Find-It-In-Front: Dr. Pinball Section

The inside cover & the front pages
DR. ❶ thru DR. ⑩ covers the basics...

Find the answers to your questions here...
If you still need help, give us a call!

STERN PINBALL, INC.

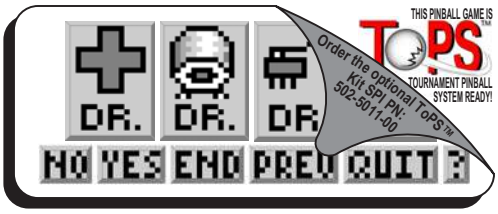

The Portals™ Service Menu,
Section 3, is your Technical Friend...

Richard Childress: ®RCR / ®Kevin Harvick Inc. / ®GM. The "Motorcraft" trademarks, Wood Brothers Racing, Ricky Rudd's name and / or likeness used by authority of Roush Racing, Livonia, MI. *Miller Brewing Company:* MILLER LITE & LITE are registered trademarks of Miller Brewing Co., used under license. *RWI Productions, LLC:* ® Rusty Wallace, Inc.

Optional Alternate Backglass Film
is available if the
Miller Lite Logo is ***not appropriate*** for your location
*(see Page **61** for Part Numbers)*

NASCAR® Pinball © 2005 Stern® Pinball, Inc. PLD® Pat Lawlor Design, Inc. All Rights Reserved. **NASCAR®** is a registered trademark of the National Association for Stock Car Auto Racing, Inc.

Joe Blackwell
DIRECTOR,
Parts Sales &
Technical Support

Patty Schraps
Stock Room
SUPERVISOR

Dorothy Brown
Parts Sales
REPRESENTATIVE

Your Parts Sales & Technical Support Team

Chas Siddiqi
Technical Support
ENGINEER

Patrick Powers
Technical Support
ENGINEER

J. Alfer
Technical Support
Documentation
ADMINISTRATOR

Pinball Service Game Manual

Please call, eMail or visit us online for technical support, questions or comments regarding this pinball game.

*Go to **www.sternpinball.com** and click **Tech. Support & Parts Sales*** Tech Support & Parts Sales *Once there, you will find **Service Bulletins**, **ROM Code**, **Parts**, **Appendixes**, **Coin Cards**, **helpful information** and much more!*

• *Toll-Free:* **1-800-KICKERS (542-5377)** *or* **1-708-345-7700** • *eMail:* **parts.service@sternpinball.com** •

Stern® Pinball, Inc.
All Rights Reserved.
Printed in the U.S.A.
July 2005

SPI Part Number
780-5086-00

For Proper Operation of this Pinball Game, (4) Pinballs must be installed in the Ball Trough!

NASCAR

Car Target Drive, Left & Right Diverter Assemblies:

If reassembling, pay close attention to the Procedure Decals for the correct adjustments.

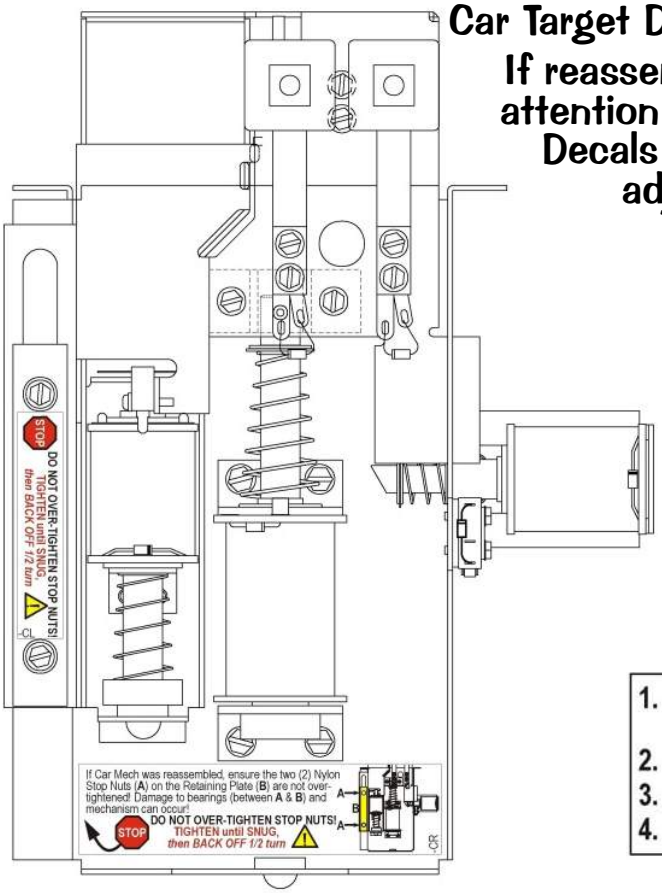

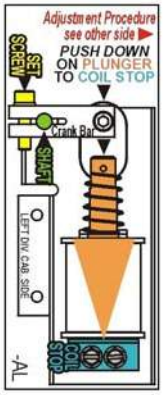

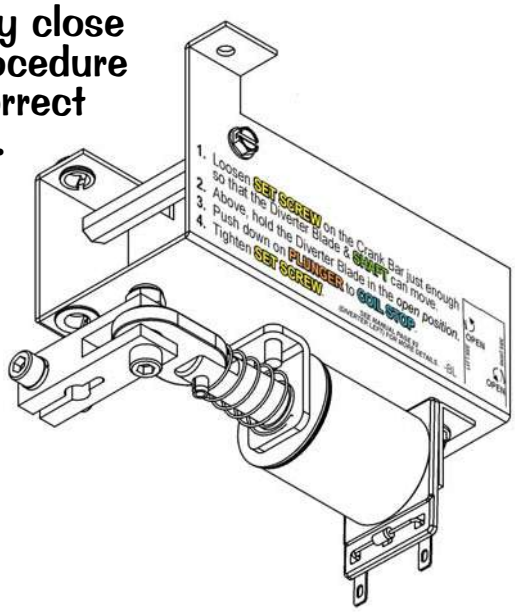

1. Loosen **SET SCREW** on the Crank Bar just enough so that the Diverter Blade & **SHAFT** can move.
2. Above, hold the Diverter Blade in the *open position*.
3. Push down on **PLUNGER** to **COIL STOP**.
4. Tighten **SET SCREW**.

SEE MANUAL PAGE 92 (DIVERTER LEFT) FOR MORE DETAILS. -BL

LEFT SIDE — OPEN — RIGHT SIDE — OPEN

If Car Mech was reassembled, ensure the two (2) Nylon Stop Nuts (**A**) on the Retaining Plate (**B**) are not over-tightened! Damage to bearings (between **A** & **B**) and mechanism can occur!

STOP **DO NOT OVER-TIGHTEN STOP NUTS!** *TIGHTEN until SNUG, then BACK OFF 1/2 turn* ⚠

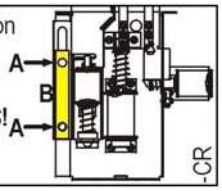

More details on these assemblies in the ***BLUE PAGES****. See Section* ***4****, Chapter* ***2****, Drawings for Major Assemblies & Ramps, Diverter (Left & Right) ... Parts, Pages* ***92-93*** *& Car Target Drive ... Parts, Pages* ***98-99***

LOOK

Exiting **Portals™** or turning game on/off will start the *Power-Up Routine.* Upon **Power-Up**, ***HOLD IN THE RIGHT FLIPPER BUTTON*** to view the CPU Game & Display Code Versions (+ Check-Sums), followed by the Location & Game ID Numbers and Alerts, if any *(see Sec.* ***3****, Chp.* ***2****,* ***GO TO DIAGNOSTICS MENU****,* ***Technician Alerts****).*

LOOK

TOUR

Look over the TOURNAMENT MENU in Portals™!
Read over Section ***3****, Chapter* ***7****, Pages* ***53-57****.*

TOUR

An Optional Tournament Kit is required for this ToPS™ Ready Pinball Game.
You can now easily set-up, start and end Tournaments for cash, tokens, tickets or points!

Set-up Tournaments...

2 personal messages can be added ...

New to our Pinball Games?

Don't forget to go over **Section 3, Chapter 1, Portals™ Service Menu Introduction**. *If using Diagnostics...very useful!* Got confused? Comments? Questions? Call Technical Support at 800-542-5377 or 708-345-7700 (Option 1).

Backbox PCB Fuses, ROMs, Bridges, Relays, P/F & Cabinet Fuses, Cab. Switches

CAUTION: *For continued protection against risk of fire, replace only with same type of fuse having the same electrical rating!*

QUICK REFERENCE FUSE CHART

Backbox Fuses			
LOC:	**DISPLAY POWER SUPPLY (P.S.) BOARD**		
F1	¾A250v S.B.	90v DC	High Voltage Display
LOC:	**I / O POWER DRIVER BOARD**		
F6	7A 250v S.B.	50v DC	Primary High Power Coils/Flippers
F7	5A 250v S.B.	20v DC	Low Power Coils
F8	5A 250v S.B.	12v DC	Logic Power
F9	5A 250v S.B.	12v DC	Logic Power
F20	4A 250v S.B.	50v DC	Magnets
F21	3A 250v S.B.	50v DC	Coils
F22	8A 250v S.B.	18v DC	Controlled Lamps
F23	4A 250v S.B.	5v DC	Logic
F24	5A 250v S.B.	6.3v AC	G.I. Lamps (BRN-WHT⇆WHT-BRN)
F25	5A 250v S.B.	6.3v AC	G.I. Lamps (YEL⇆WHT-YEL)
F26	5A 250v S.B.	6.3v AC	G.I. Lamps (GRN⇆WHT-GRN)
F27	5A 250v S.B.	6.3v AC	G.I. Lamps (VIO⇆WHT-VIO)
F28	3A 250v S.B.	24v AC	**Not Used / Spare**
Cabinet Fuses			
LOC:	**SERVICE (AC) OUTLET BOX (Cabinet Bottom)**		
n/a	8A 250v S.B.	115v AC	Main Fuse Line (Domestic or USA)
n/a	5A 250v S.B.	220v AC	Main Fuse Line (International)
Playfield (P/F) Fuses			
LOC:	**UNDER PLAYFIELD *(near the assembly)***		
n/a	3A 250v S.B.	50v DC	Right Flipper (BLU-YEL⇆RED-YEL)
n/a	3A 250v S.B.	50v DC	Left Flipper (GRY-YEL⇆RED-YEL)
n/a	3A 250v S.B.	50v DC	Up/Dn Car Mech (GRY-GRN⇆BLU-BLK)

*For locations & more information on fuses, see Sec. **5**, Chapter **2**.*

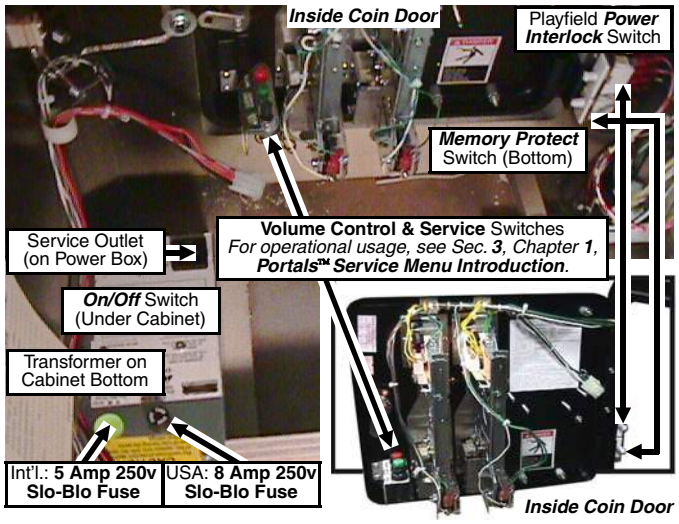

ROM TYPE on BD	LOCATION	SIZE	PART NUMBER
CPU Sound	U7	512K	965-0429-86
CPU Game	U210	1 MB	965-0430-86
CPU Voice ROM 1	U17	8 MB	965-0431-86
CPU Voice ROM 2	U21	8 MB	965-0432-86
CPU Voice ROM 3	U36	8 MB	965-0433-86
CPU Voice ROM 4	U37	8 MB	965-0434-86
DISPLAY Controller	U5	4 MB	965-0435-86

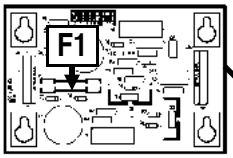

◀ Display Power Supply Bd.

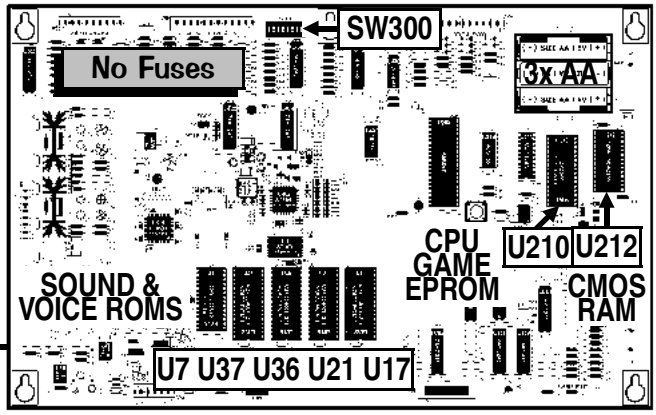

Solenoid Expander Board ‡

Tournament Interface Board ‡

‡ UK or Tournament GAMES ONLY

*For more info., see Section **5**, Chp. **4**, **PCBs** (Yellow Pages)*

For Schematics and/or Component Parts on PC Boards shown on this page, review Section 5, Chapter 4, Printed Circuit Boards (The Yellow Pages).

CPU/Sound Bd. II w/ATMEL ▲

I/O Power Driver Board ▼

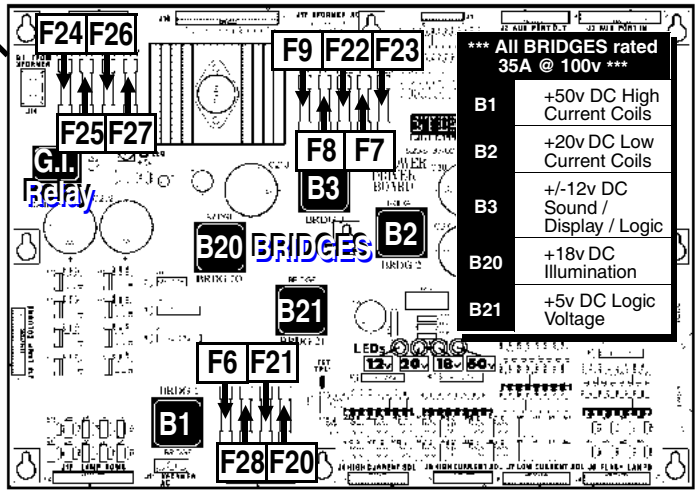

Display Controller Bd. ▶

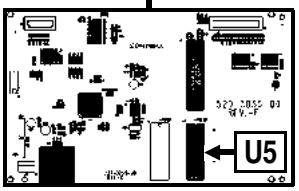

The Display Controller has the Display EPROM (Location: U5 / ROM 0). This board is located behind the 128 X 32 Dot Matrix Display Board.

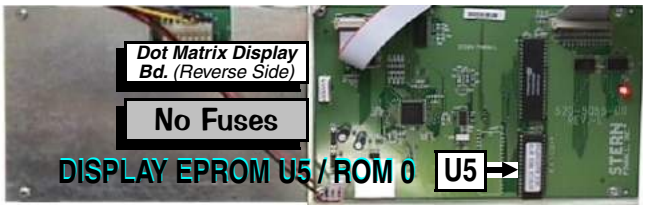

FIND-IT-IN-FRONT: Dr. Pinball Section Explained

The key technical data from various parts of the manual were extracted and combined into the **"Find- It-In-Front: Dr. Pinball Section."** This section (pages **DR. ❶ - ❿**) will assist the technician in locating important technical information needed to troubleshoot the Pinball Machine. **Dr. Pinball** is also available in a Flow Chart Help Format in the Game Display. To access, enter the **Portals™ Service Menu**.

How It Works

First, the operator / technician must enter the ***Service Menu Mode*** *(for a complete description of the* ***Portals™ Service Menu*** *and* ***ICONS Read!*** *Section* ***3****, Chapter* ***1****).* To get into the ***Service Menu Mode***, power-up the game *(if not already)* and open the **Coin Door**. On the **Coin Door** is the **Portals™ Service Switch Set** (**Red**, **Green** & **Black Buttons**).

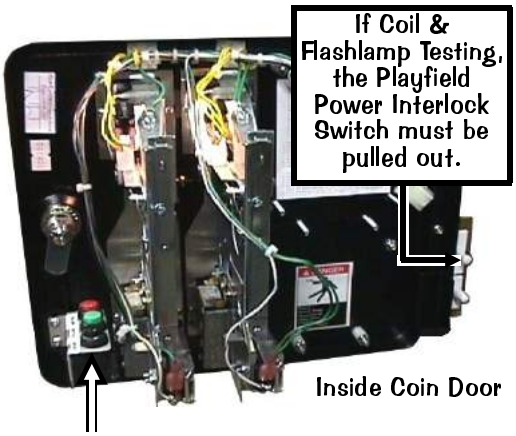

Step 1: Push down the **Black "BEGIN TEST" Button**. Looking at the Video Display you will momentarily see the introductory screen followed by the **MAIN MENU**.

Step 2: Move through the Menus by pushing the **Red "LEFT"** or **Green "RIGHT" Buttons**.

Step 3: Select or activate the *Icons* by pushing the **Black "ENTER" Button**.

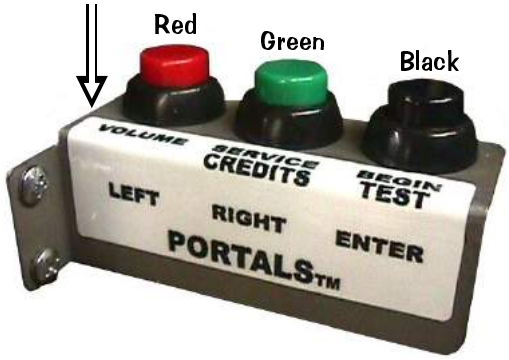

While in the **Portals™ Service Menu**, the **Start Button** can be used in lieu of the **Black Button**; the **Left** & **Right Flipper Buttons** can be used in lieu of the **Red** & **Green Buttons**. However, in *Switch* or *Active Switch Tests* ***only*** the **Red** & **Green Buttons** can be used.

In our **Portals™ Service Menu**, selecting the "DR." *Icon* will bring the operator/technician into **DR. PINBALL** (**Flow Chart Menus**), the "on-screen" diagnostic aide. This is a feature that will allow you to utilize the power of the micro-processor assisting in troubleshooting a problem with the machine in a **Flow Chart** format *(follow the questions & answer by using the Mini-Icons in the display).*

After entering **Portals™**, the **MAIN MENU** now appears with the "DIAG" *Icon* (**GO TO DIAGNOSTICS MENU**) flashing; press the **Black "ENTER" Button** to *activate* this **ICON**. The **DIAGNOSTICS MENU** now appears with the "SW" *Icon* (**GO TO SWITCH MENU**) flashing; use the **Red "LEFT"** or **Green "RIGHT" Buttons**, until the "DR." *Icon* (**DR. PINBALL**) is flashing:

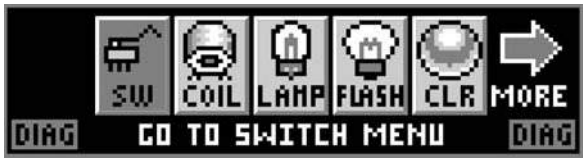

Press the **Black "ENTER" Button** to *activate* this **ICON**. The **DR. PINBALL MENU** (**Flow Chart Menus**) now appears with the COIL "DR." *Icon* flashing. Three (3) *Icons,* Coil "DR.", Switch "DR." and Lamp "DR." are available for selection. Selecting a particular *Icon* will give you a choice of which specific **Coil (Solenoid)**, **Switch** or **Lamp Circuit** needs to be diagnosed.

After selection, *Dr. Pinball* will now display a question or a procedure to follow, such as *"Does the lamp turn on?"* or *"Check bridge rectifier BR-20, if short replace."* When *Dr. Pinball* displays a question or requests a procedure, *Dr. Pinball* will expect a response such as "NO" or "YES". You the operator/technician must respond by using the **Red** or **Green Buttons** to "SELECT" a *Mini-Icon* and the **Black Button** to "ACTIVATE or ENTER" your selection.

For Mini-Icons explanations & details, see the end of Section ***3****, Chapter* ***2****,* ***GO TO DIAGNOSTICS MENU****,* ***Dr. Pinball****.*

DIAGNOSTIC AIDS

OPEN THE DOOR

If this ***display flashes***, the game is indicating that **CMOS RAM** memory *(CPU Loc. **U212**)* has been corrupted. This is caused be either failure in memory *(e.g. batteries are dead and/or faulty **RAM**)* or upon installation of updated version of game code. Opening the **Coin Door** will initiate a *Factory Restore (Reset)*, by opening the ***Memory Protect Switch***. Check battery voltage at **VBATT Test Point** on the **CPU/Sound Bd.** *(more details in Section **5**, Chapter **4**, **PCBs**).*

OPERATOR ALERT!
#2 AUTO LAUNCH
COIL MALFUNCTION

This ***display*** is shown momentarily during **Game Mode** or **Power-Up** to alert the operator of a coil malfunction *(coil doesn't energize or coil fires a multiple number of times)*. **OPERATOR ALERT!** works by monitoring any *switch activated coil* that has the potential to trap a ball when disabled *(e.g. in the Auto Launch, Scoop, Eject, etc.)*. This alert can also appear if a switch associated with a coil *(e.g. #16 Shooter Lane & #2 Auto Launch)* is stuck closed *(caused by a switch jam or stuck ball)*; the **CPU/Sound Board** will activate the coil approximately ten times and if the switch remains closed, the game will report this switch in **Technician Alerts** & will indicate the *following display warning:*

PLEASE CHECK
TECH REPORT
PORTALS->DIAG->TECH

If this ***Tech Report Alert flashes*** *(along with an audible sound)*, the game has detected faulty switches and/or missing pinballs. Select the "TECH" *Icon* for information *(review **Technician Alerts**, **Pages 24-25**)*. *For this **Alert display** to appear, Standard Adj. **49**, **must be changed** to **POWERUP**, **COIN DOOR** or **POWERUP AND COIN DOOR**, the default is **NEVER** (review Section **3**, Chp. **4**, **GO TO ADJUSTMENTS MENU**, Standard Adjustments, Page **44**).*

CPU DIP SWITCH SETTINGS

Location of Dip Switch [SW300] is on the CPU/Sound Board (Right of CN6, Top Middle)

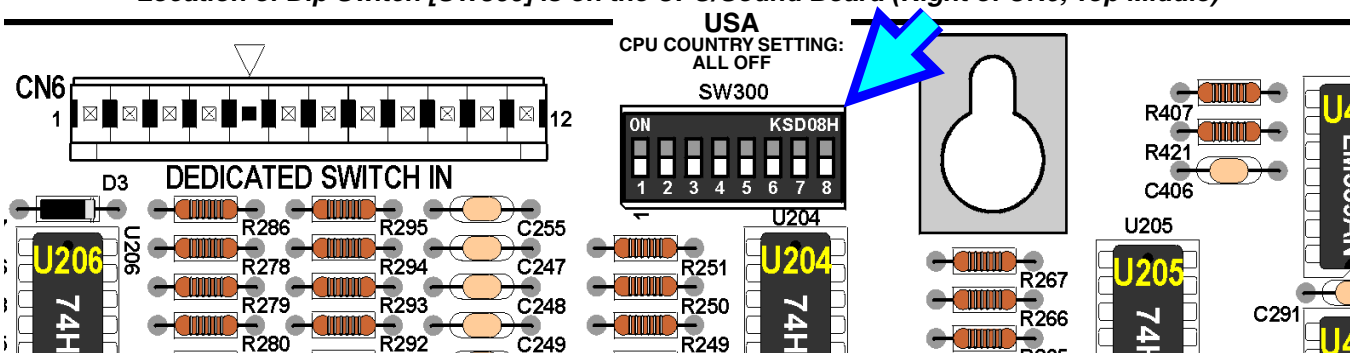

CPU COUNTRY SETTING: Austria	1	2	3	4	5	6	7	8
ON	▲							
OFF		▼	▼	▼	▼	▼	▼	▼

CPU COUNTRY SETTING: Germany	1	2	3	4	5	6	7	8
ON	▲	▲	▲					
OFF				▼	▼	▼	▼	▼

CPU COUNTRY SETTING: Portugal	1	2	3	4	5	6	7	8
ON	▲				▲			
OFF		▼	▼	▼		▼	▼	▼

CPU COUNTRY SETTING: Australia	1	2	3	4	5	6	7	8
ON	▲		▲	▲				
OFF		▼			▼	▼	▼	▼

CPU COUNTRY SETTING: Greece	1	2	3	4	5	6	7	8
ON	▲	▲	▲	▲				
OFF					▼	▼	▼	▼

CPU COUNTRY SETTING: Russia	1	2	3	4	5	6	7	8
ON	▲			▲	▲			
OFF		▼	▼			▼	▼	▼

CPU COUNTRY SETTING: Belgium	1	2	3	4	5	6	7	8
ON		▲						
OFF	▼		▼	▼	▼	▼	▼	▼

CPU COUNTRY SETTING: Italy	1	2	3	4	5	6	7	8
ON				▲				
OFF	▼	▼	▼		▼	▼	▼	▼

CPU COUNTRY SETTING: So. Africa	1	2	3	4	5	6	7	8
ON			▲		▲			
OFF	▼	▼		▼		▼	▼	▼

CPU COUNTRY SETTING: Canada	1	2	3	4	5	6	7	8
ON	▲	▲						
OFF			▼	▼	▼	▼	▼	▼

CPU COUNTRY SETTING: Japan	1	2	3	4	5	6	7	8
ON	▲		▲		▲			
OFF		▼		▼		▼	▼	▼

CPU COUNTRY SETTING: Spain	1	2	3	4	5	6	7	8
ON		▲			▲			
OFF	▼		▼	▼		▼	▼	▼

CPU COUNTRY SETTING: Croatia	1	2	3	4	5	6	7	8
ON		▲	▲		▲			
OFF	▼			▼		▼	▼	▼

CPU COUNTRY SETTING: Middle East	1	2	3	4	5	6	7	8
ON	▲	▲	▲		▲			
OFF				▼		▼	▼	▼

CPU COUNTRY SETTING: Sweden	1	2	3	4	5	6	7	8
ON	▲	▲		▲				
OFF			▼		▼	▼	▼	▼

CPU COUNTRY SETTING: Denmark	1	2	3	4	5	6	7	8
ON	▲			▲				
OFF		▼	▼		▼	▼	▼	▼

CPU COUNTRY SETTING: Netherlands	1	2	3	4	5	6	7	8
ON			▲					
OFF	▼	▼		▼	▼	▼	▼	▼

CPU COUNTRY SETTING: Switzerland	1	2	3	4	5	6	7	8
ON			▲	▲				
OFF	▼	▼			▼	▼	▼	▼

CPU COUNTRY SETTING: Finland	1	2	3	4	5	6	7	8
ON	▲		▲					
OFF		▼		▼	▼	▼	▼	▼

CPU COUNTRY SETTING: New Zealand	1	2	3	4	5	6	7	8
ON					▲			
OFF	▼	▼	▼	▼		▼	▼	▼

CPU COUNTRY SETTING: Taiwan	1	2	3	4	5	6	7	8
ON				▲	▲			
OFF	▼	▼	▼			▼	▼	▼

CPU COUNTRY SETTING: France	1	2	3	4	5	6	7	8
ON		▲	▲					
OFF	▼			▼	▼	▼	▼	▼

CPU COUNTRY SETTING: Norway	1	2	3	4	5	6	7	8
ON		▲		▲				
OFF	▼		▼		▼	▼	▼	▼

CPU COUNTRY SETTING: UK	1	2	3	4	5	6	7	8
ON		▲	▲	▲				
OFF	▼				▼	▼	▼	▼

SWITCH MENU: SWITCH, ACTIVE & DEDICATED

SWITCH MATRIX GRID, DEDICATED SWITCHES & LOCATIONS

Column (Drive) / Row (Return)	1: Q1 GRN-BRN CN5-P1	2: Q2 GRN-RED CN5-P3	3: Q3 GRN-ORG CN5-P4	4: Q4 GRN-YEL CN5-P5	5: Q5 GRN-BLK CN5-P6	6: Q6 GRN-BLU CN5-P7	7: Q7 GRN-VIO CN5-P8	8: Q8 GRN-GRY CN5-P9
1: U400 WHT-BRN CN7-P9	1 Cabinet Side LT BUTTON (UK ONLY) 180-5160-01	9 NOT USED	17 Below P/F TOP DROP TARGET DOTS 180-5158-00	25 Below P/F RIGHT ORBIT 500-6227-02	33 Above P/F LEFT SPINNER 180-5010-04	41 NOT USED	49 Below P/F LEFT BUMPER 180-5015-04	57 Below P/F LEFT OUTLANE 500-6227-01
2: U400 WHT-RED CN7-P8	2 Coin Door 4TH COIN SLOT 180-5204-00	10 NOT USED	18 Below P/F MIDDLE DROP TARGET DOTS 180-5158-00	26 Below P/F LEFT ORBIT 500-6227-02	34 Above P/F LOWER ACCELERATOR RIGHT (OPTO) *See Sw. 34 Note*	42 Above P/F RIGHT SPINNER 180-5010-04	50 Below P/F RIGHT BUMPER 180-5015-04	58 Below P/F LEFT RETURN LANE 500-6227-02
3: U400 WHT-ORG CN7-P7	3 Coin Door 6TH COIN SLOT *Future Use*	11 Below P/F 4-BALL TROUGH #1 (LEFT) 180-5119-02	19 Below P/F BOTTOM DROP TARGET DOTS 180-5158-00	27 Below P/F PIT LOCK MIDDLE 180-5179-00	35 Above P/F LOWER ACCELERATOR MID. (OPTO) *See Sw. 35 Note*	43 Below P/F RIGHT STANDUP 500-5857-06	51 Below P/F BOTTOM BUMPER 180-5015-04	59 Below P/F LEFT SLINGSHOT 180-5054-00 (x2)
4: U400 WHT-YEL CN7-P6	4 Coin Door RIGHT COIN SLOT 180-5204-00	12 Below P/F 4-BALL TROUGH #2 180-5119-02	20 Above P/F WINDMILL MOTOR OPTO *See Sw. 20 Note*	28 Below P/F PIT LOCK TOP 180-5178-00	36 Below P/F TEST CAR STANDUP X2 515-5162-06	44 Below P/F CENTER STANDUP 500-5857-06	52 Below P/F GARAGE VUK DOTS 180-5116-01	60 Below P/F RIGHT OUTLANE 500-6227-02
5: U401 WHT-GRN CN7-P5	5 Coin Door CENTER COIN SLOT / DBA 180-5204-00	13 Below P/F 4-BALL TROUGH #3 180-5119-02	21 Backpanel LEFT RAMP MAKE OPTO *See Sw. 21 Note*	29 Below P/F MIDWAY EJECT DOTS 180-5116-01	37 Above/Below LOWER ACCELERATOR LEFT (OPTO) See Sw. 37 Note	45 Below P/F LEFT STANDUP 500-5857-06	53 In Cabinet *SLAM TILT (OPT)* KIT 180-	61 Below P/F RIGHT RETURN LANE 500-6227-01
6: U401 WHT-BLU CN7-P3	6 Coin Door LEFT COIN SLOT 180-5204-00	14 Below P/F 4-BALL TROUGH VUK OPTO *See Sw. 14 Note*	22 NOT USED	30 Below P/F TRACK EXIT POPPER DOTS 180-5116-01	38 Below P/F CAPTIVE BALL STANDUP 500-5232-06	46 NOT USED	54 In Cabinet START BUTTON 180-5174-00	62 Below P/F RIGHT SLINGSHOT 180-5054-00 (x2)
7: U401 WHT-VIO CN7-P2	7 **Coin Door** 5TH COIN SLOT *Future Use*	15 **Below P/F** 4-BALL STACKING OPTO *See Sw. 15 Note*	23 Above P/F TRUCK RAMP KICKER 180-5057-00	31 NOT USED	39 Below P/F CAR MECH DOWN 180-5201-00	47 Above P/F UPPER ACCELERATOR TOP (OPTO) See Sw. 47 Note	55 In Cabinet *TOURNA-MENT START* KIT 180-5174-00	63 NOT USED
8: U401 WHT-GRY CN7-P1	8 Cabinet Side RT BUTTON (UK ONLY) 180-5160-01	16 Above P/F SHOOTER LANE 180-5200-00	24 Above P/F RIGHT RAMP (TO) DIVERTER 180-5010-04	32 Above/Below PIT LOCK BOTTOM (OPTO) See Sw. 32 Note	40 Below P/F TEST CAR 180-5010-04	48 Above/Below UPPER ACCELERATOR BOT. (OPTO) See Sw. 48 Note	56 In Cabinet PLUMB BOB TILT *See Sw. 56 Note*	64 NOT USED

GROUND / IC U206 INPUTS	GROUND BLK CN6-P1, -P11
1: U206 GRY-BRN CN6-P2	DS-1 on Cabinet Side #1 LEFT FLIPPER BUTTON 180-5160-01
2: U206 GRY-RED CN6-P3	DS-2 Below Playfield #2 LEFT FLIPPER E.O.S (End-of-Stroke) 180-5149-00 *on Flipper*
3: U206 GRY-ORG CN6-P4	DS-3 on Cabinet Side #3 RIGHT FLIPPER BUTTON 180-5160-01
4: U206 GRY-YEL CN6-P6	DS-4 Below Playfield #4 RIGHT FLIPPER E.O.S. (End-of-Stroke) 180-5149-00 *on Flipper*
5: U206 GRY-GRN CN6-P7	DS-5 NOT USED
6: U206 GRY-BLU CN6-P8	DS-6 on Coin Door #6 VOLUME (RED BUTTON) (In Test: LEFT) 180-5192-02
7: U206 GRY-VIO CN6-P9	DS-7 on Coin Door #7 SERV. CRED. (GREEN BUTTON) (In Test: RIGHT) 180-5192-04
8: U206 GRY-BLK CN6-P10	DS-8 on Coin Door #8 BEGIN TEST (BLACK BUTTON) (In Test: ENTER) 180-5192-00

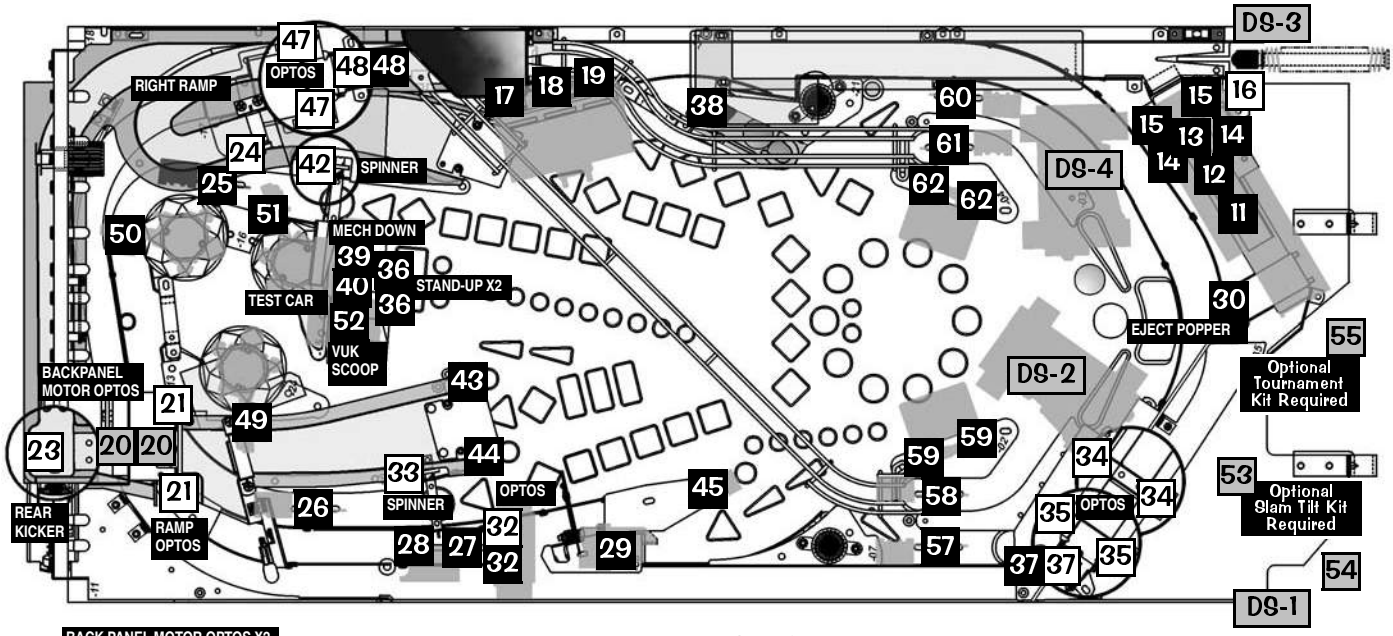

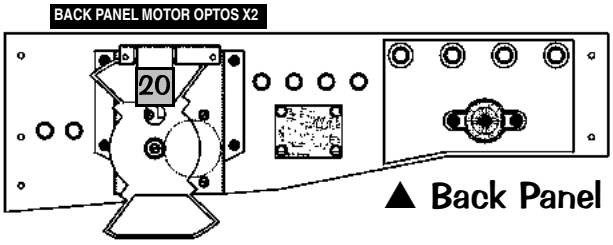

▲ Back Panel

Playfield ▲

= Switches above Playfield.
= Switches below Playfield.
= Switches not on Playfield.

Switch Part Notes: *¥ Yen Coin Switch is 180-5091-00. Part Numbers which start with 515- or 500- include the bracket, target, and/or housing.* ***Switches 14, 15, 18, 23 & 24 Part Note:*** *Transmitter & Receiver OPTO PC Boards are used as Switches: Transmitter: 515-0173-00 (Sw. 14 & 15); Receiver: 515-0174-00 (Sw. 14 & 15); Transceiver: 500-6775-00 (Qty. 2/per) (Sw. 20, 21, 32, 34, 35, 37, 47 & 48 see Pages* ***148-151*** *for more details)* ***Sw. 56 Part Note:*** *The Switch is comprised of a Hanger Bracket (535-5319-00) and Contact Wire (535-7563-01) located in the Cabinet.* ***Some Switch Diodes may be located under the playfield, in the Cabinet*** *or* ***Backbox*** *on Terminal Strips* ***or*** *Diode Boards and not on the assemblies.* **DOTS: Diode On Terminal Strip,** *see Sec.* ***5****, Chp.****2****,* ***Playfield Wiring****.*

NASCAR®
Find-It-In-Front: Dr. Pinball

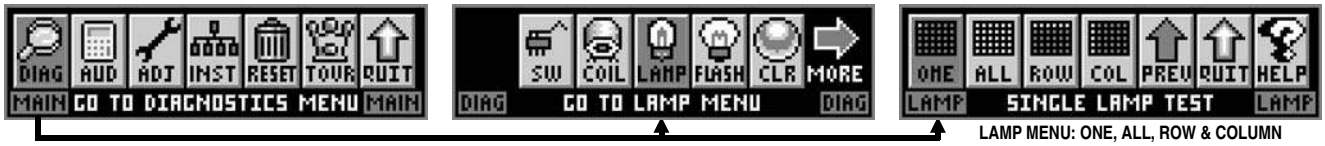

LAMP MENU: ONE, ALL, ROW & COLUMN

LAMP MATRIX GRID & LOCATIONS*

Row (Ground) \ Column (18v)	1: U17 YEL-BRN J13-P9	2: U16 YEL-RED J13-P8	3: U15 YEL-ORG J13-P7	4: U14 YEL-BLK J13-P6	5: U13 YEL-GRN J13-P5	6: U12 YEL-BLU J13-P4	7: U11 YEL-VIO J13-P3	8: U10 YEL-GRY J13-P1
1: Q33 RED-BRN J12-P1	1 #44 Clear Bulb RACE POSITION 10	2 #555 Clear Bulb VICTORY LAP	3 #555 Clear Bulb HAPPY HOUR*	4 #555 Clear Bulb 100K	5 #555 Clear Bulb STANDUP LEFT	6 #555 Clear Bulb (R) ACE	7 #555 White LED LEFT POP DOTS	8 #555 Clear Bulb SPECIAL & MILLIONS
2: Q34 RED-BLK J12-P2	9 #555 Clear Bulb RACE POSITION 9	10 #555 Clear Bulb ROAD COURSE*	11 #555 Clear Bulb INFIELD PARTY	12 #555 Clear Bulb 150K	13 #555 Clear Bulb 100K	14 #555 Clear Bulb R (A) CE	15 #555 White LED RIGHT POP DOTS	16 #555 Clear Bulb GARAGE
3: Q35 RED-ORG J12-P3	17 #44 Clear Bulb RACE POSITION 8	18 #555 Clear Bulb 2X HAULER MILES	19 #555 Clear Bulb SHORT TRACK*	20 #555 Clear Bulb 200K	21 #555 Clear Bulb 150K	22 #555 Clear Bulb RA (C) E	23 #555 White LED BOTTOM POP DOTS	24 #555 Clear Bulb FUEL
4: Q36 RED-YEL J12-P4	25 #555 Clear Bulb RACE POSITION 7	26 #555 Clear Bulb COLLECT R-A-C-E	27 #44 Clear Bulb TEST CAR	28 #555 Clear Bulb 250K	29 #555 Clear Bulb 200K	30 #555 Clear Bulb RAC (E)	31 #44 Clear Bulb (C) HAMP #1	32 #44 Yellow Bulb PIT ROAD SIGN
5: Q37 RED-GRN J12-P5	33 #44 Clear Bulb RACE POSITION 6	34 #555 Clear Bulb JACK POT	35 #555 Clear Bulb HAULER RIDE	36 #555 Clear Bulb HARD RACING	37 #555 Clear Bulb 250K	38 #555 Clear Bulb SPIN	39 #44 Clear Bulb C (H) AMP #1	40 #44 Clear Bulb MOVE UP
6: Q38 RED-BLU J12-P6	41 #555 Clear Bulb RACE POSITION 5	42 #555 Clear Bulb BONUS JACKPOT	43 #555 Clear Bulb LIGHT EXTRA BALL	44 #555 Clear Bulb COLLECT R-A-C-E	45 #555 Clear Bulb SPEED SHOTS	46 #555 Clear Bulb JACK POT	47 #44 Clear Bulb CH (A) MP #1	48 #555 Clear Bulb CHAMP #1
7: Q39 RED-VIO J12-P8	49 #44 Clear Bulb RACE POSITION 4	50 #555 Clear Bulb MULTI BALL	51 #44 Clear Bulb BUMP 'N RUN*	52 #555 Clear Bulb JACK POT	53 #555 Clear Bulb COLLECT R-A-C-E	54 #555 Clear Bulb EXTRA BALL	55 #44 Clear Bulb CHA (M) P #1	56 #555 Clear Bulb SCANNER
8: Q40 RED-GRY J12-P9	57 #555 Clear Bulb RACE POSITION 3	58 #555 Clear Bulb LOCK	59 #555 Clear Bulb RIGHT SIDES ONLY*	60 #44 Clear (X2) SPINNERS X2 (@ MAX)	61 #555 Clear Bulb JACK POT	62 #555 Clear Bulb MODE BONUS	63 #44 Clear Bulb CHAM (P) #1	64 #555 Clear Bulb JACK POT
9: Q41 RED-WHT J12-P10	65 #44 Clear Bulb RACE POSITION 2	66 #555 Clear Bulb COLLECT R-A-C-E	67 #555 Clear Bulb SUPER FAN	68 #555 Clear Bulb 2 TO GO	69 #555 Clear Bulb LEFT RAMP STANDUP (LEFT)	70 #555 Clear Bulb COLLECT R-A-C-E	71 #44 Clear Bulb CHAMP (#1)	72 #555 Clear Bulb SHOOT AGAIN
10: Q42 RED J12-P11	73 #555 Clear Bulb RACE POSITION 1	74 #555 Clear Bulb JACK POT	75 #555 Clear Bulb GAS 'N GO*	76 #555 Clear Bulb 1 TO GO	77 #555 Clear Bulb LEFT RAMP STANDUP (RT)	78 #555 Clear Bulb SUPER JACK POT	79 *OPTIONAL* *TOURNAMENT BUTTON*	80 #555 Clear Bulb START BUTTON

Lamps 3, 10, 19, 51, 59 & 75 differ on "G-P" Playfield *(all other lamps are the same)*

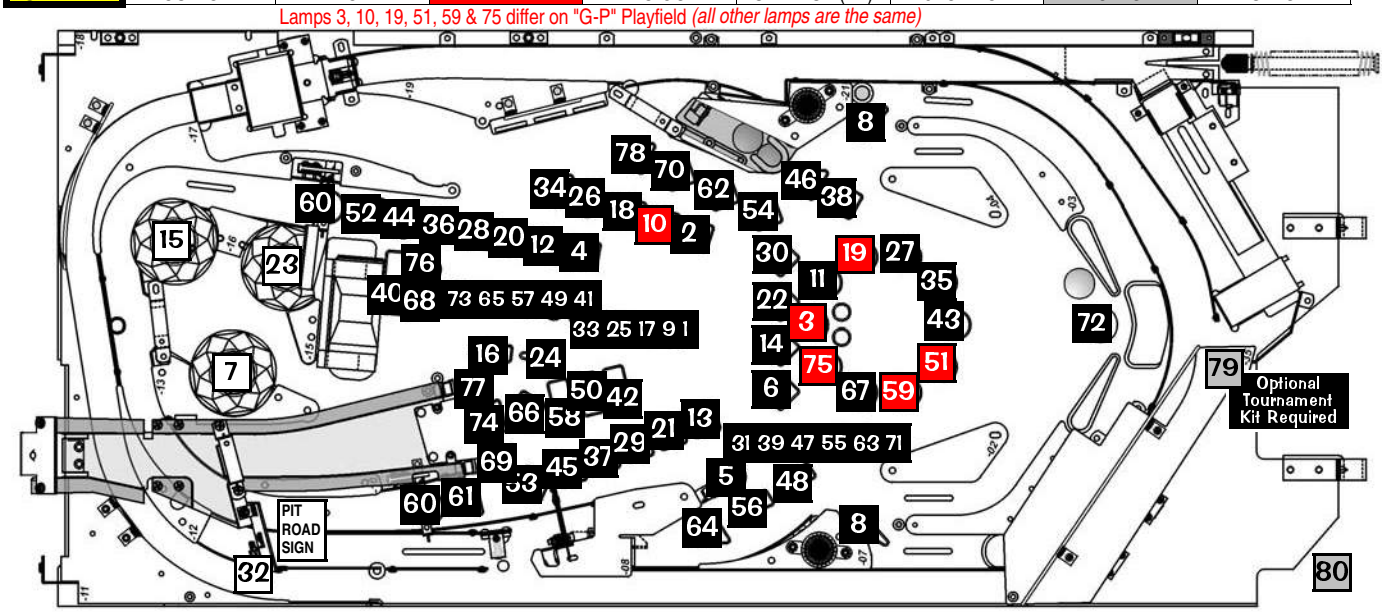

LAMPS ON BACK PANEL ARE G.I. ONLY. NO CONTROL LAMPS THIS GAME.

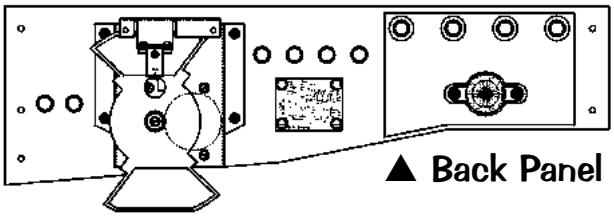

▲ Back Panel

Playfield ▲

= Lamps which differ on "G-P" Playfield *(all other lamps are the same)*

= Lamps above Playfield.

= Lamps below Playfield.

= Lamps not on Playfield.

Lamp Part Notes: *#555 Wedge Base (W.B.) Bulb Clear = 165-5002-00. #44 Bayonet Bulb (Heavy Filament) Clear = 165-5000-44-HF. #555 LED Wedge Base White = 112-5024-08*

*See Section **4**, Chapter **1**, **Parts Identification & Location**, Pages **78-80** for more details on bulbs and corresponding sockets.*

***Some Lamp Diodes may be located under the playfield, in the Cabinet** or **Backbox** on Terminal Strips and not on or with the Lamp Socket.*

DOTS: D iode O n T erminal S trip, *see Sec. **5**, Chp. **2**, **Playfield Wiring**.*

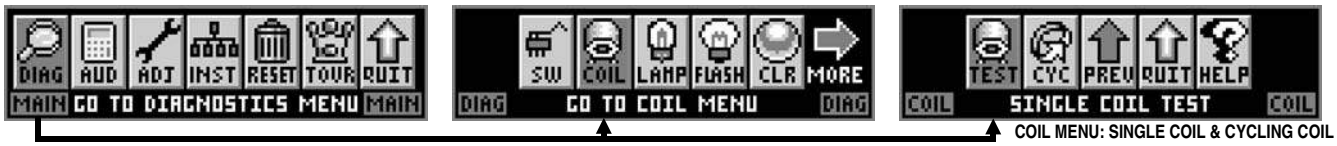

COIL MENU: SINGLE COIL & CYCLING COIL

COILS DETAILED CHART TABLE

	High Current Coils Group 1	Drive Transistor	Driver Ouput Board	Power Line Color	Power Line Connection	Power Voltage	Drive Transistor Control Line Color	D.T. Control Line Connect	Coil GA-Turn or Bulb Type
#1	TROUGH UP-KICKER	Q1	▲ I/O Power Driver ▼	YEL-VIO	J10-P4/5	50v DC	BRN-BLK	J8-P1	26-1200 ↻ 090-5044-00T
#2	AUTO LAUNCH	Q2		YEL-VIO	J10-P4/5	50v DC	BRN-RED	J8-P3	24-940 ↻ 090-5036-00B
#3	TRUCK RAMP KICKER	Q3		YEL-VIO	J10-P4/5	50v DC	BRN-ORG	J8-P4	23-800 ↻ 090-5001-00B
#4	TRUCK MOTOR DRIVE (20V)	Q4		BROWN	J7-P1	20v DC	BRN-YEL	J8-P5	Motor 20v 041-5093-00
#5	GARAGE RELEASE	Q5		YEL-VIO	J10-P4/5	50v DC	BRN-GRN	J8-P6	23-800 ↻ 090-5001-00T
#6	GARAGE KICKER	Q6		YEL-VIO	J10-P4/5	50v DC	BRN-BLU	J8-P7	23-800 ↻ 090-5001-00T
#7	TRACK EXIT POPPER	Q7		YEL-VIO	J10-P4/5	50v DC	BRN-VIO	J8-P8	23-800 ↻ 090-5001-00T
#8	MIDWAY EJECT	Q8		YEL-VIO	J10-P4/5	50v DC	BRN-GRY	J8-P9	26-1200 ↻ 090-5044-00T

	High Current Coils Group 2	Drive Transistor	Driver Ouput Board	Power Line Color	Power Line Connection	Power Voltage	Drive Transistor Control Line Color	D.T. Control Line Connect	Coil GA-Turn or Bulb Type
#9	LEFT BUMPER	Q9	▲ I/O Power Driver ▼	YEL-VIO	J10-P4/5	50v DC	BLU-BRN	J9-P1	26-1200 ↻ 090-5044-00T
#10	RIGHT BUMPER	Q10		YEL-VIO	J10-P4/5	50v DC	BLU-RED	J9-P2	26-1200 ↻ 090-5044-00T
#11	BOTTOM BUMPER DOTS	Q11		YEL-VIO	J10-P4/5	50v DC	BLU-ORG	J9-P4	26-1200 ↻ 090-5044-NL
#12	3-BANK (DROP TARGET) RESET	Q12		YEL-VIO	J10-P4/5	50v DC	BLU-YEL	J9-P5	25-1240 ↻ 090-5034-00B
#13	RIGHT RAMP DIVERTER	Q13		YEL-VIO	J10-P4/5	50v DC	BLU-GRN	J9-P6	32-1800 ↻ 090-5031-00
#14	GARAGE RAISE	Q14		YEL-VIO	J10-P4/5	50v DC	GRY-GRN~3A Fuse~BLU-BLK	J9-P7	22-1080 ↻ 090-5032-00T
#15	LEFT FLIPPER (50v RED/YEL)	Q15		GRY-YEL~3A Fuse~RED-YEL	J10-P1/2	50v DC	ORG-GRY	J9-P8	23-1100 ↻ 090-5030-00T
#16	RIGHT FLIPPER (50v RED/YEL)	Q16		BLU-YEL~3A Fuse~RED-YEL	J10-P1/2	50v DC	ORG-VIO	J9-P9	23-1100 ↻ 090-5030-00T

	Low Current Coils Group 1	Drive Transistor	Driver Ouput Board	Power Line Color	Power Line Connection	Power Voltage	Drive Transistor Control Line Color	D.T. Control Line Connect	Coil GA-Turn or Bulb Type
#17	LEFT SLINGSHOT	Q17	▲ I/O Power Driver ▼	BROWN	J7-P1	20v DC	VIO-BRN	J7-P2	23-800 ↻ 090-5001-00T
#18	RIGHT SLINGSHOT	Q18		BROWN	J7-P1	20v DC	VIO-RED	J7-P3	23-800 ↻ 090-5001-00T
#19	FLASH: UPR RIGHT (BACK PANEL)	Q19		ORANGE	J6-P10	20v DC	VIO-ORG	J7-P4	#89 Bulb 165-5000-89
#20	UPR ACCELERATOR MAG (AUX)	Q20		VIO-RED~Triple Aux~VIO-YEL	J2-P3~Triple Aux~J10-P3	50v DC	ORG~Triple Aux~VIO-YEL	J2-P7~Trp. Aux~J7-P6	22-700 ↻ 090-5071-00
#21	RIGHT TRACK EXIT DIVERTER	Q21		BROWN	J7-P1	20v DC	VIO-GRN	J7-P7	26-1200 ↻ 090-5044-00T
#22	LEFT TRACK EXIT DIVERTER	Q22		BROWN	J7-P1	20v DC	VIO-BLU	J7-P8	26-1200 ↻ 090-5044-00T
#23	INNER ORBIT POST	Q23		BROWN	J7-P1	20v DC	VIO-BLK	J7-P9	26-1200 ↻ 090-5044-00T
#24	OPTIONAL COIL	Q24		RED	J16-P7	5v DC	VIO-GRY	J7-P10	Opt. 5v

Diode **O**n **T**erminal **S**trip (if noted)

	Low Current Coils Group 2	Drive Transistor	Driver Ouput Board	Power Line Color	Power Line Connection	Power Voltage	Drive Transistor Control Line Color	D.T. Control Line Connect	Coil GA-Turn or Bulb Type
#25	LWR ACCLRTR MAG LT (AUX)	Q25	▲ I/O Power Driver ▼	VIO-RED~Triple Aux~VIO-YEL	J2-P1~Triple Aux~J10-P3	50v DC	ORG-BRN~Triple Aux~BLK-BRN	J2-P5~Triple Aux~J6-P1	22-700 ↻ 090-5071-00
#26	LWR ACCLRTR MAG RT (AUX)	Q26		VIO-RED~Triple Aux~VIO-YEL	J2-P2~Triple Aux~J10-P3	50v DC	ORG-RED~Triple Aux~BLK-RED	J2-P6~Triple Aux.~J6-P2	22-700 ↻ 090-5071-00
#27	PIT LOCK RELEASE LEFT	Q27		BROWN	J7-P1	20v DC	BLK-ORG	J6-P3	26-1200 ↻ 090-5044-00T
#28	PIT LOCK RELEASE RIGHT	Q28		BROWN	J7-P1	20v DC	BLK-YEL	J6-P4	26-1200 ↻ 090-5044-00T
#29	MIDWAY SIGN (HOT DOG)	Q29		BROWN	J7-P1	20v DC	BLK-GRN	J6-P5	32-1800 ↻ 090-5031-00
#30	FLASH: LEFT X3	Q30		ORANGE	J6-P10	20v DC	BLK-BLU	J6-P6	#89 Bulb 165-5000-89
#31	FLASH: RIGHT X3	Q31		ORANGE	J6-P10	20v DC	BLK-VIO	J6-P7	#89 Bulb 165-5000-89
#32	FLASH: TEST CAR X2	Q32		ORANGE	J6-P10	20v DC	BLK-GRY	J6-P8	#89 Bulb 165-5000-89

Note: In Test Flash Lamps Menu ("Flash" Icon), Flashers tested are all Flash Lamps located between Q1-Q32 (This Game: Q19, Q30-Q32)

	Auxiliary (UK ONLY)	Drive Transistor	Driver Ouput Board	Power Line Color	Power Line Connection	Power Voltage	Drive Transistor Control Line Color	D.T. Control Line Connect	Coil GA-Turn
	AUX 1: LEFT UP/DOWN POST	Q1	UK 3X Trans. Driver Board	BROWN	J7-P1	20v DC	WHITE	J2-P3	26-1200 ↻ 090-5044-00T
	AUX 2: CENTER UP/DOWN POST	Q2		BROWN	J7-P1	20v DC	RED	J2-P4	23-1100 ↻ 090-5030-00T
	AUX 3: RIGHT UP/DOWN POST	Q3		BROWN	J7-P1	20v DC	ORANGE	J2-P7	26-1200 ↻ 090-5044-00T

↻ **Coil Note:** ↻ Either -00**B** *or* -00**T** can be used for coil replacements. *B/T listed is preferable for easier diode access & may differ on game.*

NASCAR®

Find-It-In-Front: Dr. Pinball DR.

COIL & FLASH LAMP LOCATIONS

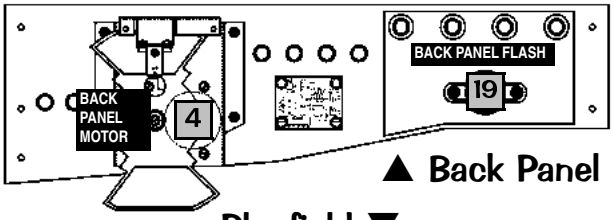

▲ Back Panel

Playfield ▼

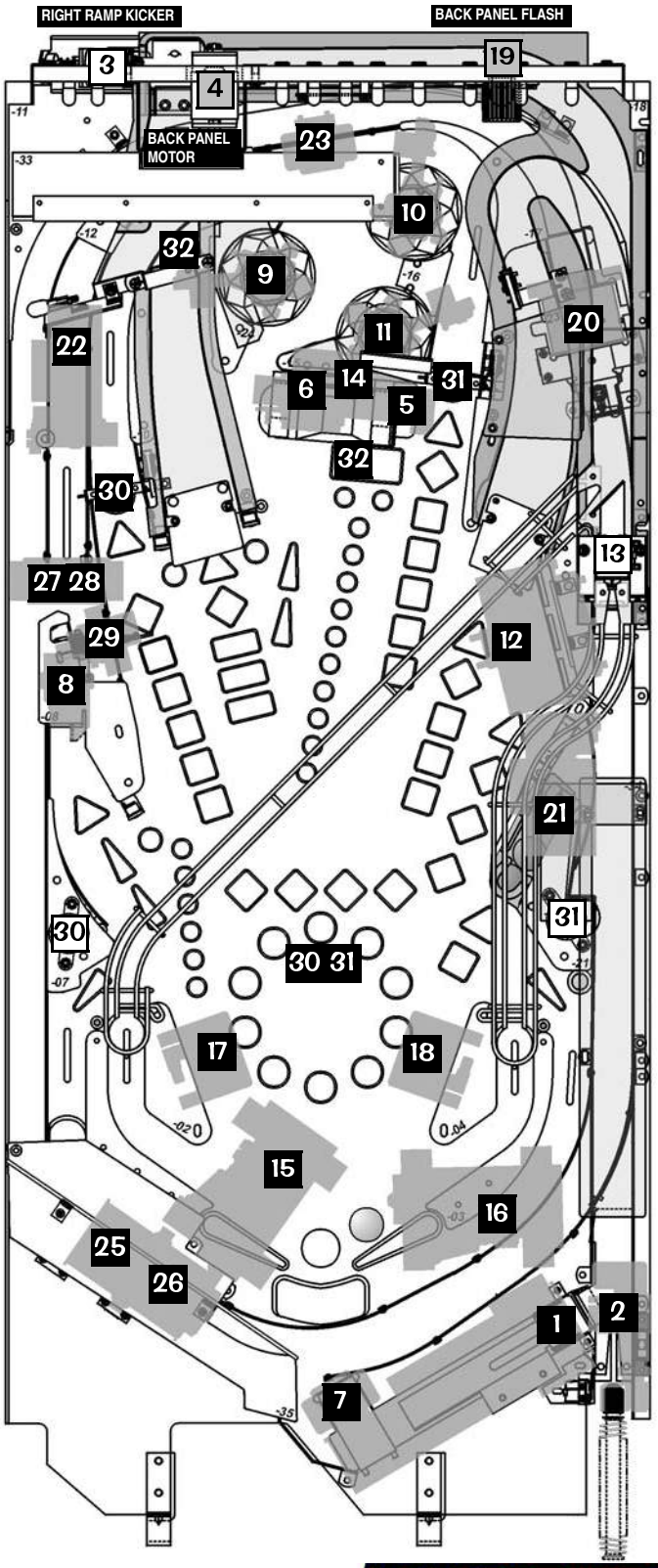

Typical Switch Wiring & Schematic

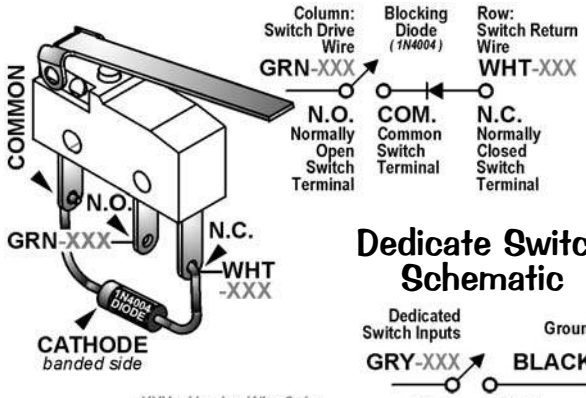

-XXX = Varying Wire Color. See Matrix Grid for color.

Dedicate Switch Schematic

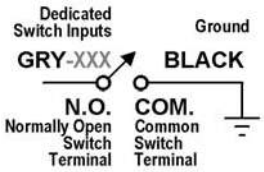

Typical Lamp Schematic & Wiring

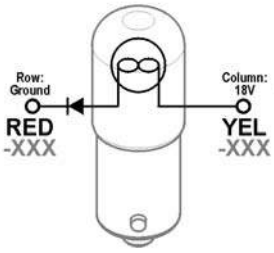

-XXX = Varying Wire Color. See Matrix Grid for color.

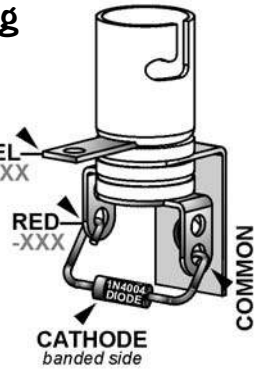

Typical Coil Wiring & Schematic

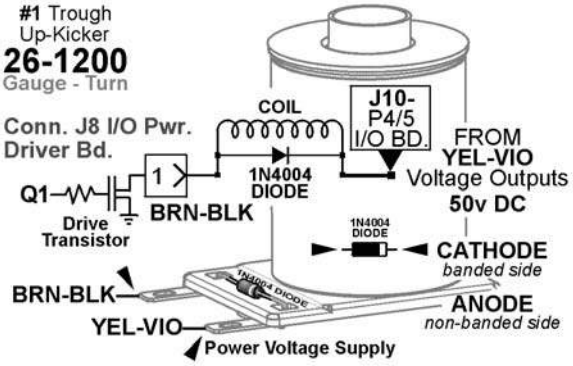

= Coils / Flash Lamps above Playfield.

= Coils / Flash Lamps below Playfield.

= Coils / Flash Lamps not on Playfield.

Color = Color of Mini-Mars of Flash Lamp Bulb.

Some Coil or Flash Lamp Diodes may be located under the playfield, in the Cabinet or Backbox *on Terminal Strips* ***or*** *Diode Boards and not on the assemblies.*
DOTS: **D**iode **O**n **T**erminal **S**trip *See Section* ***5****, Chapter* ***2****,* ***Playfield Wiring****.*

Coil Q24 is Optional. *If either a Coin Meter, Token Dispenser or Knocker (all optional equipment) is required, call Technical Support for more information, 1-800-542-5377 or 1-708-345-7700.*

Domestic Pinball & Redemption Distributors Map

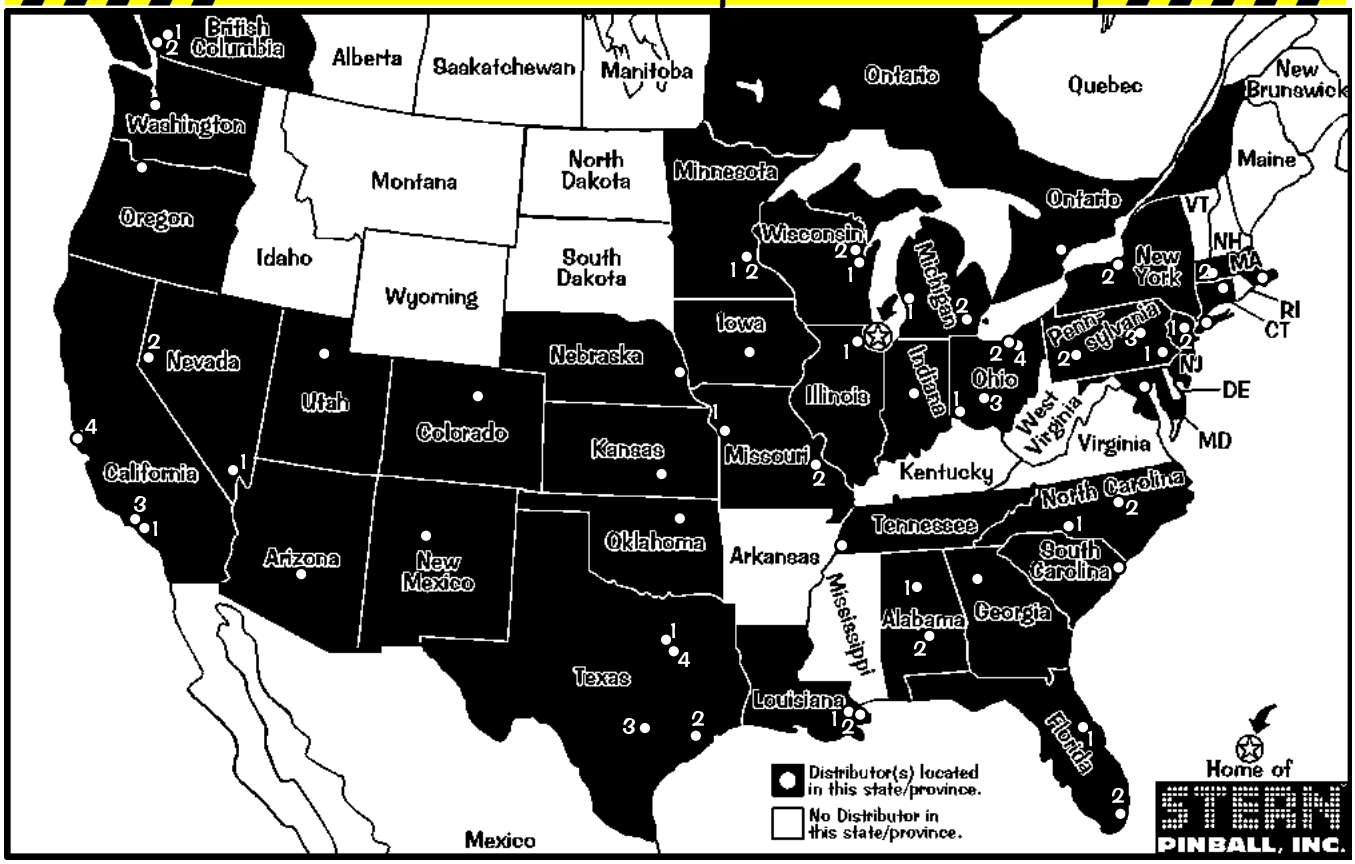

International Distributors Map

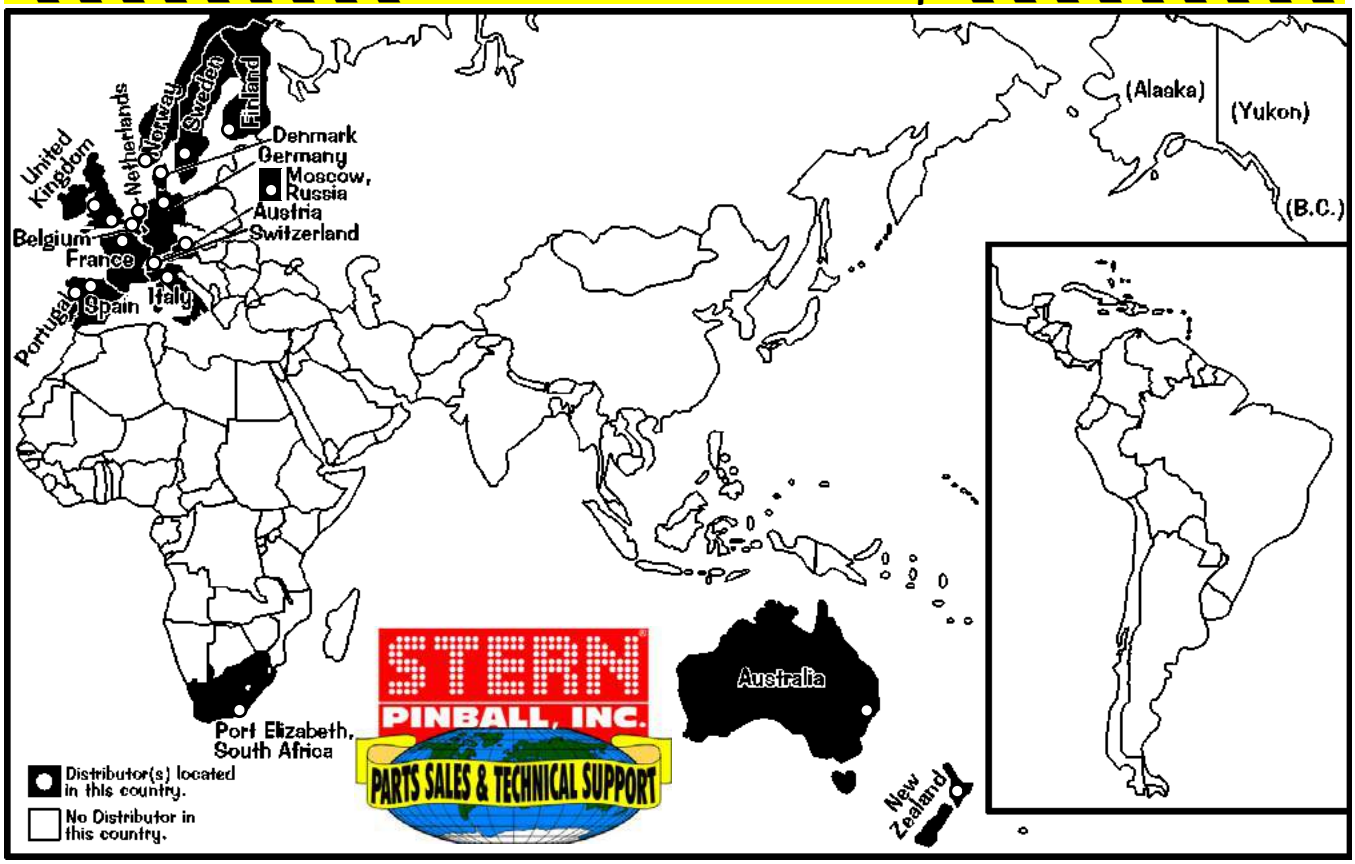

For *Parts & Service*, call your nearest Distributor. View the above maps & the directories on the next page to locate your closest Distributor in your state, province, or country. Distributors and phone numbers are subject to change. Call **Stern® Pinball, Inc.** *(Parts Sales & Technical Support)* with any questions or if your Distributor cannot help you: **1-800-542-5377** (in **USA** or **Canada**) or **1-708-786-5466**. Visit us at www.SternPinball.com for current Distributor Information & other pinball needs.

NASCAR®

Domestic Pinball & Redemption Distributors Directory

ALABAMA
Birmingham Vending
Birmingham (1)
1-205-324-7526

Franco Distributing
Montgomery (2)
1-334-834-3455

ARIZONA
Betson West
Phoenix
1-480-380-8857

Mountain Coin
Phoenix
1-602-269-7596

CALIFORNIA
Betson West
Buena Park (1)
1-714-228-7500
So. San Francisco (2)
1-650-952-4220

C.A. Robinson
Los Angeles (3)
1-323-735-3001
San Francisco (4)
1-650-871-4280

COLORADO
Mountain Coin
Denver
1-303-427-2133

CONNECTICUT
TDM Distributing
Williamantic
1-860-423-1403

FLORIDA
Birmingham Vending
Orlando (1)
1-407-425-1505

Brady Distributing
Miami [Miramar] (2)
1-954-874-1100
Orlando (1)
1-407-872-1666

GEORGIA
Greater Southern Dist.
Smyrna
1-770-803-3040

ILLINOIS
American Vending
Elk Grove Village
1-847-439-9400

Atlas Dist. International
Elk Grove Village
1-847-952-7500

IOWA
Greater America Dist.
Johnston
1-515-278-4455

Moss Distributing
Des Moines
1-515-266-6422

INDIANA
Atlas Dist. International
Indianapolis
1-317-786-6892

Shaffer Distributing
Indianapolis
1-317-899-2530

KANSAS
United Dist., Inc.
Wichita
1-316-263-6181

LOUISIANA
AMA Distributors, Inc.
Metairie (1)
1-504-835-3232

Parts & Service Only:
New Orleans Novelty
New Orleans (2)
1-504-888-3500

MARYLAND
Betson Enterprises
Baltimore
1-410-646-4100

Parts & Service Only:
Weiner Distributing
Baltimore
1-410-525-2600

MASSACHUSETTS
Betson Ent. (NECO)
Norwood (1)
1-781-769-9760

Gekay Sales
E. Longmeadow (2)
1-413-525-2700

MICHIGAN
Atlas Dist. International
Wyoming (1)
1-616-241-1472

Shaffer Distributing
Livonia (2)
1-734-432-1040

MINNESOTA
Lieberman Music
Minneapolis (1)
1-952-887-5299

Moss Distributing
Eagan (2)
1-612-798-8030

MISSOURI
Greater America Dist.
Kansas City (1)
1-816-531-4300

Moss Distributing
Kansas City (1)
1-816-231-6600

Shaffer Distributing
St. Louis (2)
1-314-645-3393

NEBRASKA
Central Dist.
Omaha
1-402-493-5600

Greater America Dist.
Omaha
1-402-553-2812

NEVADA
Mountain Coin
Las Vegas (1)
1-702-798-0900

Reno Game Sales
Reno (2)
1-775-829-2080

NEW JERSEY
Betson Enterprises
Carlstadt (1)
1-201-438-1300

Jack Guarnieri Service Co., Inc. (Pinballsales.com)
Lakewood (2)
1-732-364-9900

NEW MEXICO
Mountain Coin
Albuquerque
1-505-345-7706

NEW YORK
Betson Enterprises
New Hyde Park (2)
1-516-354-4647
Syracuse (3)
1-315-437-2400

Parts & Service Only:
Bay Coin
Richmond Hill (1)
1-718-291-5757

NORTH CAROLINA
Brady Distributing
Charlotte (1)
1-704-357-6284

Parts & Service Only:
Operators Distributing
Archdale (2)
1-336-884-5714

OHIO
Atlas Dist. International
Cincinnati (1)
1-513-851-4100

Cleveland Coin
Cleveland (2)
1-216-692-0960

Shaffer Distributing
Columbus (3)
1-614-421-6800
Valley View (4)
1-216-447-4486

OKLAHOMA
Galaxy Distributing
Tulsa
1-918-835-1166

OREGON
Betson West
Portland
1-503-772-4567

Mountain Coin
Portland
1-503-234-5491

Specialty Coin Products
Portland
1-503-786-9200
Toll-Free
1-800-987-4946

PENNSYLVANIA
Betson Enterprises
King Of Prussia (1)
1-610-265-1155
Pittsburgh (2)
1-412-331-8703

Superior Amusements
Wilkes-Barre (3)
1-570-824-9994

Shaffer Distributing
Pittsburgh (2)
1-412-920-1300

SOUTH CAROLINA
Parts & Service Only:
Green Coin
Mrytle Beach
1-843-626-1900

TENNESSEE
Brady Distributing
Memphis
1-901-345-7811

Parts & Service Only:
Green G.A.M.E.S.
Memphis
1-901-353-1000

TEXAS
Amusement Distributors
San Antonio (3)
1-210-225-3844

Betson Texas
Dallas (1)
1-214-638-4900

Commercial Music
Dallas (1)
1-214-741-6381

Discount Arcade Games
Crowley (1)
1-817-297-0440

H.A. Franz, & Co.
Houston (2)
1-713-523-7366
San Antonio (3)
1-210-226-6322

Master Sales
Corsicana (4)
1-903-874-4740

UTAH
Mountain Coin
Salt Lake City
1-801-262-5494

Struve Distributing
Salt Lake City
1-801-328-1636

WASHINGTON
Mountain Coin
Auburn (Seattle)
1-206-682-5700

WISCONSIN
Pioneer Sales & Svc.
Green Bay (1)
1-920-336-5800
Menomonee Falls (2)
1-262-781-1420

Lieberman/Viking Vend.
Menomonee Falls (2)
1-262-703-4168

CANADA

ONTARIO
Starburst Coin Mach.
Toronto
1-416-251-2122

BRITISH COLUMBIA
Parts & Service Only:
Can. Coin Machine
Burnaby (1)
1-604-420-4008

Parts & Service Only:
Pacific Vending
Vancouver (2)
1-604-324-2164

Note: *For states and Canadian Provinces which do not have Distributors, call the neighboring state or province with the city closest to you (indicated with a white dot). States or Provinces with more than 1 city containing a distributor are numbered. View the map on the previous page.*

Note: *Distributors are subject to change. Visit us at* **www.SternPinball.com** *for current Distributor Information.*

International Distributors Directory

AUSTRALIA
Amusement Mach. Dist.
Matraville
[61] 2931-6-6000

AUSTRIA
Parts & Service Only:
R. Rupp
Leibnitz
[43] 3452-8-6105

BELGIUM
NAMUSCO
Brussels
[32] 2414-4596

DENMARK
JK Automater A/S
Thisted
[45] 9792-0925

ENGLAND
see UNITED KINGDOM

FINLAND
Pelika net Oy
Vantaa
[35] 8 (0) 9-290-450

FRANCE
Avranches Automatic
Ducey
[33] 2338-9-6162

SFA
Paris
[33] 1532-6-8080

GERMANY
ADP Gauselmann
Espelkamp
[49] 5741-27-3384

Bergmann Int'l Gaming
Rellingen
[49] 4101-3-0240
Witten
[49] 2302-28-2540

GERMANY *CONTINUED*
MEXIM
Espelkamp
[49] 5772-4-9422

HOLLAND
see THE NETHERLANDS

ITALY (RSM)
Tecnoplay S.A.
San Marino
[39] 5499-0-1508

JAPAN
HIC, Inc.
Chiba-Ken
[04] 7176-4040

THE NETHERLANDS
JVH Gaming Products
Tilburg
[31] 1359-5-3200

NEW ZEALAND
Coin Cascade Ltd.
Christchuch
[64] 3338-1411

Parts & Service Only:
Amco Machine Supplies
Auckland
[64] 9846-7606

NORWAY
Parts for Pinballs
Sandefjord
[47] 9242-1402

Vendcomatic
Oslo
[47] 2291-8383

PORTUGAL
Jacinto & Martins, S.A.
Belas
[35] 1214-32-5624 *or*
[35] 1214-32-5638

RUSSIA
O.D.A. Game Machines
Moscow
[095] 219-2949 *or*
[095] 219-8917

SOUTH AFRICA
K & W Amusements
Port Elizabeth
[27] 4148-4-3344 *or*
[27] 4148-4-2940

SPAIN
Comercial Cocamatic
Coslada (Madrid)
[34] 9167-1-6980

SWEDEN
Bjuvia Fritid AB
Bjuv
[46] 4238-6900

SWITZERLAND
Novomat, A.G.
Harkingen
[41] 6238-8-8961

UNITED ARAB EMIRATES
Warehouse of Games
Dubai
[97] 1-4881-8431

UNITED KINGDOM
Electrocoin
London, England
[44] 2089-65-2055

Parts & Service Only:
Electrocoin Aftersales
Cardiff, S. Glamorgan
[44] 2920-45-0345

Note: *From inside the US, use prefix 011-.*

POWER REQUIREMENTS

This game ***must be connected to a properly grounded outlet to reduce shock hazard*** & insure proper game operation. *See Sec.* ***5****, Schematics & Troubleshooting, Chp.* ***3****, Cabinet Wiring (Transformer Power Wiring), for transformer connections required for* ***Normal****,* ***High****, and* ***Low Line*** *conditions.*

Normal Line:	110v AC - 125v AC @ 60Hz	
Domestic use an 8AMP 250v Slo-Blo Fuse.	**AVG OPERATION**	**MAX OPERATION**
	CURRENT: **2.8AMP**	CURRENT: **8AMP**
	WATTAGE: **329w**	WATTAGE: **940w**
High Line:	**218v AC - 240v AC @ 50Hz**	
Export use 2x 5AMP 250v Slo-Blo Fuses. (*England & Hong Kong use an 8AMP 250v S/B Fuse.)	**AVG OPERATION**	**MAX OPERATION**
	CURRENT: **1.8AMP**	CURRENT: **5AMP** | **8AMP***
	WATTAGE: **412w**	WATTAGE: **1145w** | **1832w***
		England & Hong Kong use an 8A Fuse.
Low Line:	**95v AC - 108v AC @ 50Hz / 60Hz**	
Export Japan Only use an 8AMP 250v Slo-Blo Fuse.	**AVG OPERATION**	**MAX OPERATION**
	CURRENT: **2.6AMP**	CURRENT: **8AMP**
	WATTAGE: **264w**	WATTAGE: **812w**

TRANSPORTATION

To reduce the possibility of damage, observe **ALL** precautions whenever transporting the game.

Read & follow *Section* ***1****, Chapter* ***1****,* ***Pinball Game Set-Up Procedures****, and* ***How to Secure the Backbox for Transporting****.* Remove the legs and secure the game within the transporting vehicle.

SAVE AND RETAIN ALL PRINTED INFORMATION INSIDE THE CABINET !

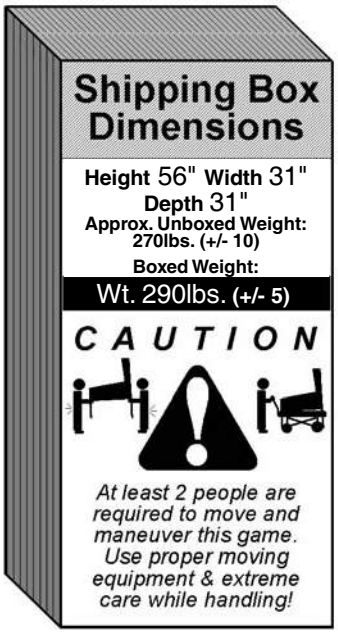

GAME DIMENSIONS

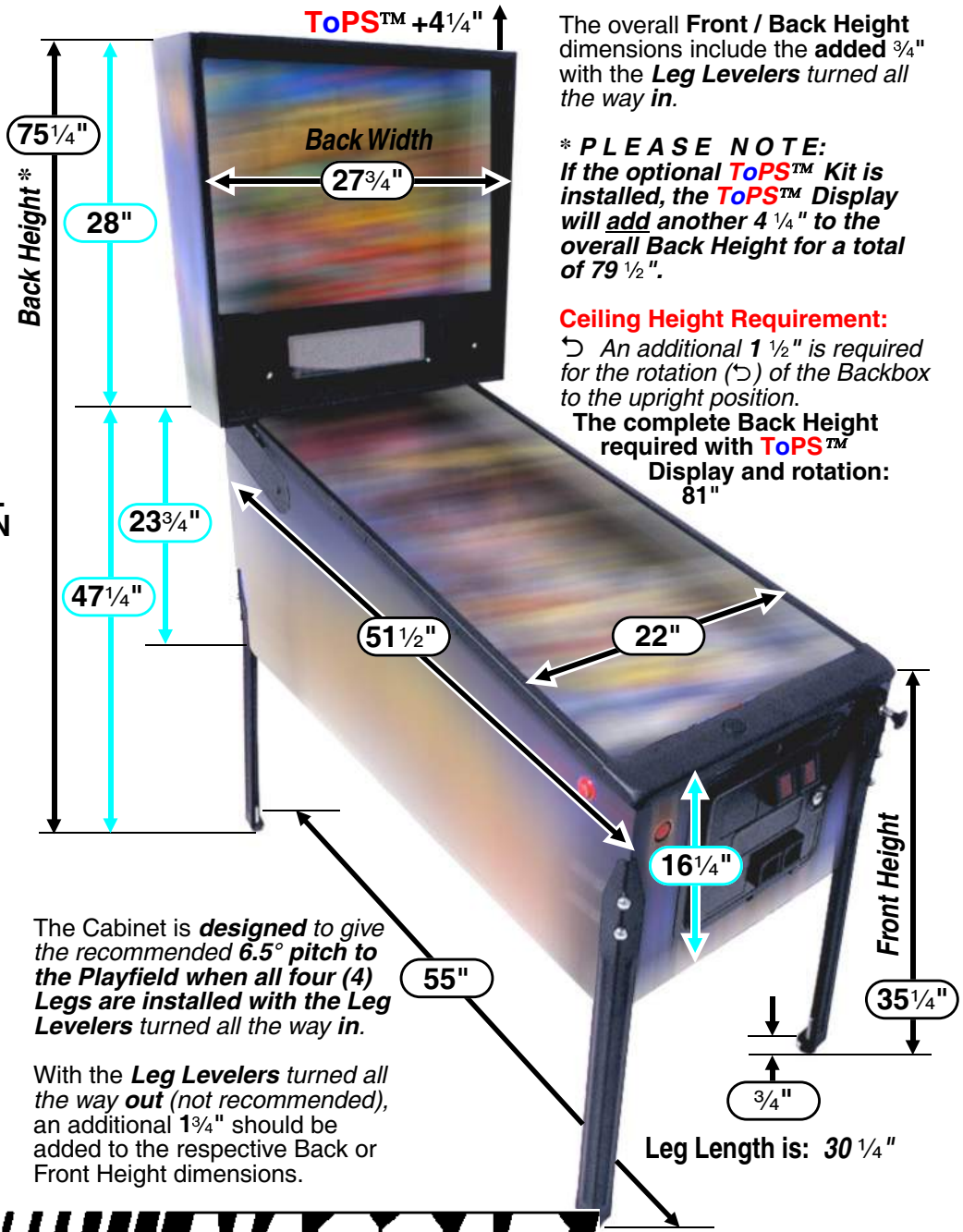

The overall **Front / Back Height** dimensions include the **added** ¾" with the ***Leg Levelers*** *turned all the way* ***in****.*

**** PLEASE NOTE:***
If the optional ToPS™ Kit is installed, the ToPS™ Display will add another 4 ¼" to the overall Back Height for a total of 79 ½".

Ceiling Height Requirement:
↺ *An additional* ***1 ½"*** *is required for the rotation (↺) of the Backbox to the upright position.*
The complete Back Height required with ToPS™ Display and rotation: 81"

The Cabinet is ***designed*** *to give the recommended* ***6.5° pitch to the Playfield when all four (4) Legs are installed with the Leg Levelers*** *turned all the way* ***in****.*

With the ***Leg Levelers*** *turned all the way* ***out*** *(not recommended),* an additional **1¾"** should be added to the respective Back or Front Height dimensions.

Leg Length is: *30 ¼"*

NASCAR®

Find-It-In-Front: Dr. Pinball

STERN PINBALL, INC.

NASCAR® Pinball Game Service Manual General Table of Contents

See Sections 3 & 5, Table Of Contents, for details of that Section and it's Chapters.

For Proper Operation..., four (4) Pinballs must be installed! ..... Inside Front

- ▶ **Backbox PCB Fuses, ROMs, Bridges, Relays Playfield/Cabinet Fuses, Cab. Switches ..... DR. ❶**
- ▶ **Find-It-In-Front: Dr. Pinball Section Explained ▶ How It Works ..... DR. ❷**
- ▶ **Diagnostic Aids ▶ CPU DIP Switch Setting ..... DR. ❸**
- ▶ **Switch Matrix Grid, Dedicated Switches & Locations ..... DR. ❹**
- ▶ **Lamp Matrix Grid & Locations ..... DR. ❺**
- ▶ **Coils Detailed Chart Table ..... DR. ❻**
- ▶ **Coil & Flash Lamp Locations ..... DR. ❼**
- ▶ **Domestic Pinball & Redemption and International Distributors Maps ..... DR. ❽**
- ▶ **Domestic Pinball & Redemption and International Distributors Directories ..... DR. ❾**
- ▶ **Power Requirements ▶ Transportation ▶ Game Dimensions ..... DR. ❿**

Game Manual General Table of Contents ..... i-ii

OPERATOR ALERT: NASCAR® Pinball Game Functionality Test ..... iii-iv

SECTION 1 1-4

Chapter 1, After Set-Up 1

- ▷ Pinball Game Set-Up Procedures 1
- ▷ Pinball Game Set-Up Future Reference 2-3
- ▷ How to Secure the Backbox... ▷ Leg Leveler Adjustment ▷ Easy Access... - 2 Positions 4

SECTION 2 5-6

Chapter 1, Game Operation & Features 5

- ▷ Start of Game Features: Starting a Normal Game, ... Team Play, ... Tournament Play with ToPS™
- ▷ During Game Features: Feature Mode & Combination Shots, Multiball & Replay Feature
- ▷ End of Game Features: Game Endings, Match Features, Entering Initials/Name 5
- ▷ Auto Percentaging ▷ Instruction Card 6

SECTION 3 7-57

- ▷ Portals™ Service Menu System **Table of Contents** *(detailed outline of this section)* 7
- ▷ Portals™ Service Switch Set Access & Use *(Function 1, ...; Function 2, ...; Function 3, ...)* 8

Chapter 1, Portals™ Service Menu Introduction 9

- ▷ How to Use This Section 9
- ▷ Portals™ Service Menu Icon Tree 10-11
- ▷ Portals™ Service Menu Example ▶ Exiting the Portals™ Service Menu 12-14

Chapter 2, Go To Diagnostics Menu 15-31
Chapter 3, Go To Audits Menu 32-37
Chapter 4, Go To Adjustments Menu 38-46
Chapter 5, Go To Installs Menu 47-50
Chapter 6, Go To Reset Menu 51-52
Chapter 7, Go To Tournament Menu 53-57

SECTION 4 58-104

Chapter 1, Parts Identification & Location (The Pink Pages) 58-81

- ▷ **Table of Contents** & Overview 59

NASCAR® Pinball Backbox Assembly, **500-600**2-86-86 60
NASCAR® Pinball Speaker Panel Assy. for the Backbox, **515-6888-03-86** *and Associated Parts:* 61
Cabinet - Parts ■ & Switches □ 62-63
Playfield Top - Miscellaneous Parts □ and Brackets ■ 64
Playfield Bottom - Miscellaneous Parts ■ and Brackets ■ 65
Playfield Top & Bottom - Switches (Above) □ and Switches (Below) ■ 66
Playfield Top - Roll-Under Gates □ and Spinners ■ 67

Section 4, Chapter 1, Parts Identification & Location (The Pink Pages) Continued on the Next Page

Playfield Top - Flat Rails □, Wood Rails ■, Ball Guides ■ & Wire Forms ■ 68
Playfield Top - Plastics (Screened & Clear) Kit, Decals & Mylar Kits....69
Playfield Top & Bottom - Metal Posts □ & Fin Shank Screws ■ (Actual Size)....70-71
Playfield Top & Bottom - Nylon Stop, KEPS, Hex, T-, Flange, Pal & Wing Nuts (Actual Size) 71
Playfield Top - Hex Spacers □ (Actual Size)....72-73
Playfield Top - Plastic Posts & Spacers □ & Metal Spacers ■ (Actual Size) 74-75
Playfield Top & Bottom - Rubber Parts Red ■, Black ■ & White □ (Rings Actual Size) 76-77
Playfield Top & Bottom - Small Bayonet Sockets & Bulbs (Actual Size)....78-79
Playfield Bottom - Large Bayonet Sockets & Bulbs (Actual Size)....79
Playfield Top & Bottom - Wedge Base Sockets & Bulbs (Actual Size)....80
Chapter 2, Drawings for Major Assemblies & Ramps (The Blue Pages) 81-104
▷ **Table of Contents** & Overview 81
Ball Shooter (Plunger) Assembly, **500-6146-00-04N**....(Top) 82
Autoplunger Arm Weld Assembly, **500-6091-00**, Autoplunger Coil Assembly, **500-6092-02B** and Shooter Lane Switch Assembly, **500-6930-00**.... (Bot) 82
4-Ball Trough Assembly, **500-6318-24-86**....83
Trough Popper Assembly, **500-6850-00**....(Top) 84
Plastic Under-Trough (below) ***Individual Parts Only***.... (Bot) 84
Eject VUK (Vertical Up-Kicker) Assembly, **500-6846-00**....(Top) 85
Ball Deflector (Top Orbit) Assembly, **500-6841-00**.... (Bot) 85
Flipper (Left) Assembly, **500-6543-14** and Associated Parts:....86
Flipper (Right) Assembly, **500-6543-04** and Associated Parts: 87
Slingshot (Left & Right) Assemblies, **500-5849-00** (Qty. 2) 88
Bumper Top, Bumper Bottom & Bumper Switch ***Individual Parts Only***....89
Hot Dog Sign (Above Playfield) ***Individual Parts Only*** ....(Top) 90
Hot Dog Drive Assembly (Below Playfield), **500-6845-00** .... (Bot) 90
2-Post Ball Diverter Assembly, **500-6837-00** and Associated Switch Parts: 91
Diverter (Left) Assembly ***Individual Parts Only***....92
Diverter (Right) Assembly ***Individual Parts Only***....93
▶ **Diverters (Left & Right) and Blades Disassembly For Repair (Procedure) 92-93A**
▶ **1- & 2-Coil (Ball Accelerators) Magnets Disassembly for Repair (Procedure)....94-95A**
1-Coil (Ball Accelerator) Magnet ***Individual Parts Only***....94
2-Coil (Ball Accelerator) Magnet ***Individual Parts Only***....95
3-Bank Drop Target Assembly, **500-6794-01-86**....96-97
Car Target Up-Down Scoop (VUK) ***Individual Parts Only*** 98-99
▶ **Car Target (Garage) Up-Down Scoop Disassembly For Repair (Procedure)....98-99A—98-99B**
Right Plastic Ramp, Truck (Ramp) Kicker, Diverter and Wire Ramps ***Individual Parts Only***....100-101
▶ **Left & Right Ramp Removal as a single unit (Procedure) ....100-102A—100-102B**
Left Plastic Ramp ***Individual Parts Only***....102
Back Panel and Motor (Rotating Car Target) ***Individual Parts Only*** 103
▶ **Rotating Wheel Target & Back Panel Disassembly For Repair (Procedure) 103A-103B**
▷ **UK ONLY OPTIONAL: Ball Deflector Asssemblies, 500-5788-02 (Qty. 2)....(Top) 104**
▷ **UK ONLY OPTIONAL: Up/Down Post Assembly, 500-6293-00 .... (Bot) 104**

SECTION 5 105-160
▷ Schematics, Wiring, PCBs & Troubleshooting **Table of Contents** *(detailed outline of this section)*....105
▷ Coils Detailed Chart Table 106
Chapter 1, Backbox Wiring (The Yellow Pages)....105-108
Chapter 2, Playfield Wiring (The Yellow Pages) 109-112
Chapter 3, Cabinet Wiring (The Yellow Pages)....113-114
Chapter 4, Printed Circuit Boards (PCBs) (The Yellow Pages)....115-160

APPENDIXES A-J A1-J1
▷ Appendixes **Table of Contents** *(detailed outline of this section)* ....after 160
Appendixes A-J....A1-J1
Plastic Part Color Chart.... (Bottom) H1 + (Top) I1
Glossary of Terms....Last Page
Limited Warranty, Cautions, Warnings & Notices ....Last Page
▶ **Switch Matrix Grid & Dedicated Switches ▶ Lamp Matrix Grid ....Inside Back**

OPERATOR ALERT STOP

KEEP THIS IN THE GAME CABINET FOR FUTURE REFERENCE

NASCAR PINBALL GAME FUCTIONALITY TEST

This document outlines a quick functional test of the major components of NASCAR® Pinball to be followed by a trained or qualified technician. If these steps are followed in order, it can be assumed the game can be placed into operation. Any failure should be fixed before moving to the next step of the test. ***ENTER PORTALS (DIAGNOSTICS) IF REQUIRED. READ YOUR SERVICE GAME MANUAL (SECTION 3) FOR MORE INFO!***

1. Set the game up so the bubble level is centered **6.5°** (degrees). The race track feature assumes a game pitch of **6.5°**. Pitching the game **MORE** steeply than this may cause problems with the race tracks ability to propel the balls all the way around the circumference of the game. Pitching the game **LESS** than this could adversly effect the games earnings.
2. Make sure 4 Pinballs are installed in the game (find them in the cash box).
3. If you haven't already done so, remove the playfield glass.
4. Turn on (power-up) the game. **CAUTION: WITH THE GLASS OFF NEVER TOUCH ELECTRONICS DIRECTLY. SHOCK COULD OCCUR.**
5. Check the coin mechs by placing coins into the game. Do credits register? Adjust the coin mechs, if necessary.
6. Is the Start Button *flashing* with credits on the game? *If not, check if a bad Start Button bulb?*
7. Make sure the Coin Door is closed (Game energized).
8. Press the flashing Start Button on the front of the cabinet. 1 pinball should appear on the Shooter Lane (left side front).
9. Use the Ball Shooter (Plunger) to launch the ball. The ball should go around the race track (all around the game) 2 times. This should show if the race track is functional. If the ball does not accelerate after going thru the race track magnets investigate the problem (fuse, wiring, switches).
10. After going all the way around the race track, the ball should enter the main playfield by means of the Right Diverter Gate (curved blade). *Did the diverter opened OK? If not, check the Right Diverter Assembly.* ***NOTE THE ADJUSTMENT PROCEDURE ON THE ASSEMBLY BELOW THE PLAYFIELD.***
11. Catch the ball and hold onto it. Use your fingers to knock down all 3 Drop Targets *(right side of playfield). Do they go down and then reset? If not, check the 3-Bank Drop Target Assembly.*
12. Drop a ball into the Pit Lane area on the left side of the game (3-Ball lock area). *Does the 2-Post (Pin) Ball Diverter pull the right post (pin) down and let the ball back to the main playfield area? The left post (pin) will be check in Step 24.*
13. Roll a ball up and around the Right Ramp. *Does the switch activate?* (You should see a display on the dot matrix giving you "Ramp Miles".)
14. *Is the Rotating Car spinning inside the Nascar Hauler on the Left Ramp?* The car should be spinning after all of the previous tests. Check for binding or an unplugged motor.
15. Roll ball up the Left Ramp and try to **NOT HIT THE SPINNING CAR**. You should once again see "ramp miles" the ball should be kicked out, to the Right Ramp. *If no kick, does the kicker switch need to be adjusted? When the ball is kicked, does the Ramp Diverter close and send the ball to the Left Flipper? If not, check the diverter wiring.*
16. Roll the ball up the Left Ramp again, this time **HIT THE SPINNING CAR**. The game should award a "move up 1 position in the race". The ball should then roll back against the wire gate and fall left onto pit lane. *If no award is given, are the 2 OPTO's on the hauler reading correctly? Are the connectors swapped in their plug in position on the OPTO board behind the hauler? If this is a problem, go to switch test and check out those 2 OPTO's. Follow decals on wires under the playfield & back panel or refer to the yellow pages 148-151 in your Service Game Manual.*

Page continues on reverse >

Instruction Sheet SPI Part Number: 756-5038-86

17. Check each of the POP Bumpers manually to be sure they fire when their switch is made. *Any adjustments needed? Caution! Use a pinball, the ring will pull down quickly. Watch your fingers.*
18. Take a ball and hit the Captive Ball on the right side of the game. The trapped ball should then hit its Stand-Up Target and cause an effect. *Does the Stand-Up Target need to be adjusted?*
19. Hit the Test Car with the ball. The car should raise itself above the playfield. If hitting the car produces no result, the car hit switch should be checked.
20. With the car in the air (up position), place a ball in the Garage Popper (Up-Down Scoop / VUK). The ball should be shot back out onto the playfield. If the ball does not register, check the popper switch in the garage.
21. Any problem with the test car/up down switch will show up as a series of sound calls but no motion of the mechanism. Check the up down switch.
22. Manually press the playfield orbit switches, and drain switches. *Does a sound occur? If not, check their adjustment.*
23. Take the ball and drop it into the center drain area. You should hear the ball being popped up into the ball trough and the game should go to ball end (Bonus count). *If you do not hear the popped ball being handled, check the lower drain popper switch adjustment.*
24. ***ONE LAST TEST.*** *This one insures that main multiball will operate correctly.* Put a ball into play and then catch it. Manually roll the ball thru the lanes that are lit and say "COLLECT RACE". This lights the RACE letters in the center of the playfield. Manually knock down the Drop Targets to continue to light the "COLLECT RACE" shots. Then roll the ball thru the shots. Once all 4 RACE letters are lit, the Left Ramp will light for ball lock. Roll 2 balls up the ramp. They should be blocked by the rotating car assembly which will park itself to block the path of the balls. The 2 locked balls should fall onto pit lane and stay there. The rotating car mech should then move out of the way of blocking the Left Ramp shot. Finally a third ball should be rolled up the Left Ramp and go all the way into the rear kicker. T*hat should start main Multiball feature mode.* After a big show, one ball from pit lane will begin orbiting on the race track with the other 2 on the main playfield. This is how to test the Left Post (Pin) on the 2-Post Diverter mechanism on pit road. If any of this fails, check the rotating car position OPTO's or the pit lane switches for adjustment.

That's it!

If all of the above works, the game is functionally sound and can be put into play.
If any adjustments need to be made on the major mechanisms, open your Service Game Manual.
Section 3, Chapter 2 covers Diagnostics (Portals™ Service Menu).
Use this section to test Switches, Lamps & Coils.

For mechanical adjustments and/or disassembly procedures, open to Section 4, Chapter 2 (Blue Pages).
Repair Procedures are provided for this game unique assemblies. Any questions, comments or help,

PLEASE CALL OUR TECHNICAL SUPPORT STAFF at
1-800-542-5377 or 1-708-345-7700 (choose option 1).

*One important last note: please heed the decal on the Garage (Car Up-Down) Mech under the playfield. If ever making adjustments or changing parts, make sure the Tape is in place and is not worn and magnalube is applied to the Pem Studs where the bearings are located (**A**) under the Retaining Plate (**B**). Details on this assembly start on Page 98 of your Game Manual.*

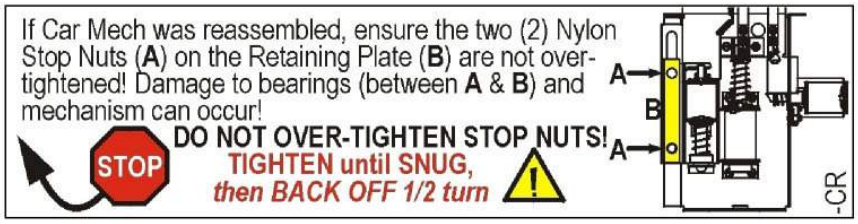

Instruction Sheet SPI Part Number: 756-5038-86

After Set-Up

Pinball Game Set-Up Procedures

...after reading the Pinball Game Set-Up Instruction Sheet (SPI Part Nº 755-5310-00) included with your New Pinball Game, continue with the below procedures:

With the Back Glass Removed:

1. Check all connectors in the Backbox for loose wire terminations. Reseat any loose wire by pushing in on the terminal. **Push on all** connectors plugged into the CPU/Sound Board, I/O Power Driver Board, and the Display Power Bd. to check that they are properly seated. Ensure Fluorescent Light Tube is seated correctly. Check that all fuses are seated properly. *Close and lock the Backbox and secure its' keys back inside the Coin Door.*

With the Playfield Glass Removed:

2. Remove all shipping tie downs, shipping blocks, packing foam, etc., if present.

READ ALL PRINTED INFORMATION! Shipping Instructions and/or Decals describe warnings, cautions, and/or important information specific to the game. **SAVE ALL IN CABINET!**

If pinballs were already installed into the Ball Trough *(under the arch)*, remove them before performing the following step. ******Pinballs can fall out and away from the playfield******

3. Raise the playfield and rest it against the Backbox. See the illustration **"Easy Access Service System - 2 Positions"** *on Page 4.*

4. Visually inspect all cabinet cables and connector terminations; ensure no wires or cables are pinched and that cable harnesses are not pulled tight.

5. Make sure the proper amount of pinballs are installed *(Amount of balls are always specified on decal attached to the lock down assembly and at the top of the inside cover).*

6. Lower the playfield and ensure game is **level side-to-side** by adjusting Leg Levelers, if required. See the illustration **"Leg Leveler Adjustment"** *on Page 4.* Start with the Leg Levelers turned all the way in *(1.25" from floor to bottom of leg),* depending on the condition of the floor, adjust the Leg Levelers as required until the **game pitch is 6.5**°, determined by the Bubble Level.

USE THE BUBBLE LEVEL ON THE WOOD RAIL (LOWER RIGHT) TO DETERMINE IF LEVEL IS ACHIEVED. BUBBLE SHOULD APPEAR BETWEEN THE 2 BLACK LINES. SEE PAGE 4 FOR AN ILLUSTRATION.

The playfield incline affects difficulty of play. Use the recommended incline; Game difficulty is best varied using game adjustments.

With the Coin Door Open:

7. If desired, perform any self tests at this time *(see Section **3**, Chapter **1**, **Portals™ Service Menu Introduction**, and Chapter **2**, **GO TO DIAGNOSTICS MENU**, for instructions on how to enter "**Begin Play Test**" and "**Game Name Test**" Menus to test components on the game).*

8. If desired, adjust **Game Pricing, Standard and/or Custom** *(see Section **3**, Chapter **4**, **GO TO ADJUSTMENTS MENU** and Section **3**, Chapter **5**, **GO TO INSTALLS MENU** to adjust **Game Difficulty**, **3-** or **5-Ball Play**, **Home** or **Tournament Settings**, **Novelty**, **Add-A-Ball**, etc.).*

Per CE: "The appliance has to be placed in a horizontal position." "This appliance is not to be cleaned by a Water Jet."

Pinball Game Set-Up Future Reference

Open up the Printable Version in both 8-1/2 X 11 & 11 X 17.

CAUTION: At least 2 people are required to move and maneuver game.
Use proper moving equipment & extreme care while handling. Pinball game is 260lbs (+/- 10).
Refer to Game Manual for further Game Set-Up Procedures (Sec. 1, Chp. 1) and other important information!
TOOLS REQUIRED: 5/8" Socket Wrench & Utility Knife

1. Before unpacking box, lay the box flat on its side with **"TRUCK THIS SIDE ONLY"** facing the floor.

2. Slide game out using the **Black Nylon Strapping** as a handle.

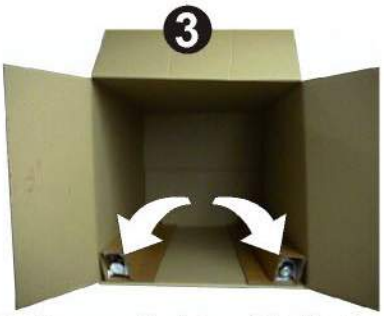

3. Remove the **Four (4) Identical Legs with Levelers** from the carton and set aside. (***SAVE!*** *all packing materials and information sheets related to this pinball until Set-Up is complete.)*

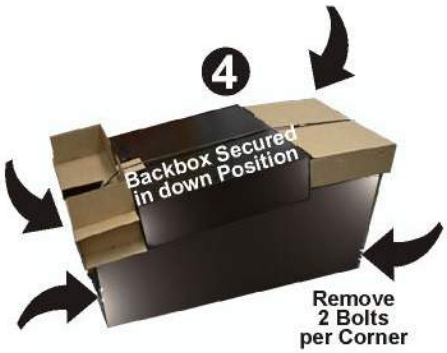

4. At this point **DO NOT CUT STRAPPING** *(You want to keep the Backbox secured in the down position)*. Loosen and remove the 8 Leg Bolts (use 5/8" Socket Wrench) and set aside.

5. Lift game into an **UPRIGHT POSITION** *(Coin Door Facing Up).*

6. Install **FRONT LEGS** using the bolts removed from ***Step 4***. *Secure tightly.* ***Take care not to scratch the Black Finish on any of the Legs.***

7. Carefully set the game down on the **FRONT LEGS**. *Care should be taken...Game is heavy, two (2) people are recommended for this and the following step.*

8. Using supports or two (2) people, prop the rear of the cabinet up and install **REAR LEGS**. *Secure tightly.*

9. Cut **BLACK NYLON STRAPPING**. ***CAUTION:*** *Strapping will* ***SNAP, protect your eyes! Use extreme care*** *when using a utility knife or scissors.*

10

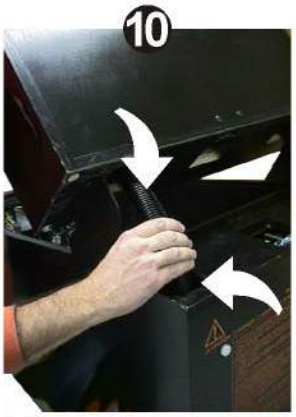

10. Lift the Backbox into the **UPRIGHT POSITION** *(Ensure the cables do not get pinched).*

11

11. After the **BACKBOX** is in the **UPRIGHT POSITION**, locate the **5/16" HEX KEY**. While inserted, rotate **KEY** with a **3/4** turn until latched & locked.

12

12. The next step you will remove the **PLAYFIELD GLASS** & **BACK GLASS** to access the inside of the cabinet & Backbox.

NOTE: KEYS are tied to the **Shooter Rod*** *(if equipped)* or taped to the **Playfield Glass** *(if equipped with Auto Plunger Button). Remove keys. One (1) set of keys opens the Coin Door, the other set is used to unlock the* ***Back Glass*** *to gain access to the White Star Board System.*

13

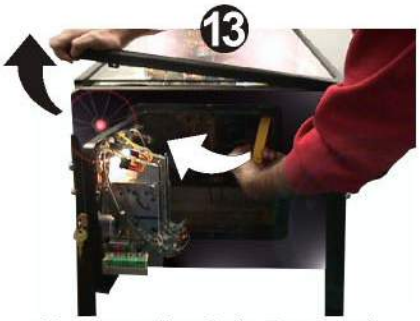

13. Open the Coin Door and pull the **YELLOW HANDLE** to the **LEFT** and at the same time pull up on the **FRONT TOP MOLDING** and remove. The **GLASS** can now be pulled out towards you and removed. ***TAKE CARE*** *while moving; set glass on a safe surface.*

14

14. Through the open **Coin Door**, remove the **RETAINING RING** at the rear of the **CASH BOX** and open. Remove the **PINBALLS** & the **PLUMB BOB** *from the* **SPARE PARTS BAG.** *(Save the other spare parts in cabinet).* Install the **PINBALLS** by placing them on the playfield so they can roll into the Outhole **Ball Trough**.

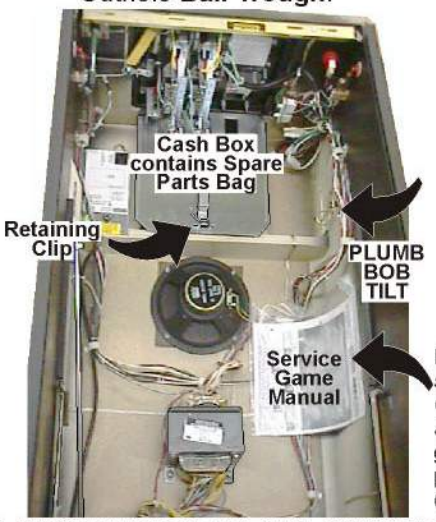

15

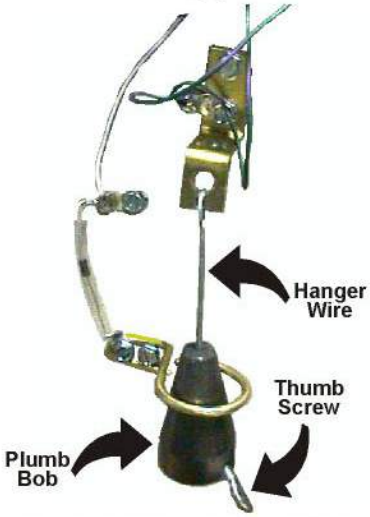

15. Install the **PLUMB BOB** on the **Hanger Wire** & tighten the **Thumb Screw**. Loosening the **Thumb Screw** & lowering or raising the **PLUMB BOB** makes the ***Games Tilt Function*** more or less sensitive.

Remove the **PINBALL GAME MANUAL** *(stapled to side of the left wall of the cabinet). Review Section 1, Chapter 1, which describes how to lift the playfield to access the Plumb Bob Tilt Assembly.* The manual gives you all the important information you need to prepare for final set-up and other important information (such as Parts, Diagnostics, Schematics and more...).

ALWAYS STORE THE MANUAL & INFORMATION SHEETS INSIDE THE CABINET WHEN NOT USING.

How to Secure the Backbox for Transporting

*For more Backbox details & part numbers, see Section **4**, Chapter **1**, **Backbox Assembly**, Pages 60-61.*

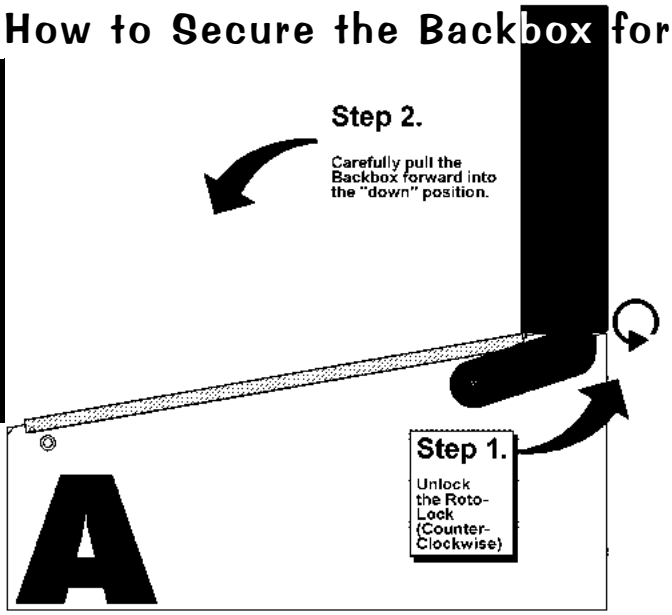

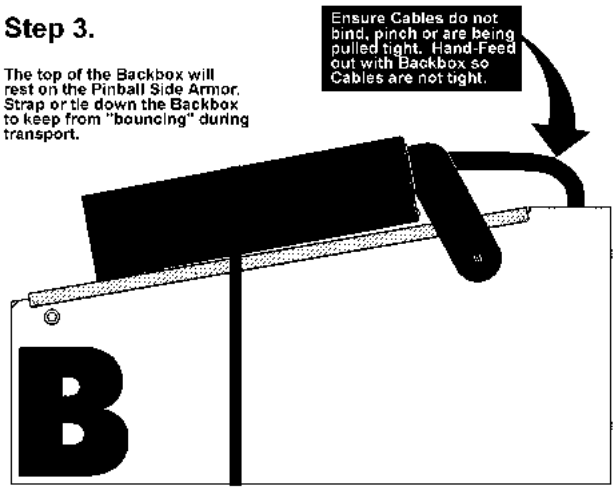

Leg Leveler Adjustment

Attach the four (4) Leg Assemblies to cabinet corners with the eight (8) leg bolts provided .

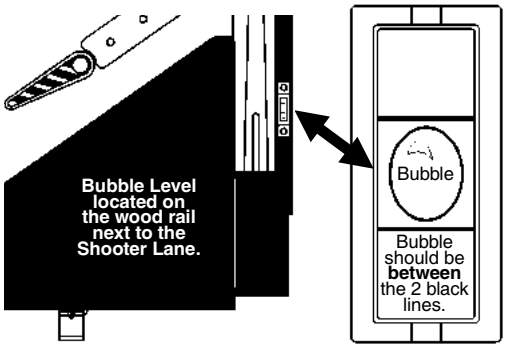

Start adjustment with the leg levelers *turned all the way in.*

View the *bubble* in the level provided on the right side wood rail.

Adjust the front or rear levelers as necessary to cause the bubble to float between the two (2) black lines.

Use a pinball to roll down the center of the playfield for side-to-side leveling.

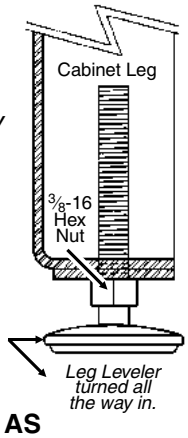

YOUR PLAYFIELD PITCH IS NOW AT 6.5° AS REQUIRED FOR PROPER GAME PLAY!

Note: *For custom adjustment greater than >6.5° can be achieved by turning out the rear leg leveler(s), however,* ***it is not recommended.***

Easy Access Service System - 2 Positions

With the front molding & glass removed, carefully lift the playfield *(take care when using the Bottom Arch to hoist).*

Position 1
When lifted high enough, the ***Playfield Support Slide Brackets*** (**Fig. 1A**) can be seen and can clear the cabinet front (**Fig. 1B**). At this time, pull the playfield toward the front of the cabinet, checking that the mechanical components clear the cabinet front, then rest the playfield on the ***Playfield Support Slide Brackets*** at the front channel of cabinet (**Fig. 1C**);

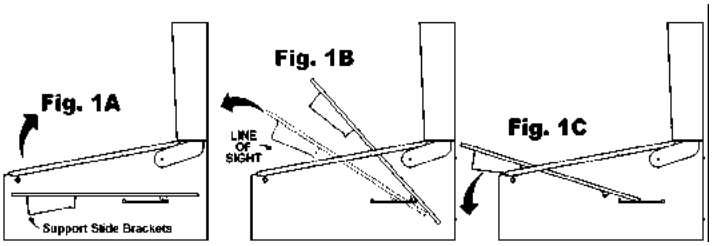

Position 2
With the playfield at rest, hold the sides & pull toward the front of the cabinet *(approx. 6" to 8")*, until resistance is felt from ***Edge Slide Brackets*** stopping against the ***Slide & Pivot Support Brackets*** located on either side of the cabinet (**Fig. 2A**). At this time, swivel the playfield toward the Backbox, then rest on the top edge (**Fig. 2B & 2C**).

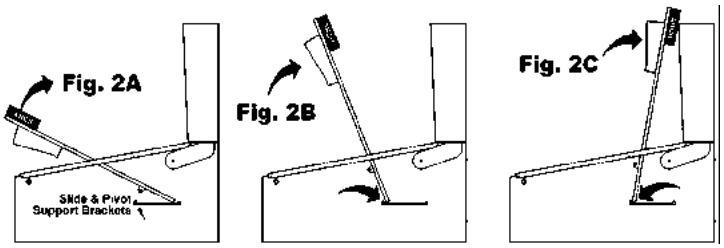

Game Operation & Features

Start of Game Features

Starting a Normal Game

Insert coin(s). The game generates a sound for the first coin & for each subsequent coin with the display indicating the number of credits posted. Press the **Start Button** and a start-up sound is produced, and the posted credits are reduced by one. Subsequent players can be added (**up to 4 can play!**) by pressing the **Start Button** before the end of ball 1 *(with sufficient credit in the game).*

The display now indicates the player or # of players selected from the total depressions of the **Start Button**. The display indicates the ball in play, and a ball is served to the *Shooter Lane*. An introduction is shown followed by Skill Shot Graphics and/or instructions. Pressing the **Start Button** after ball 1 of any player will start a new game *(if credits are available), **but only*** if the **Start Button** is depressed for 2-3 seconds. This delay is to avoid accidental "re-starts" of a game. ***Note:*** *Any partial credit remaining during game play after the end of ball 1, or power down, will be eliminated.*

Starting Team Play (Doubles!)

This option is adjustable with **Standard Adj. 50, Team Scores** (Default = **NO**). If **Standard Adj. 50, Team Scores** is changed to **YES**, then Team Play will be made available. ***Team Play only works in a 4-Player Game.*** The totals for Players 1/ 3 (Team 1) & Players 2 / 4 (Team 2) are then displayed individually ***as well as*** the combined score for **BOTH TEAMS**.

Starting Tournament Play with ToPS

This Pinball Game is **ToPS™ (Tournament Pinball System) Ready**. ***Optional Tournament equipment & hardware (sold separately) is required.*** *Review Section **3**, Chp. **7**, **GO TO TOURNAMENT MENU**, for more info!*

Unlike a *"Normal Game"*, the Tournament Game is started by depressing the **Tournament Start Button** *(located on the Front Molding, if installed).* If adequate credit(s) are posted **and** a ***Tournament is started*** via **Portals™** *(select the "TOUR" Icon in the Main Menu)*, the **Tournament Start Button** will flash. *Any adjustments or installs changed will not be in affect. Starting a Tournament Game defaults to preprogrammed Tournament Rules (e.g. No Extra Balls, Specials or Bonus Credits are awarded); however, starting a Normal Game after a Tournament Game will then revert back to any unique adjustments or installs performed previously.* **During** and **End of Game Features** operate in the same manner *(differences in adjustment defaults are present).*

During Game Features

Feature Mode & Combination Shots

Features are lit on the playfield and started by completing *certain shots (e.g. completion of Target Banks, Orbit(s), Ramp(s) and/or any combination of the shots).*

Multiball

Multiball is started after completion of certain features *(amount of balls used depends on game rules).*

Replay Feature

Replay awards are given as the player exceeds a High Score Level during game play. This can be adjusted with **Standard Adj. 3, Replay Award** (Default = **CREDIT**). Players exceeding the High Score Levels can receive: **CREDIT**, **EXTRA BALL**, or **SPECIAL**. Adjust to **NONE** if a replay award is not desired.

End of Game Features

Game Endings

When all player(s) have played all balls (including any Extra Balls), the game ends. If power is interrupted during the course of a game, it will end that game (***see Starting a Normal Game***). Closure of the Plumb Bob Tilt Switch according to the number of tilts set, **Standard Adj. 15, Tilt Warnings** (Default = **01**) or prolonged closure, will end the current Ball-In-Play. Closure of the Slam Tilt Switch on the Coin Door ends the current game(s).

Match Feature

At the end of each ball, earned bonuses are collected. At the end of the last ball of a game (including any extra balls, if applicable), earned bonuses are collected, then the system produces a random 2-digit number (a multiple of 10; 00 to 90). Matching the last 2 digits of the player's score with this number awards a credit. In **Std. Adj. 13, Match Percentage** (Default = **8%**) can be changed from 0-10%. Changing the percentage to **0% displays** the *"Match Animation"* at the end of the game, however, will never match nor award anything. Changing this adjustment to **OFF** will **not display** the *"Match Animation"* nor award anything.

Entering Initials/Name

If player achieved a new *High Score* in a game or achieved a *Special Feature (if given)* the player may enter 3 Initials. In **Std. Adj. 29, High Score Initials** (Default = **3 Initials**) can also be changed to **10-Letter Name**. Use the **Flipper Buttons** to choose a letter or character as seen on the Dot Display. Hitting the **Start Button** locks in the letter or character and proceeds to the next letter. The game then proceeds into the ***Game-Over Mode*** and then to the ***Attract Mode***.

Note: **Standard Adj. 31**, ***Custom Message*** *(Default = **ON**) can be displayed during the Attract Mode; enter letters in the same fashion.*

*For more details on Adjustments, see Sec. **3**, Chp. **4**.*

Continued Next Page.

Auto Percentaging

This game is equipped with Auto Percentaging, **Standard Adj. 01, Replay Type** (Default = **AUTO**, *adjustable*). The *Replay Percent* is automatically adjusted, **Standard Adj. 02, Replay Percentage**, or you can set a *Fixed Replay Score*. Four levels may be selected. Adjustments allow awarding of a "CREDIT" (or your setting) as each level is exceeded. This can be adjusted with, **Standard Adj. 03, Replay Award** (Default = **CREDIT**). With the ***Autopercentage Feature***, if the actual replay percentage is higher or lower than that desired, the game will automatically adjust for the new recommended percentage score(s). You may choose to make a different "score-to-beat" adjustment; this is done by utilizing **Standard Adj. 04, Replay Levels**. *For more details with **Adjustments**, see Section **3**, Chapter **4**, **GO TO ADJUSTMENTS MENU**; also, see see Section **3**, Chapter **5**, **GO TO INSTALLS MENU** for further customization of your Pinball Game.*

Instruction Card

Below is a **COPY** of the Game Instruction Card (SPI Nr.: **755-5186-00-Y USA**). *For a replacement Game Instruction Card on Astrobright Solar Yellow Card Stock, add **-Y** to the end of the Part Number above.* If your card is lost or damaged, simply **COPY** this page and *cut out* the card as a *temporary replacement* until a *new card is ordered.*

(***Hint:*** **COPY & CUT** along the dotted line and fold in the center to keep the "COPY" sturdy.)

COPY & CUT

NASCAR®

For more detailed game rules, visit our website @ www.SternPinball.com and click on the "NASCAR®" or "Game Archive" Pop Bumper Link.

FOLD HERE

NASCAR®

GARAGE AWARDS: Hit the **TEST CAR** to open the **GARAGE.** Enter the garage and follow the instructions on the Dot Display for that mode.

EXTRA BALL: The two ramps award **HAULER MILES**. Collect **HAULER MILES** to light the *extra ball shot*. Extra Ball is also available from the **GARAGE AWARDS** and **SCANNER AWARDS**.

MULTIBALL: Complete the **DROP TARGETS** to light the **R-A-C-E** *shots*. Shoot the lit **R-A-C-E** *shots* to spell **RACE**. When all 4 letters in **RACE** are lit, **LOCK** will light. Lock 2 balls to light Multiball. Begin Multiball by shooting up the **LEFT RAMP**.

MULTIBALL JACKPOTS: While in Multiball, shoot the lit **Jackpot** *shots*. Shoot the lit **BONUS JACKPOT** to put balls back on the track. *Note that any time a ball is on the race track, you should hit the **CAPTIVE BALL** to freeze a new Jackpot Value!*

CHAMP #1: **C-H-A-M-P-#1 LETTERS** are awarded from **SPEED SHOTS**, **HARD RACING**, **ROAD COURSE**, **VICTORY LAP** and are possible from **MODE BONUS**. Complete **C-H-A-M-P-#1** to start **CHAMPION CHALLENGE**.

HINT: *Check Instant Info for CHAMP #1 list!*

NASCAR® is a registered trademark of the National Association for Stock Car Auto Racing, Inc. ©2005 All Rights Reserved. Printed in the USA. 755-5186-00-Y USA

Click on card to open the Instruction Card for printing.

Service Menu System

Table of Contents

Chapter 1, Portals™ Service Menu Introduction 9

Service Switch Set (Red, Green & Black Buttons) Access & Use 8
- Function 1, Volume Menu / Function 2, Service Credits Menu / Function 3, Portals™ Service Menu 8

How to Use This Section 9

Portals™ Service Menu Icon Tree for NASCAR® Pinball 10-11
- Example 12-13

QUIT THIS SESSION (Exiting the Portals™ Service Menu) & Problem / Solution Table 14

Chapter 2, Go To Diagnostics Menu (Overview) 15

GO TO DIAGNOSTICS MENU 15

■ Go To Switch Menu ■■ Switch Test ■■ Active Switch Test ■■ Dedicated Switch Test 16
- Switch Matrix Grid & Dedicated Switches
- Switch Matrix Grid Locations, Typical Switch Wiring & Schematic, Dedicated Switch Schematic 17

■ Go To Coil Menu ■■ Single Coil Test ■■ Cycling Coil Test 18
- Partial Coils Detailed Chart ...
- Coil & Flash Lamp Locations, Typical Coil WIring, Bulb Types used for Flash Lamps 19
- Coils Detailed Chart Table 20
- Backbox I/O Power Driver Board Detailed Wiring Diagram 21

■ Go To Lamp Menu ■■ Single Lamp Test ■■ Test All Lamps ■■ Row & Column Lamp Tests 22
- Lamp Matrix Grid
- Lamp Matrix Grid Locations, Typical Lamp Wiring & Schematic, Bulb Types used for Lamps 23

■ Test Flash Lamps ■ Clear Ball Trough 24

■ Technician Alerts (Switch Detection and Pinball Detection) 24-25

■ Begin Play Test ■ Fire Knocker 25

■ Sound / Speaker Test (Speaker Phase Testing) ■ Begin Burn In 26

■ Dot Matrix Test (Dot Matrix Display Explained) 26-27

■ NASCAR® Diagnostics: Track Test, Truck Test and Car Test 27-28

■ Go To Fuse Table (with Example) 29

BACKBOX LAYOUT LOCATIONS: Fuses, Bridges, Relays & ROMs 30

■ Dr. Pinball ■■ Coil Flow Chart ■■ Switch Flow Chart ■■ Lamp Flow Chart 31

Chapter 3, Go To Audits Menu (Overview) 33
- EARNINGS & STANDARD AUDIT TABLES 32

GO TO AUDITS MENU 33

■ Earnings Audits (01-14) .....

■ Standard Audits (01-68) 33-35

■ Feature Audits (01-32) *Feature Audits Subject to Change, see the Dot Display for current Feature Audits* 36

■ Go To Printer Menu ■■ Quick Printout ■■ Full Printout ■■ Reset Printer 37

Chapter 4, Go To Adjustments Menu (Overview) 39
- STANDARD & FEATURE ADJUSTMENT TABLES 38

GO TO ADJUSTMENTS MENU 39

■ Standard Adjustments (01-52) .....

■ Feature Adjustments (01-35) *Feature Adj. Subject to Change, see the Dot Display for current Feature Adj.* 39-46

■ Custom Message (Direct Access to Standard Adjustment 31) 46

Chapter 5, Go To Installs Menu (Overview) 47

GO TO INSTALLS MENU 47

■ Install Extra Easy ■ ... Easy ■ ... Normal ■ ... Hard ■ ... Extra Hard 47

■ ... Directors Cut ■ ... 3-Ball ■ ... 5-Ball ■ $.50 Competition ■ Free Play Competition ■ ... Home Play

■ Film Star Reset ■ ... Novelty ■ ... Add-A-Ball ■ Install Factory 48
- Overview of Standard Adjustment Changes upon selection of an Install: 49
- After selection an Install, go back to the Feature Adj. Menu and note the changes:: 49-50

Chapter 6, Go To Reset Menu (Overview) 51

GO TO RESET MENU 51

■ Reset Coin Audits ■ ... Game Audits ■ ... High Scores ■ ... Grand Champion ■ ... Credits ■ Factory Reset 51
- Example 52

Chapter 7, Go To Tournmament Menu 53

GO TO TOURNAMENT MENU (OPTIONAL USE ONLY) 53
- TOURNAMENT ADJUSTMENT TABLES & TOURNAMENT AUDIT TABLE 54

■ Tournament Adjustments (01-17) 55

■ Start Tournament ■ Stop Tournament ■ Tournament Prizes ■ Tournament Audits (01-14) 56

■ Tournament Audits Continued ■ Sign Messages A-B (Tournie Adj. 16-17) 57

Service Switch Set (Red, Green & Black Buttons) Access & Use

The ***Service Switch Set*** provides access for ***three (3) functions*** available for your use. They are **Volume Menu**, **Service Credits Menu** and **Portals™ Service Menu**. All are accessed separately depending on which colored button (**Red**, **Green** or **Black**) is ***pushed first***.

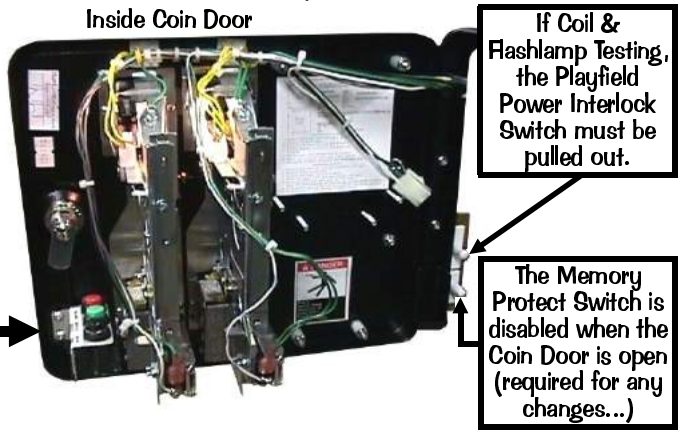

To access any of these ***three (3) functions*** you must first open the **Coin Door** (see pictorial above) with the Game in the ***Attract Mode*** *(not already in any Function or Menu stated below).*

Function 1, Volume Menu

Pushing the ***Red "VOLUME" Button*** first, enters the ***Volume Menu***. While in this Mode, to **DECREASE** the volume, hold down or depress the **Red "LEFT" Button** until desired the volume is achieved; to **INCREASE** the volume, hold down or depress the **Green "RIGHT" Button** until the desired volume is achieved.

*Note: Pushing the **Left** or **Right Flipper Buttons** operates the same as the **Red** or **Green Buttons** of the Service Switch Set, while in this Volume Mode.*

Set between **0-31**; Once your adjustments are made, this menu will ***automatically exit*** a few seconds after the last button depression.

Function 2, Service Credits Menu

Pushing the ***Green "SERVICE CREDITS" Button*** first, adds ***Service Credits*** *(will not affect your audits as "paid" credits).* This is useful for the technician to test games in regular play without affecting the game audits. Each depression adds **1 credit**; up to **50 credits** can be applied. **Std. Adj. 16**, **Credit Limit**, determines this, however, it can be changed from 04-50; *for details see Chapter **4** of this Section **3**.* Once your credits are added, this menu will ***automatically exit*** a few seconds after the last button depression.

*Note: This function is disabled if **Standard Adjustment 30**, **Free Play**, is set to **YES**. The Service Credits are limited to the Credit Limit in addition to any paid credits present in the game (e.g. If the Credit Limit is 30, and there are 8 paid credits present, only 22 Service Credits can be applied.).*

open Adjustments

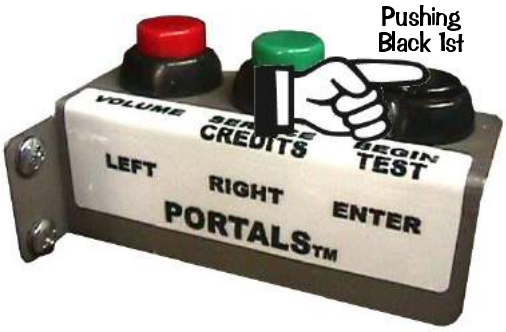

Function 3, Portals™ Service Menu

Pushing the ***Black "BEGIN TEST" Button*** first, enters the ***Portals™ Service Menu***. Once in, navigate through all menus depressing the **Red "LEFT"** or **Green "RIGHT" Buttons**.

*Note: Pushing the **Left** or **Right Flipper Buttons** operates the same as the **Red** or **Green Buttons** of the Service Switch Set, while in this Service Mode.*

Select or *activate* the *Icon* chosen *(the Icon will be "flashing")* by pushing down or depressing the **Black "ENTER" Button**.

*Note: Pushing the **Start Button** operates the same as the **Black Button** of the Service Switch Set, while in this Service Mode.*

Please read *the remainder of this Chapter for more information on the **Portals™ Service Menu**. The remaining six (6) Chapters of this Section explains all **Icons & Menus** in detail. **Read! Read! Read!***

back to Page 8

Portals™ Service Menu Introduction

Important: The ***Dual Switch Bracket*** holds the ***Playfield Power Interlock*** & ***Memory Protect Switches***. It is located just inside the Coin Door frame *(see pictorial of the **Coin Door** on the previous page)*. The Button Switch at the top is the ***Playfield Power Interlock Switch***. It must be pulled out for electro-mechanical device testing or diagnostic purposes (this is required). If this button is pushed in, the ***Playfield Power*** is disabled while the **Coin Door** is **OPEN**. The Button Switch at the bottom is the ***Memory Protect Switch***. It is enabled while the **Coin Door** is **CLOSED**; *meaning any adjustment changes that are made **will not be written to memory***. If changing adjustments is required, ensure the **Coin Door** is **OPEN** to disable this switch, thus allowing for desired changes.

How to Use This Section

This section will cover all functions available in the **Portals™ Service Menu** in a *Step-By-Step* process. This section is divided into chapters which coincide with the **MAIN MENU**. The previous and following pages in this Chapter will instruct the operator on how to move through the Menus. It's simple, easy and fun to use!

To get into the **Service Menu Mode** review **"Function 3, Portals™ Service Menu"** on the previous page. After Power-Up, push down the **Black "BEGIN TEST" Button** to begin. Looking at the display you will momentarily see "**Service Menu**" with a *satellite flying from right to left pulling a banner* "**Portals©™**" followed by the **MAIN MENU**:

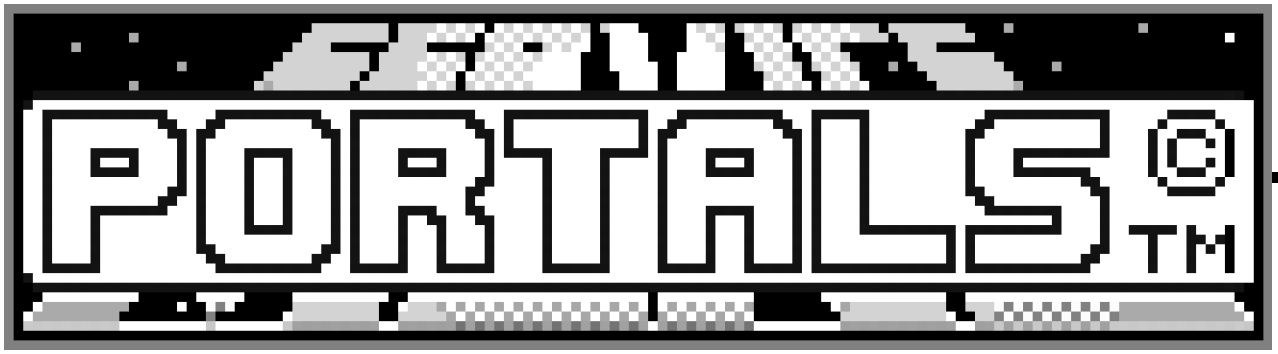

Use the **Red "LEFT" & Green "RIGHT" Buttons** (or **Left** & **Right Flipper Buttons**) to move the selected ***Icon*** left or right, and the **Black "ENTER" Button** (or **Start Button**) to activate the selected ***Icon***. The use of the Service Switch Set (**Red**, **Green**, & **Black Buttons**) *is required* in **Switch Test** or **Active Switch Test**, as the **Start & Flipper Buttons** are a part of this test.

The **MAIN MENU** now appears with the "DIAG" *Icon* (**GO TO DIAGNOSTICS MENU**) flashing:

As the operator views the Menu Screen(s), the MORE MORE symbols indicates that there are more *Icons* to select in each direction. The *Icon* selected will blink. Pushing the **Black "ENTER" Button** (or **Start Button**) will select the *Icon* and the Menu Screen will change to the menu selected. Select the **"PREV"** *Icons* to move backwards through the menu levels. Select the **"QUIT"** *Icon* to completely exit the Service Mode.

View the **Portals™ Service Menu Icon Tree** on the next pages for a complete overview of all menus used in this system. The "HELP" *Icon* & "?" *Mini-Icon* provide explanation of **ICON** usage in the Menu where the "HELP" *Icon* or "?" *Mini-Icon* was selected. View **QUIT THIS SESSION** (**Exiting the Portals™ Service Menu**) at the end of this chapter *(reference Section **3**, Chapter **1**, **Portals™ Service Menu Introduction**)*.

The **chapters** in this **section**, which coincide with the **MAIN MENU**, will also provide more detailed information. ***Use both the manual and the display to help customize, troubleshoot and/or diagnose faults, if any.***

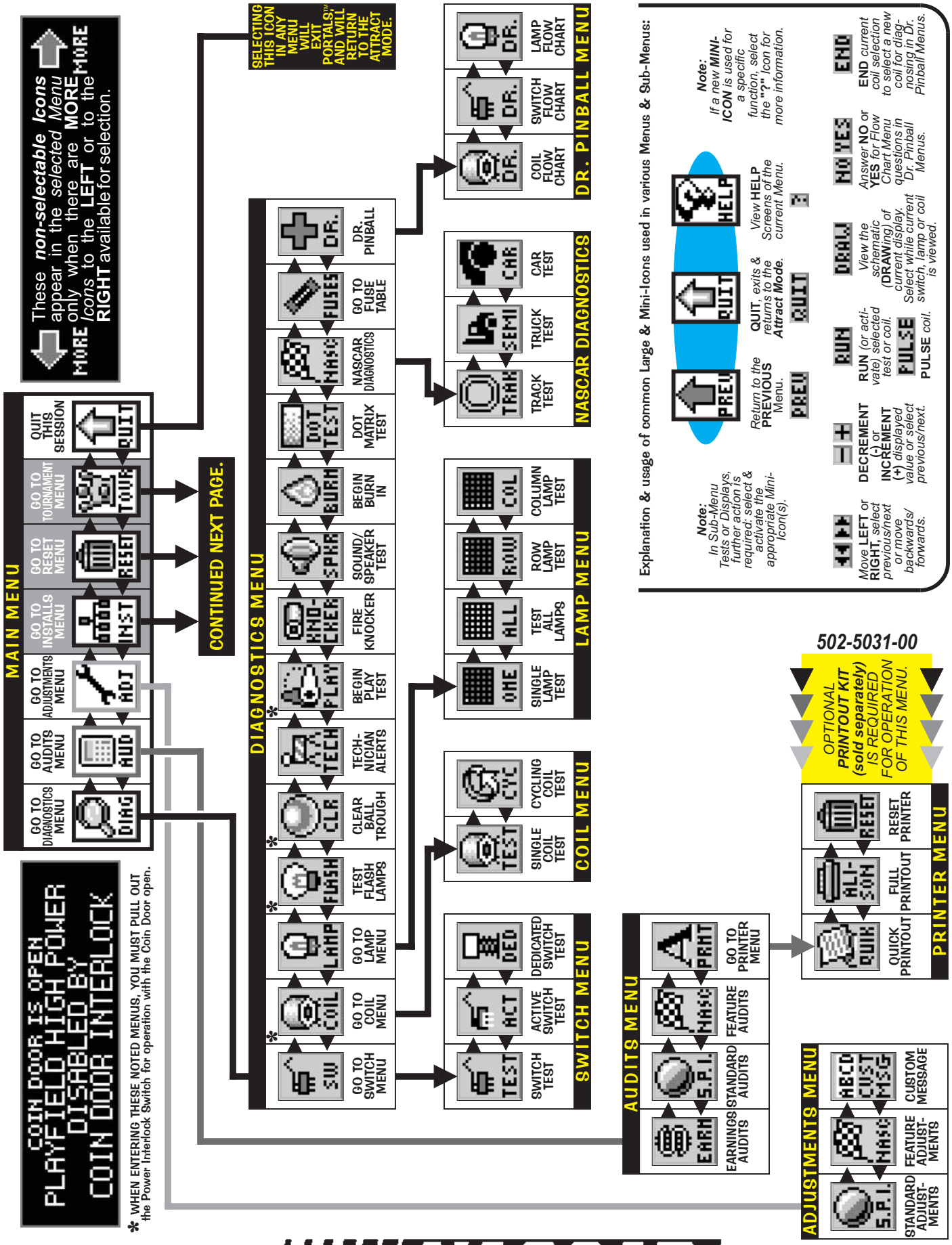
MAIN MENU
GO TO DIAGNOSTICS MENU
GO TO AUDITS MENU
GO TO ADJUSTMENTS MENU
GO TO INSTALLS MENU
GO TO RESET MENU
GO TO TOURNAMENT MENU
QUIT THIS SESSION
These non-selectable Icons appear in the selected Menu only when there are MORE Icons to the LEFT or to the RIGHT available for selection.
MORE
MORE
SELECTING THIS ICON IN ANY MENU WILL EXIT PORTALS™ AND WILL RETURN TO THE ATTRACT MODE.
CONTINUED NEXT PAGE.
COIN DOOR IS OPEN
PLAYFIELD HIGH POWER DISABLED BY
COIN DOOR INTERLOCK
* WHEN ENTERING THESE NOTED MENUS, YOU MUST PULL OUT the Power Interlock Switch for operation with the Coin Door open.
DIAGNOSTICS MENU
GO TO SWITCH MENU
GO TO COIL MENU
GO TO LAMP MENU
TEST FLASH LAMPS
CLEAR BALL TROUGH
TECH-NICIAN ALERTS
BEGIN PLAY TEST
FIRE KNOCKER
SOUND/ SPEAKER TEST
BEGIN BURN IN
DOT MATRIX TEST
NASCAR DIAGNOSTICS
GO TO FUSE TABLE
DR. PINBALL
SWITCH TEST
ACTIVE SWITCH TEST
DEDICATED SWITCH TEST
SWITCH MENU
SINGLE COIL TEST
CYCLING COIL TEST
COIL MENU
SINGLE LAMP TEST
TEST ALL LAMPS
ROW LAMP TEST
COLUMN LAMP TEST
LAMP MENU
TRACK TEST
TRUCK TEST
CAR TEST
NASCAR DIAGNOSTICS
COIL FLOW CHART
SWITCH FLOW CHART
LAMP FLOW CHART
DR. PINBALL MENU
Explanation & usage of common Large & Mini-Icons used in various Menus & Sub-Menus:
Move LEFT or RIGHT, select previous/next or move backwards/ forwards.
Return to the PREVIOUS Menu.
DECREMENT (-) or INCREMENT (+) displayed value or select previous/next.
QUIT, exits & returns to the Attract Mode.
RUN (or activate) selected test or coil.
View HELP Screens of the current Menu.
View the schematic (DRAWing) of current display. Select while current switch, lamp or coil is viewed.
PULSE coil.
Note: In Sub-Menu Tests or Displays, further action is required: select & activate the appropriate Mini-Icon(s).
Note: If a new MINI-ICON is used for a specific function, select the "?" Icon for more information.
Answer NO or YES for Flow Chart Menu questions in Dr. Pinball Menus.
END current coil selection to select a new coil for diagnosing in Dr. Pinball Menus.
502-5031-00
OPTIONAL PRINTOUT KIT (sold separately) IS REQUIRED FOR OPERATION OF THIS MENU.
PRINTER MENU
QUICK PRINTOUT
FULL PRINTOUT
RESET PRINTER
AUDITS MENU
EARNINGS AUDITS
STANDARD AUDITS
FEATURE AUDITS
GO TO PRINTER MENU
ADJUSTMENTS MENU
STANDARD ADJUST-MENTS
FEATURE ADJUST-MENTS
CUSTOM MESSAGE

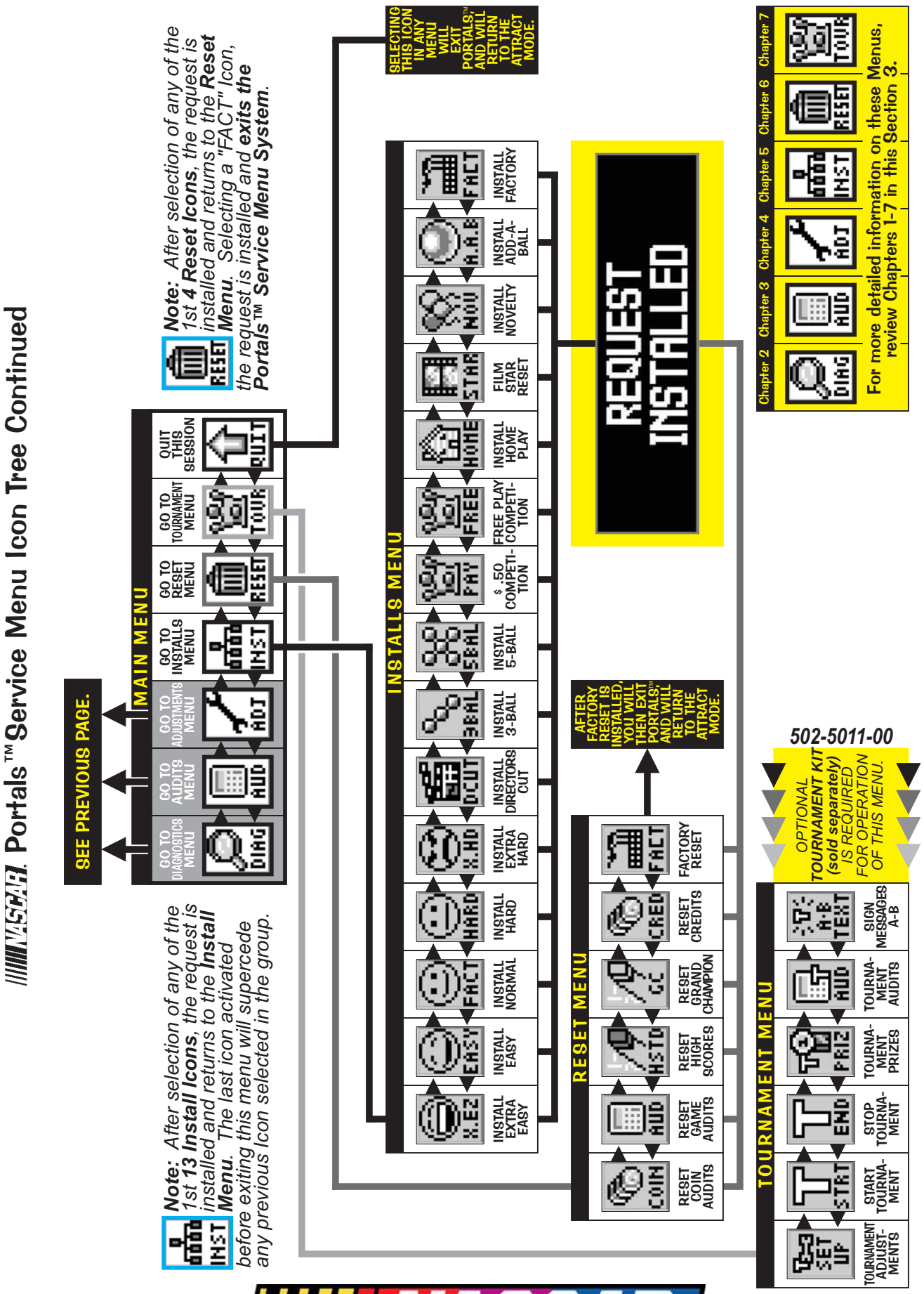
NASCAR Portals™ Service Menu Icon Tree Continued
SEE PREVIOUS PAGE.
MAIN MENU
GO TO DIAGNOSTICS MENU
GO TO AUDITS MENU
GO TO ADJUSTMENTS MENU
GO TO INSTALLS MENU
GO TO RESET MENU
GO TO TOURNAMENT MENU
QUIT THIS SESSION
Note: After selection of any of the 1st 13 Install Icons, the request is installed and returns to the Install Menu. The last icon activated before exiting this menu will supercede any previous Icon selected in the group.
Note: After selection of any of the 1st 4 Reset Icons, the request is installed and returns to the Reset Menu. Selecting a "FACT" Icon, the request is installed and exits the Portals™ Service Menu System.
SELECTING THIS ICON IN ANY MENU WILL EXIT PORTALS™ AND WILL RETURN TO THE ATTRACT MODE.
INSTALLS MENU
INSTALL EXTRA EASY
INSTALL EASY
INSTALL NORMAL
INSTALL HARD
INSTALL EXTRA HARD
INSTALL DIRECTORS CUT
INSTALL 3-BALL
INSTALL 5-BALL
$ .50 COMPETI-TION
FREE PLAY COMPETI-TION
INSTALL HOME PLAY
FILM STAR RESET
INSTALL NOVELTY
INSTALL ADD-A-BALL
INSTALL FACTORY
REQUEST INSTALLED
AFTER FACTORY RESET IS INSTALLED, YOU WILL THEN EXIT PORTALS™ AND WILL RETURN TO THE ATTRACT MODE.
RESET MENU
RESET COIN AUDITS
RESET GAME AUDITS
RESET HIGH SCORES
RESET GRAND CHAMPION
RESET CREDITS
FACTORY RESET
Chapter 2
Chapter 3
Chapter 4
Chapter 5
Chapter 6
Chapter 7
For more detailed information on these Menus, review Chapters 1-7 in this Section 3.
502-5011-00
OPTIONAL TOURNAMENT KIT (sold separately) IS REQUIRED FOR OPERATION OF THIS MENU.
TOURNAMENT MENU
TOURNAMENT ADJUST-MENTS
START TOURNA-MENT
STOP TOURNA-MENT
TOURNA-MENT PRIZES
TOURNA-MENT AUDITS
SIGN MESSAGES A-B
Sec. 3: ...Menu Intro.

Portals™ Service Menu Example

This example will demonstrate activation of *Icons* in the **DIAGNOSTICS MENU**. The example will show activation of the "SW" *Icon* (**GO TO SWITCH MENU**). In this menu, the switches can be tested individually and also all active switches can be tested. Use the same technique to access all the *Icons* in the **Portals™ Service Menu**. Follow **Portals™ Service Menu Icon Tree** on the previous pages as a guide to help navigate through the entire system *(Also, go to the chapter in this manual explaining the icon(s) selected.).*

If the display is in any other menu other than the **MAIN MENU**, use the **Red "LEFT"** & **Green "RIGHT" Buttons** to select the "PREV" *Icon* and press the **Black "ENTER" Button** to *activate* the **ICON** thus moving back to the previous menu. Do so until **MAIN MENU** appears.

Chapters **2** through **7** will cover all menu items within the **Portals™ Service Menu**. The *Icon* is shown preceding the text. Find the *Icon* in the **Portals™ Service Menu** by navigating with the **Red** or **Green Buttons**. Each chapter started is from the **MAIN MENU**. Within the chapter, and Sub-Menu will be covered sequentially with their explanation & function. If the operator *"gets lost"*, select and *activate* the "PREV" *Icon* until the display indicates **MAIN MENU**. For more help on Button Usage, select & *activate* the "HELP" *Icon* or "?" *Mini-Icons.*

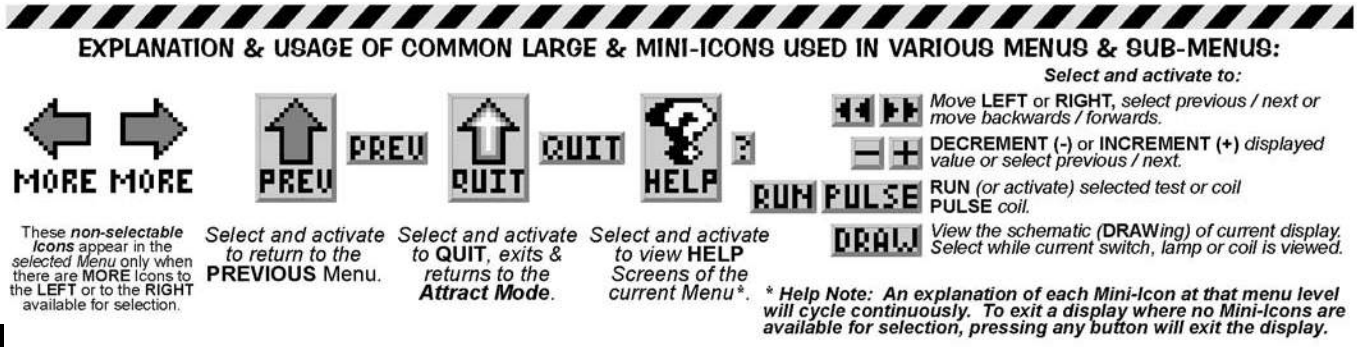

Example:

After entering **Portals™**, the **MAIN MENU** now appears with the **"DIAG"** *Icon* (**GO TO DIAGNOSTICS MENU**) flashing:

Press the **Black "ENTER" Button** to *activate* this **ICON**. The **DIAGNOSTICS MENU** now appears with the "SW" *Icon* (**GO TO SWITCH MENU**) flashing:

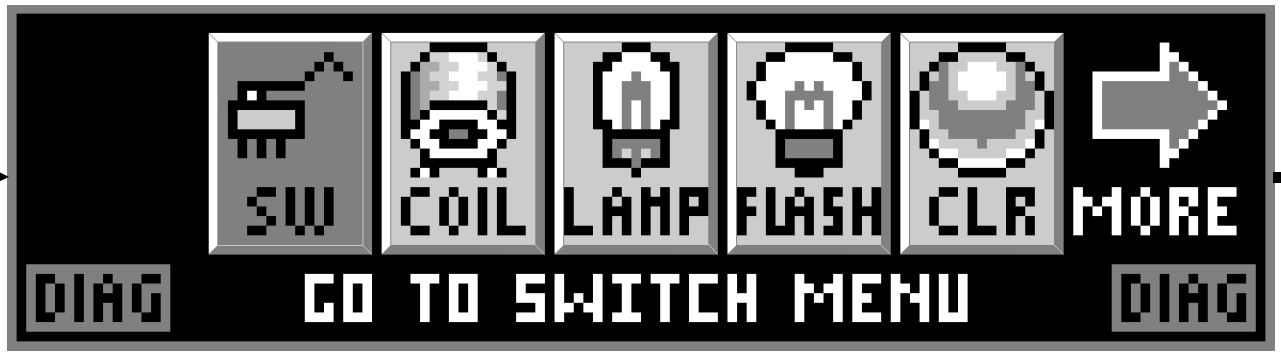

Press the **Black Button** to *activate* this **ICON**. The **SWITCH TEST MENU** now appears with the "TEST" *Icon* (**SWITCH TEST**) flashing:

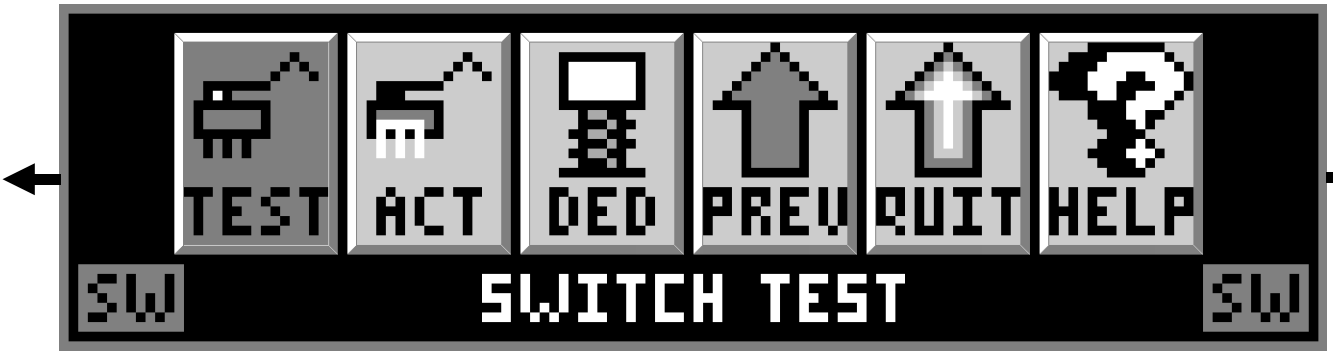

Press the **Black "ENTER" Button** to *activate* this icon. The **Switch Test Display** now appears.

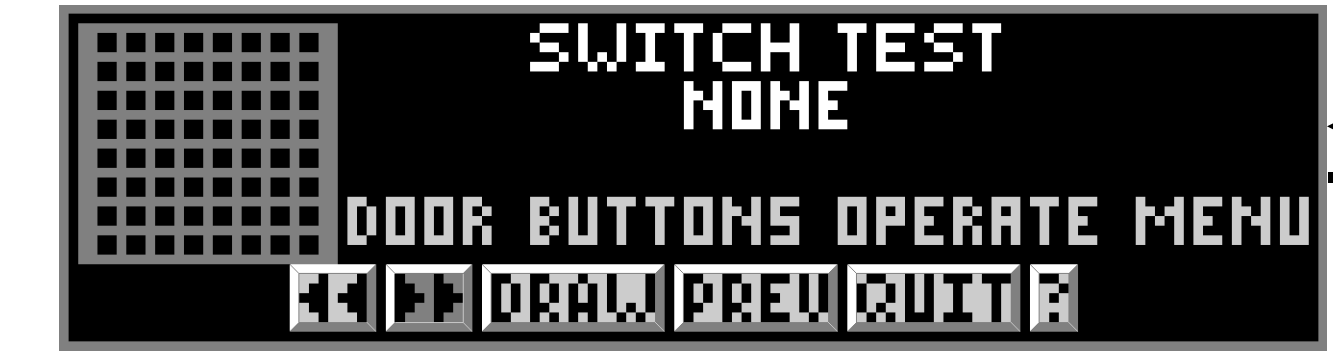

All switches can be tested one at a time. When possible, use a pinball to close any playfield switches; rolling the ball at Stand-Up Targets or over/under switches is suggested. Use finger for all non-playfield switches. As each switch is closed, the respective Switch Matrix Grid Position (1-64) will be lit.

To view the schematic for the switch selected, press either the **Red** or **Green Button** to select the "DRAW" *Mini-Icon*. Press the **Black Button** to *activate* this *Mini-Icon*; do so while the switch is momentarily closed. This will bring up the **Switch Schematic Display**. The display describes the switch in the Switch Matrix which includes the name of the switch, the Return (Row) Wire and the Drive (Column) Wire, drive transistor, and the "Pin-Outs" from the CPU/Sound Board. *Activating* the "DRAW" *Icon* when a switch is not closed, will give the generic switch schematic as shown below.

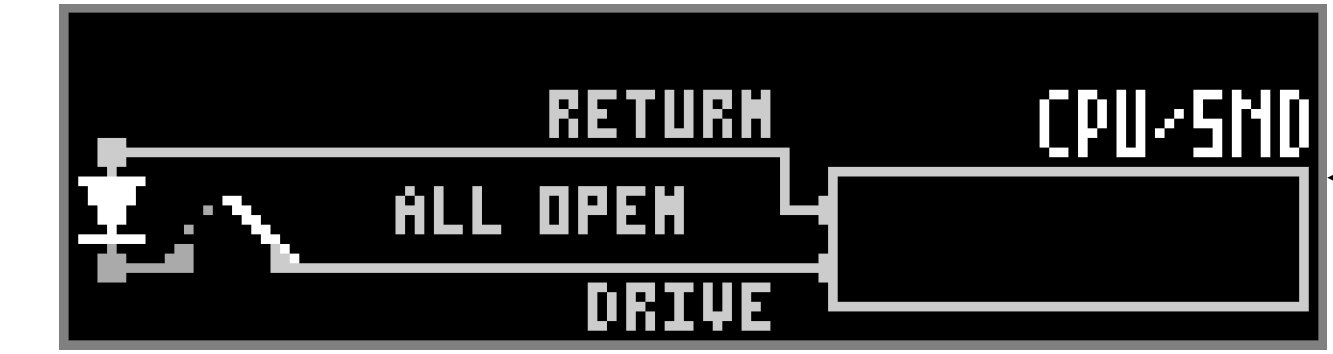

To ***exit any display where there are no Mini-Icons*** *(Schematics or Help Displays)*, ***press any button*** to return to the previous Menu.

While in **Switch Test** or **Active Switch Test**, the **Flipper & Start Buttons** are deactivated (because they can be part of these tests). Use the **Red "LEFT,"** **Green "RIGHT"** and/or **Black "ENTER" Buttons** to select and *activate* the "**MINI-ICONS**" at the bottom of the display. In **Switch Test**, if the "<<" or ">>" *Mini-Icon* is *activated*, the display will go to (slip between) the previous tests *(Active & Dedicated Switch Tests).* Use either the **Red** or **Green Button** to select the "PREV" *Mini-Icon.* Press the **Black "ENTER" Button** to return to **Switch Test Menu**. To exit out of this Sub-Menu, select and *activate* the "PREV" *Icon* in the Menu. The **DIAGNOSTICS MENU** now appears with the "SW" *Icon* (**GO TO SWITCH MENU**) flashing. Go through other ***Diagnostics*** selections or exit.

To exit the **Portals™ Service Menu**, select & *activate* the "QUIT" *Icon (see the next page).*

QUIT THIS SESSION (Exiting the Portals™ Service Menu)

In the **MAIN MENU** and in all **SUB-MENUS**, if the "QUIT" *Icon* or "QUIT" *Mini-Icon* is selected and *activated*, the **Portals™ Service Menu Session** will be exited and returned to the ***Attract Mode***.

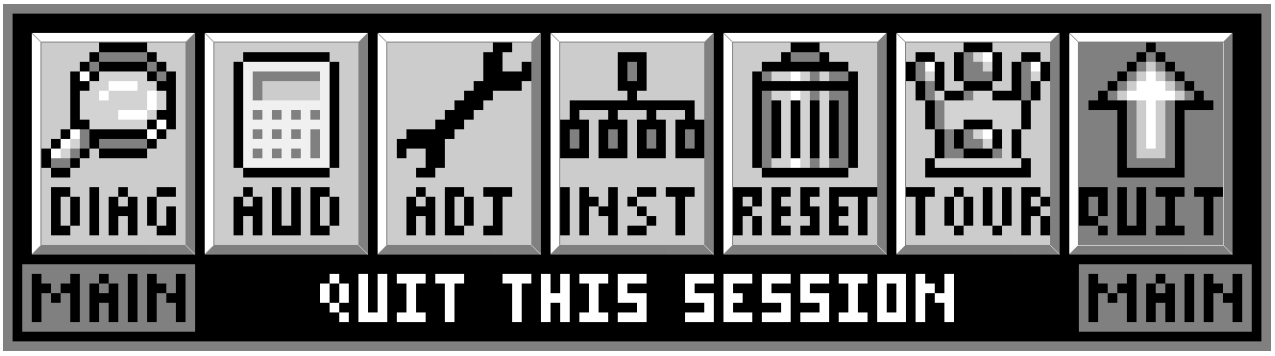

LOOK

Exiting **Portals™** or turning game on/off will start the *Power-Up Routine.* Upon **Power-Up**, ***HOLD IN THE RIGHT FLIPPER BUTTON*** to view the CPU Game & Display Code Versions (+ Check-Sums), followed by the Location & Game ID Numbers and Alerts, if any *(see Sec. **3**, Chp. **2**, **GO TO DIAGNOSTICS MENU**, **Technician Alerts**).*

LOOK

The below **Problem / Solution Table** was designed to answer some common problems frequently asked.

Problem / Solution Table

PROBLEM	SOLUTION
Will not enter the **Service Mode** after depressing the **Black "BEGIN TEST" Button**.	• Check the Service Switch(es) (**Red, Green & Black Buttons**) for loose connections or bad Ground. • Check the associated wiring harness to/from the CPU/Sound Board, Connector **CN6**. • Check CPU/Sound Board for possible failure.
All Service Buttons (**Red, Green** and **Black**) appear nonfunctional.	• Check the Service Switches wiring harness for poor or no connection and/or broken wires.
The **Green Service Button** in the Attract Mode will not enter the **SERVICE CREDITS MENU** to add Service Credits.	• Check to make sure the Game is not in "**Free Play**." *If the game is set to Free Play, adding Service Credits is not required.* • Check the Service Switches wiring harness for poor or no connection and/or broken wires.
The **Display** "blanks out."	• Check the Dot Matrix Display for loose wiring harness for poor or no connection and/or broken wires. • Check **F1** (3/4A Fuse) on the Display Power Supply Board. Refer to Section **5**, Chapter **4**, **SCHEMATICS & TROUBLESHOOTING**.
Icons *"scroll"* along continuously in the **MAIN MENU**.	• Check for a stuck switch on the **Green Button**. • If the Service Switch Set and/or the Coin Door was replaced, ensure the Locking Mechanism on the **Green Button** was removed. If the Green Button "clicks" and locks into an up/down position, the **Green Button** has this lock switch. Remove it. (Ref. to Svc. Bulletin #74.)
The **Start** and **Flipper Buttons** do not select or activate *Icons* in the **SWITCH TEST MENU**.	• This is normal. These switches are deactivated, as they are a part of the Switch Test. Use the **Red "LEFT"** or **Green "RIGHT" & Black "ENTER" Buttons** in this Sub-Menu. Refer to Section **3**, Chapter **2**, **GO TO DIAGNOSTICS MENU**, **Switch Test**.
Can't move selection of *Icon* with the **Left** and/or **Right Flipper Buttons**.	• Check the **Flipper Buttons** for loose connections or bad Ground and refer to Section **5**, Chapter **2**, Playfield Wiring, #-Flipper Circuit Wiring Diagram. • This is normal ***only*** in ***Diagnostic's Switch & Active Switch Tests*** *(see previous Problem).*
Some *Icons* appear non-functional in the **PRINTER MENU(S)**.	• If no printing equipment is connected, the "-" *Icon*, "+" *Icon* and "RUN" *Icon* will appear not to function. Refer Section **3**, Chapter **3**, **GO TO PRINTER MENU**.
Some *Icons* appear non-functional in the **GAME SPECIFIC MENU** under the **DIAGNOSTICS MENU**.	• If there is no other test under this Menu, the "<<" & ">>" *Mini-Icons* will appear not to function. The remaining *Icons* should function as normal. ***Note:*** *If there is no "Go To (Game Name) Test(s), the "GAME NAME" Icon will not invoke another display.*
The display returns to the **ATTRACT MODE** exiting the Service Session after a **FACTORY RESET**.	• This is normal. After a **FACTORY RESET**, the Service Session is automatically exited. Refer to Section **3**, Chapter **6**, **GO TO RESET MENU**, **Factory Reset**.
In **COIL TEST MENU**, the coils and flashlamps ***do not*** fire after activating the "RUN" *Icon*.	• Ensure the **POWER INTERLOCK SWITCH** ***is pulled out*** *(see the start of this Chapter).*
In **ADJUSTMENTS MENU**, with the Coin Door **CLOSED**, adjustments are not getting changed as desired (using the **Flipper** & **Start Buttons**).	• This is normal. The ***Memory Protect Switch*** is enabled when the Coin Door is **CLOSED**. Changes can be made with the Coin Door **OPEN** only.
In **Portals™ Service Menu**, the volume cannot be adjusted with the **Red** or **Green Buttons**.	• The Volume adjustment can only be made when in the **Attract Mode**. The **Volume Mode** is entered by pressing the **Red "VOLUME" Button**. Then use the **Red "LEFT"** to decrease / decrement (-) or **Green "RIGHT" Button** to increase / increment (+) the volume.
In **Portals™ Service Menu**, the display seems to lock up, or the Help Display appears to be non-functional.	• If you cannot clear the situation by exiting back one Menu, exit completely out of the **Portals™ Service Menu**, and re-enter. If the problem persists, call Technical Support for additional help.

Go To Diagnostics Menu

Overview

The **Portals™ Service Menu System** provides tests for sounds, display, lamps, switches and coils. Each feature may be tested manually or automatically after entering the **Portals™ Service Menu** *(see Chapter **1** of this Section)*. The automatic tests (e.g. **Cycling Coils**, **Test Flash Lamps**) may be used for a quick verification of automatic test functions and the manual tests (**Begin Play Test**, **Single Lamp** / **All** / **Row** / **Column Tests**, and **'Game Name' Tests**) may be used for troubleshooting. All *Icons* and there usages are explained throughout this chapter in order.

Important: *Upon **Power-Up** (Game Reset) or opening the **Coin Door** watch the **Display** for any **Alerts.****

If this ***display flashes***, the game is indicating that **CMOS RAM** memory (CPU Loc. U212) has been corrupted. This is caused be either failure in memory *(e.g. batteries are dead and/or faulty **RAM**)* or upon installation of updated version of game code. Opening the **Coin Door** will initiate a *Factory Restore (Reset)*, by opening the ***Memory Protect Switch***. Check battery voltage at **VBATT Test Point** on the **CPU/Sound Bd.** *(more details in Sec. **5**, Chp. **4**, **PCBs**).*

This ***flashing display*** is shown immediately upon opening the **Coin Door** as a reminder that **20v/50v DC** power to the playfield is **disabled**. All electro-mechanical devices *(such as Coils)* ***cannot be tested*** with the switch pushed in. **PULL OUT** the **Power Interlock Switch** ***ONLY*** if you're in a ***Testing Menu*** requiring power. See ***Access & Use*** in Chapter **1** of this Section for the location of this switch. *Closing the **Coin Door** will automatically reset this switch.*

This ***display*** is shown momentarily during **Game Mode** or **Power-Up** to alert the operator of a coil malfunction *(coil doesn't energize or coil fires a multiple number of times)*. **OPERATOR ALERT!** works by monitoring any *switch activated coil* that has the potential to trap a ball when disabled *(more details in this Chapter, **Technician Alerts**, **Pages 24-25**).*

* If this ***Tech Report Alert flashes*** *(along with an audible sound),* the game has detected faulty switches and/or missing pinballs. Select the "TECH" *Icon* for information *(review **Technician Alerts**, **Pages 24-25**).*
** For this **Alert display** to appear, Standard Adj. **49**, **must be changed** to **POWERUP**, **COIN DOOR** or **POWERUP AND COIN DOOR**, the default is **NEVER** (review Section **3**, Chp. **4**, **GO TO ADJUSTMENTS MENU**, Standard Adjustments, Page **44**).*

⚠ **CAUTION:** Remove all pinballs from the Ball Trough prior to lifting the playfield to it's full upright position for servicing. **PULL OUT** the **Power Interlock Switch** for operation. To eject pinballs, select the "DIAG" *Icon* from the **MAIN MENU** to go to the **DIAGNOSTICS MENU**, then select the "CLR" *Icon* to enter the **CLEAR BALL TROUGH MENU**. Select the "RUN" *Mini-Icon* and press the **Black "ENTER" Button** *or* **Start Button** to remove one pinball at a time *(this feature also useful to retrieve a pinball for game testing in **Begin Play Test** & **Game Specific Tests**).*

EXPLANATION & USAGE OF COMMON LARGE & MINI-ICONS USED IN VARIOUS MENUS & SUB-MENUS:

GO TO DIAGNOSTICS MENU

After entering **Portals™**, the **MAIN MENU** now appears. To initiate, from the **MAIN MENU**, select the "DIAG" *Icon* with either the **Red "LEFT"** or **Green "RIGHT" Buttons** (the **Flipper Buttons** operates in the same manner) and press the **Black "ENTER" Button** (the **Start Button** operates in the same manner). The **DIAGNOSTICS MENU** appears. Continue through this chapter for the explanation & usage of the *Icons* in the **DIAGNOSTICS MENU**. ***Usage Note:*** *Only in Switch & Active Switch Tests, the **Flipper & Start Buttons cannot be used** as the alternate navigation buttons as they are a part of these tests.* After exiting these tests, the **Left** & **Right Flipper** and **Start Buttons** can once again be used. Continue through this chapter for the explanation & usage of the *Icons* in the **DIAGNOSTICS MENU**.

Go To Switch Menu

To initiate, from the **DIAGNOSTICS MENU**, select the "SW" *Icon* with either the **Red "LEFT"** or **Green "RIGHT" Buttons** and press the **Black "ENTER" Button**. Switches are configured in an 8 x 8 Matrix of Columns (Switch Drives) and Rows (Switch Returns) with up to **64** possible switches. The **SWITCH TEST MENU** consists of three (3) parts: **Switch Test**, **Active Switches** & **Dedicated Switch Test**. ***Reminder:*** *The **Flipper & Start Buttons** (part of Switch Tests) cannot be used as **navigation buttons** during these test(s)*

Switch Test

To initiate, from the **SWITCH MENU**, select the "TEST" *Icon* with either the **Red** or **Green Buttons** & press the **Black Button**. In **Switch Test**, close each switch and observe the display. The display will describe the switch in the Switch Matrix Grid *(below),* which includes the switch name, Return (Row) Wire, Drive (Column) Wire and the "Pin-Outs" from the **CPU/Sound Board**. When the switch is closed, the information if displayed momentarily. To view the schematic for the switch selected, press either the **Red** or **Green Button** to select the "DRAW" *Mini-Icon*. Press the **Black Button** to *activate* this *Mini-Icon*; do so while the switch is momentarily closed. To return to **Switch Test**, press the **Black Button** again.

Active Switch Test

To initiate, from the **SWITCH MENU**, select the "ACT" *Icon* with either the **Red** or **Green Buttons** & press the **Black Button**. If still in a previous test, select the "PREV" *Mini-Icon* to return to **SWITCH MENU** or select either of the "<<" or ">>" *Mini-Icons* to move through the tests. In **Active Switch Test**, if any switches are stuck closed *(or made from the presence of a pinball),* the display sequences through the Switch Names, Return (Row) Wire, Drive (Column) Wire, Drive Transistor, Part Number and the "Pin-Outs" from the **CPU/Sound Board**. This cycle continues until all switches are cleared or until the test is exited.

Dedicated Switch Test

To initiate, from the **SWITCH MENU**, select the "DED" *Icon* with either **Flipper Button** & press the **Start Button** *(the Service Switches are deactivated during this test.).* In **Dedicated Switch Test**, the display will describe the switch which includes the Switch Name, Return (Row) Wire, Drive (Column) Wire, Part Number and the "Pin-Outs" from the **CPU/Sound Board**.

SWITCH MATRIX GRID & DEDICATED SWITCHES

Row (Return) / Column (Drive)	1: Q1 GRN-BRN CN5-P1	2: Q2 GRN-RED CN5-P3	3: Q3 GRN-ORG CN5-P4	4: Q4 GRN-YEL CN5-P5	5: Q5 GRN-BLK CN6-P5	6: Q6 GRN-BLU CN5-P7	7: Q7 GRN-VIO CN5-P8	8: Q8 GRN-GRY CN5-P9
1: U400 WHT-BRN CN7-P9	1 Cabinet Side LT BUTTON (UK ONLY) 180-5160-01	9 NOT USED	17 Below P/F TOP DROP TARGET (DOTS) 180-5158-00	25 Below P/F RIGHT ORBIT 500-6227-02	33 Above P/F LEFT SPINNER 180-5010-04	41 NOT USED	49 Below P/F LEFT BUMPER 180-5015-04	57 Below P/F LEFT OUTLANE 500-6227-01
2: U400 WHT-RED CN7-P8	2 Coin Door 4TH COIN SLOT 180-5204-00	10 NOT USED	18 Below P/F MIDDLE DROP TARGET (DOTS) 180-5158-00	26 Below P/F LEFT ORBIT 500-6227-02	34 Above P/F LOWER ACCELERATOR RIGHT (OPTO) *See Sw. 34 Note*	42 Above P/F RIGHT SPINNER 180-5010-04	50 Below P/F RIGHT BUMPER 180-5015-04	58 Below P/F LEFT RETURN LANE 500-6227-02
3: U400 WHT-ORG CN7-P7	3 Coin Door 6TH COIN SLOT *Future Use*	11 Below P/F 4-BALL TROUGH #1 (LEFT) 180-5119-02	19 Below P/F BOTTOM DROP TARGET (DOTS) 180-5158-00	27 Below P/F PIT LOCK MIDDLE 180-5179-00	35 Above P/F LOWER ACCELERATOR MID. (OPTO) *See Sw. 35 Note*	43 Below P/F RIGHT STANDUP 500-5857-06	51 Below P/F BOTTOM BUMPER 180-5015-04	59 Below P/F LEFT SLINGSHOT 180-5054-00 (x2)
4: U400 WHT-YEL CN7-P6	4 Coin Door RIGHT COIN SLOT 180-5204-00	12 Below P/F 4-BALL TROUGH #2 180-5119-02	20 Above P/F WINDMILL MOTOR OPTO *See Sw. 20 Note*	28 Below P/F PIT LOCK TOP 180-5178-00	36 Below P/F TEST CAR STANDUP X2 515-5162-06	44 Below P/F CENTER STANDUP 500-5857-06	52 Below P/F GARAGE VUK (DOTS) 180-5116-01	60 Below P/F RIGHT OUTLANE 500-6227-02
5: U401 WHT-GRN CN7-P5	5 Coin Door CENTER COIN SLOT / DBA 180-5204-00	13 Below P/F 4-BALL TROUGH #3 180-5119-02	21 Backpanel LEFT RAMP MAKE OPTO *See Sw. 21 Note*	29 Below P/F MIDWAY EJECT (DOTS) 180-5116-01	37 Above/Below LOWER ACCELERATOR LEFT (OPTO) See Sw. 37 Note	45 Below P/F LEFT STANDUP 500-5857-06	53 In Cabinet *SLAM TILT (OPT)* (KIT) 180-	61 Below P/F RIGHT RETURN LANE 500-6227-01
6: U401 WHT-BLU CN7-P3	6 Coin Door LEFT COIN SLOT 180-5204-00	14 Below P/F 4-BALL TROUGH VUK OPTO *See Sw. 14 Note*	22 NOT USED	30 Below P/F TRACK EXIT POPPER (DOTS) 180-5116-01	38 Below P/F CAPTIVE BALL STANDUP 500-5232-06	46 NOT USED	54 In Cabinet START BUTTON 180-5174-00	62 Below P/F RIGHT SLINGSHOT 180-5054-00 (x2)
7: U401 WHT-VIO CN7-P2	7 **Coin Door** 5TH COIN SLOT *Future Use*	15 **Below P/F** 4-BALL STACKING OPTO *See Sw. 15 Note*	23 Above P/F TRUCK RAMP KICKER 180-5057-00	31 NOT USED	39 Below P/F CAR MECH DOWN 180-5201-00	47 Above P/F UPPER ACCELERATOR TOP (OPTO) See Sw. 47 Note	55 In Cabinet *TOURNA-MENT START* (KIT) 180-5174-00	63 NOT USED
8: U401 WHT-GRY CN7-P1	8 Cabinet Side RT BUTTON (UK ONLY) 180-5160-01	16 Above P/F SHOOTER LANE 180-5200-00	24 Above P/F RIGHT RAMP (TO) DIVERTER 180-5010-04	32 Above/Below PIT LOCK BOTTOM (OPTO) See Sw. 32 Note	40 Below P/F TEST CAR 180-5010-04	48 Above/Below UPPER ACCELERATOR BOT. (OPTO) See Sw. 48 Note	56 In Cabinet PLUMB BOB TILT *See Sw. 56 Note*	64 NOT USED

IC U206 INPUTS / GROUND	GROUND BLK CN6-P1, -P11
1: U206 GRY-BRN CN6-P2	DS-1 on Cabinet Side #1 LEFT FLIPPER BUTTON 180-5160-01
2: U206 GRY-RED CN6-P3	DS-2 Below Playfield #2 LEFT FLIPPER E.O.S (End-of-Stroke) 180-5149-00 *on Flipper*
3: U206 GRY-ORG CN6-P4	DS-3 on Cabinet Side #3 RIGHT FLIPPER BUTTON 180-5160-01
4: U206 GRY-YEL CN6-P6	DS-4 Below Playfield #4 RIGHT FLIPPER E.O.S. (End-of-Stroke) 180-5149-00 *on Flipper*
5: U206 GRY-GRN CN6-P7	DS-5 NOT USED
6: U206 GRY-BLU CN6-P8	DS-6 on Coin Door #6 VOLUME (RED BUTTON) (In Test: LEFT) 180-5192-02
7: U206 GRY-VIO CN6-P9	DS-7 on Coin Door #7 SERV. CRED. (GREEN BUTTON) (In Test: RIGHT) 180-5192-04
8: U206 GRY-BLK CN6-P10	DS-8 on Coin Door #8 BEGIN TEST (BLACK BUTTON) (In Test: ENTER) 180-5192-00

SWITCH MATRIX GRID LOCATIONS

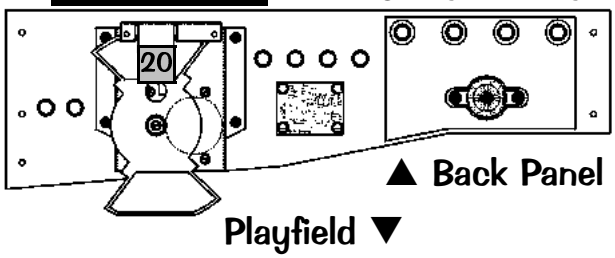

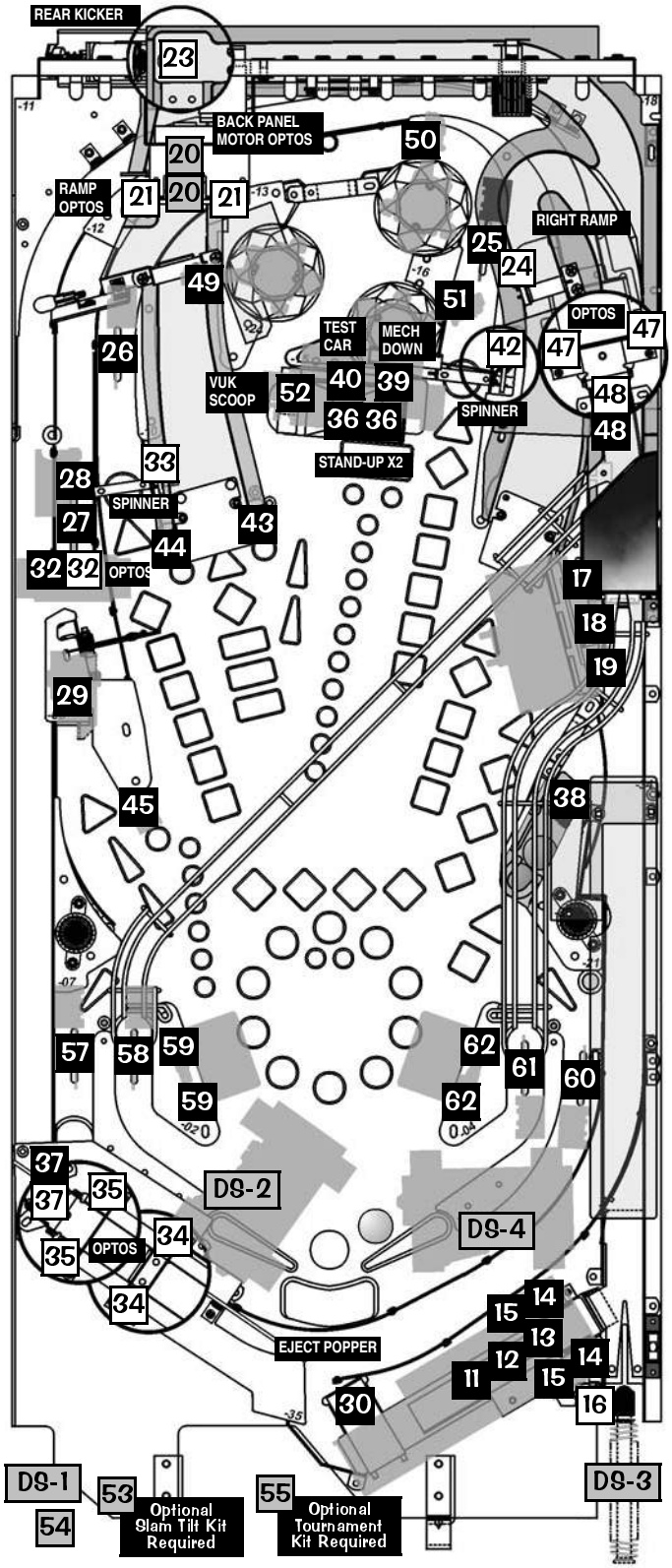

Typical Switch Wiring & Schematic

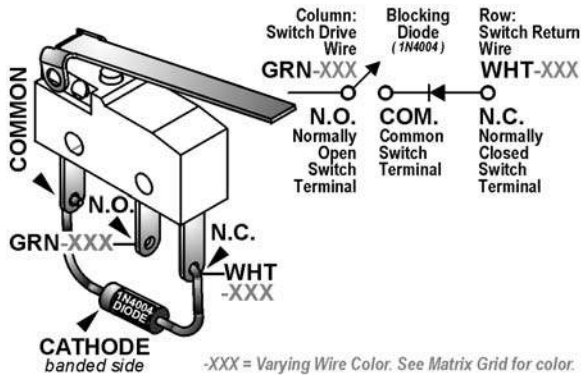

Dedicate Switch Schematic

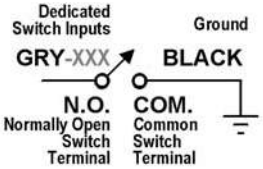

= Switches above Playfield.

= Switches below Playfield.

= Switches not on Playfield.

Switch Part Notes: *¥ Yen Coin Switch is 180-5091-00. Part Numbers which start with 515- or 500- include the bracket, target, and/or housing.*
Switches 14, 15, 18, 23 & 24 Part Note: *Transmitter & Receiver OPTO PC Boards are used as Switches: Transmitter: 515-0173-00 (Sw. 14 & 15); Receiver: 515-0174-00 (Sw. 14 & 15); Transceiver: 500-6775-00 (Qty. 2/per) (Sw. 20, 21, 32, 34, 35, 37, 47 & 48 see Pages* ***148-151*** *for more details)*
Sw. 56 Part Note: *The Switch is comprised of a Hanger Bracket (535-5319-00) and Contact Wire (535-7563-01) located in the Cabinet.* ***Some Switch Diodes may be located under the playfield, in the Cabinet*** *or* ***Backbox*** *on Terminal Strips* ***or*** *Diode Boards and not on the assemblies.*
DOTS: **D**iode **O**n **T**erminal **S**trip, *see Sec.* ***5****, Chp.****2****,* ***Playfield Wiring****.*

Go To Coil Menu

To initiate, from the **DIAGNOSTICS MENU**, select the "COIL" *Icon* with either the **Red "LEFT"** or **Green "RIGHT" Buttons** and press the **Black "ENTER" Button**. The coils are listed in groups. Coils **01-16** are typically High Current Coils *(although Low Current Coils may be used in these positions & will be noted).* Coils **17-32** are typically Low Current Coils. Flash Lamps are typically used in positions **25-32** *(although may be used in any position & will be noted).*

```
COIN DOOR IS OPEN
PLAYFIELD HIGH POWER
DISABLED BY
COIN DOOR INTERLOCK
```

PULL OUT the Power Interlock Switch for operation with the Coin Door open.

Important: *The Partial Coils Detailed Chart Table is used as a reference against the Coil & Flash Lamp Locations on the next page. For the* ***complete*** *Coils Detailed Chart Table, see the reverse of the following page. The Chart is shown to compare against the Backbox I/O Power Driver Board Detailed Wiring Diagram (shown again in Sec.* ***5****, Chapter* ***1****,* ***Playfield Wiring****). For more on troubleshooting and diagnosing, see Sec.* ***5****, Chapter* ***4****,* ***Printed Circuit Boards****.*

Single Coil Test

To initiate, from the **COIL MENU**, select the "TEST" *Icon* with either the **Red** or **Green Buttons** and press the **Black Button**. Ensure the **Power Interlock Switch** is pulled out. Select either the "-" or "+" *Mini-Icons*. Start with the "+" *Mini-Icon* to start the manual **Single Coil Test** from #1 *(the test runs through all Coils and Flash Lamps #1-#32 & Optional UK Only Auxiliary Positions AUX 1-3).* Press the **Black Button** on the "+" *Mini-Icon*, as each coil is selected, the display will describe the Coil or Flash Lamp Name with the corresponding number, the wire with colors, the "Pin-Outs" from the I/O Power Driver Board, the Coil Voltage and Gauge-Turns *(e.g. 23-800).* Press the **Black Button** again to move forward in the test. To test and view a particular Coil or Flash Lamp, select the "RUN" *Mini-Icon* and press the **Black Button**. Each time the **Black Button** is pushed, the Coil or Flash Lamp will fire on the Playfield and/or Backbox, with the display indicating the Coil or Flash Lamp information. Continue with the same procedure to run through the entire test.

Cycling Coil Test

To initiate, from the **COIL MENU**, select the "CYC" *Icon* with either the **Red** or **Green Buttons** and press the **Black Button**. If still in a previous test, select the "PREV" *Mini-Icon* to return to **COIL MENU** or select either of the "<<" or ">>" *Mini-Icons* to move to **Cycling Coil Test** *(selecting again will return to* ***Coil Test****).* The test pulses each regular Coil or Flash Lamp sequentially *(cycling)* on the Playfield and in the Backbox *(if Coils are used).* The display indicates **CYCLING COILS**.

↻ **Coil Note:** ↻ Either -00**B** *or* -00**T** can be used for coil replacements. *B/T listed is preferable for easier diode access & may differ on game.*

PARTIAL COILS DETAILED CHART ...

High Current Coils Group 1		Drive Transistor	Coil GA-Turn or Bulb Type
#1	TROUGH UP-KICKER	Q1	26-1200 ↻ 090-5044-00T
#2	AUTO LAUNCH	Q2	24-940 ↻ 090-5036-00B
#3	TRUCK RAMP KICKER	Q3	23-800 ↻ 090-5001-00B
#4	TRUCK MOTOR DRIVE (20V)	Q4	Motor 20v 041-5093-00
#5	GARAGE RELEASE	Q5	23-800 ↻ 090-5001-00T
#6	GARAGE KICKER	Q6	23-800 ↻ 090-5001-00T
#7	TRACK EXIT POPPER	Q7	23-800 ↻ 090-5001-00T
#8	MIDWAY EJECT	Q8	26-1200 ↻ 090-5044-00T

High Current Coils Group 2		Drive Transistor	Coil GA-Turn or Bulb Type
#9	LEFT BUMPER	Q9	26-1200 ↻ 090-5044-00T
#10	RIGHT BUMPER	Q10	26-1200 ↻ 090-5044-00T
#11	BOTTOM BUMPER (DOT8)	Q11	26-1200 ↻ 090-5044-NL
#12	3 BANK (DROP TARGET) RESET	Q12	25-1240 ↻ 090-5034-00B
#13	RIGHT RAMP DIVERTER	Q13	32-1800 ↻ 090-5031-00
#14	GARAGE RAISE	Q14	22-1080 ↻ 090-5032-00T
#15	LEFT FLIPPER (50v RED/YEL)	Q15	23-1100 ↻ 090-5030-00T
#16	RIGHT FLIPPER (50v RED/YEL)	Q16	23-1100 ↻ 090-5030-00T

Low Current Coils Group 1		Drive Transistor	Coil GA-Turn or Bulb Type
#17	LEFT SLINGSHOT	Q17	23-800 ↻ 090-5001-00T
#18	RIGHT SLINGSHOT	Q18	23-800 ↻ 090-5001-00T
#19	FLASH: UPR RIGHT (BACK PANEL)	Q19	#89 Bulb 165-5000-89
#20	UPR ACCELERATOR MAG (AUX)	Q20	22-700 ↻ 090-5071-00
#21	RIGHT TRACK EXIT DIVERTER	Q21	26-1200 ↻ 090-5044-00T
#22	LEFT TRACK EXIT DIVERTER	Q22	26-1200 ↻ 090-5044-00T
#23	INNER ORBIT POST	Q23	26-1200 ↻ 090-5044-00T
#24	OPTIONAL COIL	Q24	Opt. 5v

Diode **O**n **T**erminal **S**trip (if noted)

Low Current Coils Group 2		Drive Transistor	Coil GA-Turn or Bulb Type
#25	LWR ACCLRTR MAG LT (AUX)	Q25	22-700 ↻ 090-5071-00
#26	LWR ACCLRTR MAG RT (AUX)	Q26	22-700 ↻ 090-5071-00
#27	PIT LOCK RELEASE LEFT	Q27	26-1200 ↻ 090-5044-00T
#28	PIT LOCK RELEASE RIGHT	Q28	26-1200 ↻ 090-5044-00T
#29	MIDWAY SIGN (HOT DOG)	Q29	32-1800 ↻ 090-5031-00
#30	FLASH: LEFT X3	Q30	#89 Bulb 165-5000-89
#31	FLASH: RIGHT X3	Q31	#89 Bulb 165-5000-89
#32	FLASH: TEST CAR X2	Q32	#89 Bulb 165-5000-89

Auxiliary (UK ONLY)	Drive Transistor	Coil GA-Turn
AUX 1: LEFT UP/DOWN POST	Q1	26-1200 ↻ 090-5044-00T
AUX 2: CENTER UP/DOWN POST	Q2	23-1100 ↻ 090-5030-00T
AUX 3: RIGHT UP/DOWN POST	Q3	26-1200 ↻ 090-5044-00T

COIL & FLASH LAMP LOCATIONS

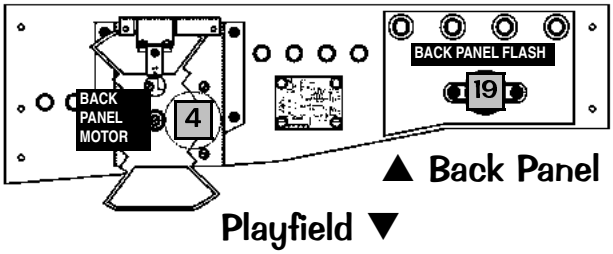

Playfield ▼

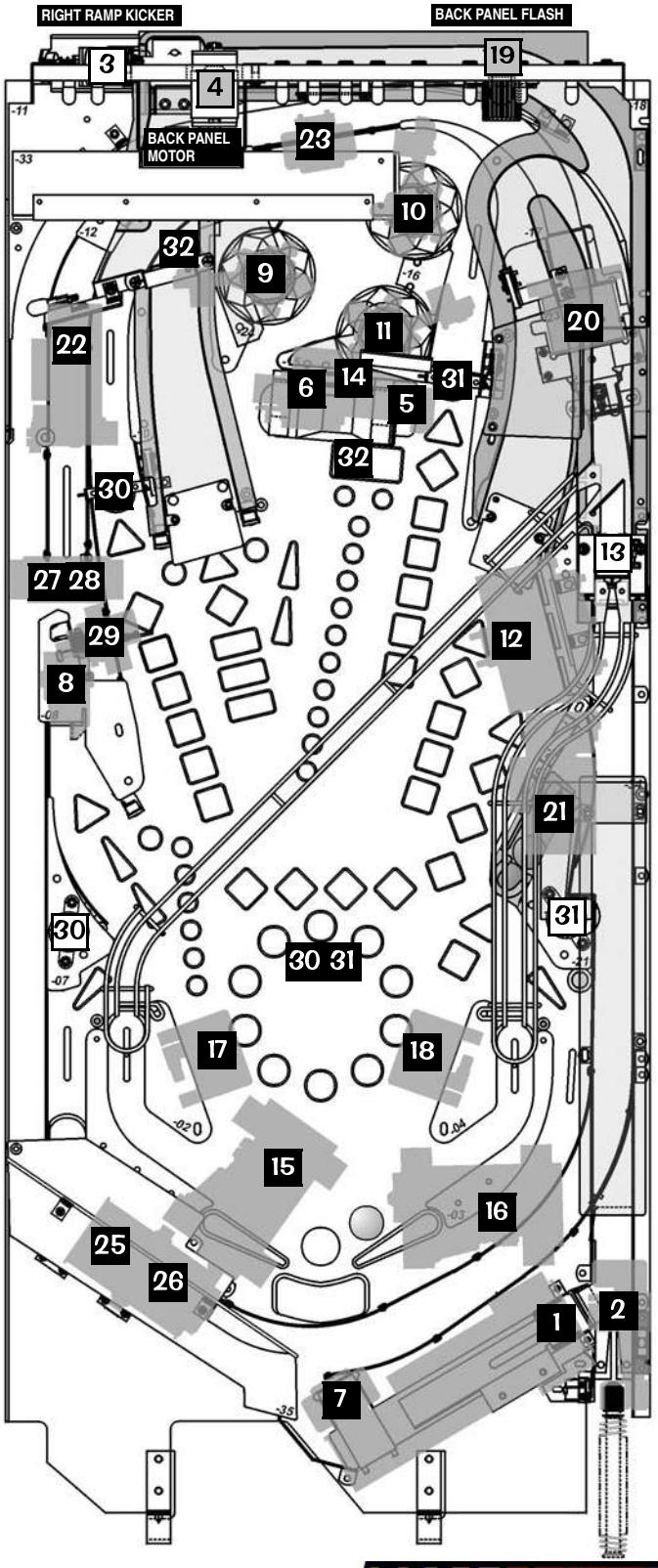

Typical Coil Schematic & Wiring

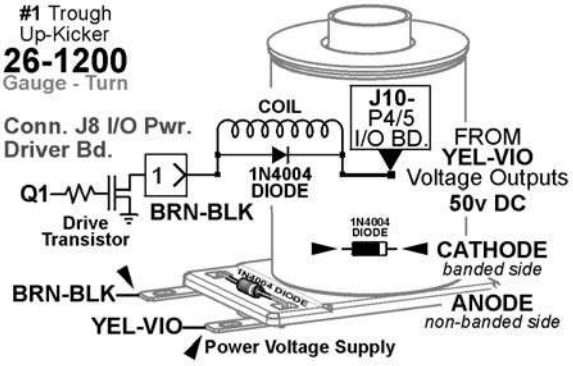

Bulb Types used for Flash Lamps

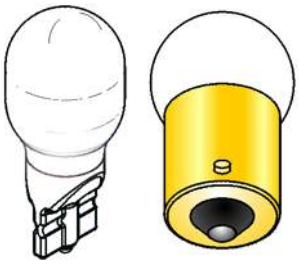

#906 Bulb
(Wedge Base)
165-5004-00

#89 Bulb
(Bayonet)
165-5000-89-HF

= Coils / Flash Lamps above Playfield.

= Coils / Flash Lamps below Playfield.

= Coils / Flash Lamps not on Playfield.

Color = Color of Mini-Mars of Flash Lamp Bulb.

Some Coil or Flash Lamp Diodes may be located under the playfield, in the Cabinet or Backbox *on Terminal Strips* ***or*** *Diode Boards and not on the assemblies.*
DOTS: **D**iode **O**n **T**erminal **S**trip *See Section **5**, Chapter **2**, **Playfield Wiring**.*

Coil Q24 is Optional. *If either a Coin Meter, Token Dispenser or Knocker (all optional equipment) is required, call Technical Support for more information, 1-800-542-5377 or 1-708-345-7700.*

COIL MENU: SINGLE COIL & CYCLING COIL

COILS DETAILED CHART TABLE

	High Current Coils Group 1	Drive Transistor	Driver Ouput Board	Power Line Color	Power Line Connection	Power Voltage	Drive Transistor Control Line Color	D.T. Control Line Connect	Coil GA-Turn or Bulb Type
#1	TROUGH UP-KICKER	Q1	▲ I/O Power Driver ▼	YEL-VIO	J10-P4/5	50v DC	BRN-BLK	J8-P1	26-1200 ↻ 090-5044-00T
#2	AUTO LAUNCH	Q2		YEL-VIO	J10-P4/5	50v DC	BRN-RED	J8-P3	24-940 ↻ 090-5036-00B
#3	TRUCK RAMP KICKER	Q3		YEL-VIO	J10-P4/5	50v DC	BRN-ORG	J8-P4	23-800 ↻ 090-5001-00B
#4	TRUCK MOTOR DRIVE (20V)	Q4		BROWN	J7-P1	20v DC	BRN-YEL	J8-P5	Motor 20v 041-5093-00
#5	GARAGE RELEASE	Q5		YEL-VIO	J10-P4/5	50v DC	BRN-GRN	J8-P6	23-800 ↻ 090-5001-00T
#6	GARAGE KICKER	Q6		YEL-VIO	J10-P4/5	50v DC	BRN-BLU	J8-P7	23-800 ↻ 090-5001-00T
#7	TRACK EXIT POPPER	Q7		YEL-VIO	J10-P4/5	50v DC	BRN-VIO	J8-P8	23-800 ↻ 090-5001-00T
#8	MIDWAY EJECT	Q8		YEL-VIO	J10-P4/5	50v DC	BRN-GRY	J8-P9	26-1200 ↻ 090-5044-00T

	High Current Coils Group 2	Drive Transistor	Driver Ouput Board	Power Line Color	Power Line Connection	Power Voltage	Drive Transistor Control Line Color	D.T. Control Line Connect	Coil GA-Turn or Bulb Type
#9	LEFT BUMPER	Q9	▲ I/O Power Driver ▼	YEL-VIO	J10-P4/5	50v DC	BLU-BRN	J9-P1	26-1200 ↻ 090-5044-00T
#10	RIGHT BUMPER	Q10		YEL-VIO	J10-P4/5	50v DC	BLU-RED	J9-P2	26-1200 ↻ 090-5044-00T
#11	BOTTOM BUMPER DOTS	Q11		YEL-VIO	J10-P4/5	50v DC	BLU-ORG	J9-P4	26-1200 ↻ 090-5044-NL
#12	3 BANK (DROP TARGET) RESET	Q12		YEL-VIO	J10-P4/5	50v DC	BLU-YEL	J9-P5	25-1240 ↻ 090-5034-00B
#13	RIGHT RAMP DIVERTER	Q13		YEL-VIO	J10-P4/5	50v DC	BLU-GRN	J9-P6	32-1800 ↻ 090-5031-00
#14	GARAGE RAISE	Q14		YEL-VIO	J10-P4/5	50v DC	GRY-GRN~3A Fuse~BLU-BLK	J9-P7	22-1080 ↻ 090-5032-00T
#15	LEFT FLIPPER (50v RED/YEL)	Q15		GRY-YEL~3A Fuse~RED-YEL	J10-P1/2	50v DC	ORG-GRY	J9-P8	23-1100 ↻ 090-5030-00T
#16	RIGHT FLIPPER (50v RED/YEL)	Q16		BLU-YEL~3A Fuse~RED-YEL	J10-P1/2	50v DC	ORG-VIO	J9-P9	23-1100 ↻ 090-5030-00T

	Low Current Coils Group 1	Drive Transistor	Driver Ouput Board	Power Line Color	Power Line Connection	Power Voltage	Drive Transistor Control Line Color	D.T. Control Line Connect	Coil GA-Turn or Bulb Type
#17	LEFT SLINGSHOT	Q17	▲ I/O Power Driver ▼	BROWN	J7-P1	20v DC	VIO-BRN	J7-P2	23-800 ↻ 090-5001-00T
#18	RIGHT SLINGSHOT	Q18		BROWN	J7-P1	20v DC	VIO-RED	J7-P3	23-800 ↻ 090-5001-00T
#19	FLASH: UPR RIGHT (BACK PANEL)	Q19		ORANGE	J6-P10	20v DC	VIO-ORG	J7-P4	#89 Bulb 165-5000-89
#20	UPR ACCELERATOR MAG (AUX)	Q20		VIO-RED~Triple Aux~VIO-YEL	J2-P3~Triple Aux~J10-P3	50v DC	ORG~Triple Aux~VIO-YEL	J2-P7~Trp. Aux~J7-P6	22-700 ↻ 090-5071-00
#21	RIGHT TRACK EXIT DIVERTER	Q21		BROWN	J7-P1	20v DC	VIO-GRN	J7-P7	26-1200 ↻ 090-5044-00T
#22	LEFT TRACK EXIT DIVERTER	Q22		BROWN	J7-P1	20v DC	VIO-BLU	J7-P8	26-1200 ↻ 090-5044-00T
#23	INNER ORBIT POST	Q23		BROWN	J7-P1	20v DC	VIO-BLK	J7-P9	26-1200 ↻ 090-5044-00T
#24	OPTIONAL COIL	Q24		RED	J16-P7	5v DC	VIO-GRY	J7-P10	Opt. 5v

Diode **O**n **T**erminal **S**trip (if noted)

	Low Current Coils Group 2	Drive Transistor	Driver Ouput Board	Power Line Color	Power Line Connection	Power Voltage	Drive Transistor Control Line Color	D.T. Control Line Connect	Coil GA-Turn or Bulb Type
#25	LWR ACCLRTR MAG LT (AUX)	Q25	▲ I/O Power Driver ▼	VIO-RED~Triple Aux~VIO-YEL	J2-P1~Triple Aux~J10-P3	50v DC	ORG-BRN~Triple Aux~BLK-BRN	J2-P5~Triple Aux~J6-P1	22-700 ↻ 090-5071-00
#26	LWR ACCLRTR MAG RT (AUX)	Q26		VIO-RED~Triple Aux~VIO-YEL	J2-P2~Triple Aux~J10-P3	50v DC	ORG-RED~Triple Aux~BLK-RED	J2-P6~Triple Aux.~J6-P2	22-700 ↻ 090-5071-00
#27	PIT LOCK RELEASE LEFT	Q27		BROWN	J7-P1	20v DC	BLK-ORG	J6-P3	26-1200 ↻ 090-5044-00T
#28	PIT LOCK RELEASE RIGHT	Q28		BROWN	J7-P1	20v DC	BLK-YEL	J6-P4	26-1200 ↻ 090-5044-00T
#29	MIDWAY SIGN (HOT DOG)	Q29		BROWN	J7-P1	20v DC	BLK-GRN	J6-P5	32-1800 ↻ 090-5031-00
#30	FLASH: LEFT X3	Q30		ORANGE	J6-P10	20v DC	BLK-BLU	J6-P6	#89 Bulb 165-5000-89
#31	FLASH: RIGHT X3	Q31		ORANGE	J6-P10	20v DC	BLK-VIO	J6-P7	#89 Bulb 165-5000-89
#32	FLASH: TEST CAR X2	Q32		ORANGE	J6-P10	20v DC	BLK-GRY	J6-P8	#89 Bulb 165-5000-89

Note: In Test Flash Lamps Menu ("Flash" Icon), Flashers tested are all Flash Lamps located between Q1-Q32 (This Game: Q19, Q30-Q32)

	Auxiliary (UK ONLY)	Drive Transistor	Driver Ouput Board	Power Line Color	Power Line Connection	Power Voltage	Drive Transistor Control Line Color	D.T. Control Line Connect	Coil GA-Turn
	AUX 1: LEFT UP/DOWN POST	Q1	UK 3X Trans. Driver Board	BROWN	J7-P1	20v DC	WHITE	J2-P3	26-1200 ↻ 090-5044-00T
	AUX 2: CENTER UP/DOWN POST	Q2		BROWN	J7-P1	20v DC	RED	J2-P4	23-1100 ↻ 090-5030-00T
	AUX 3: RIGHT UP/DOWN POST	Q3		BROWN	J7-P1	20v DC	ORANGE	J2-P7	26-1200 ↻ 090-5044-00T

↻ **Coil Note:** ↻ Either -00**B** *or* -00**T** can be used for coil replacements. *B/T listed is preferable for easier diode access & may differ on game.*

Backbox I/O Power Driver Board Detailed Wiring Diagram

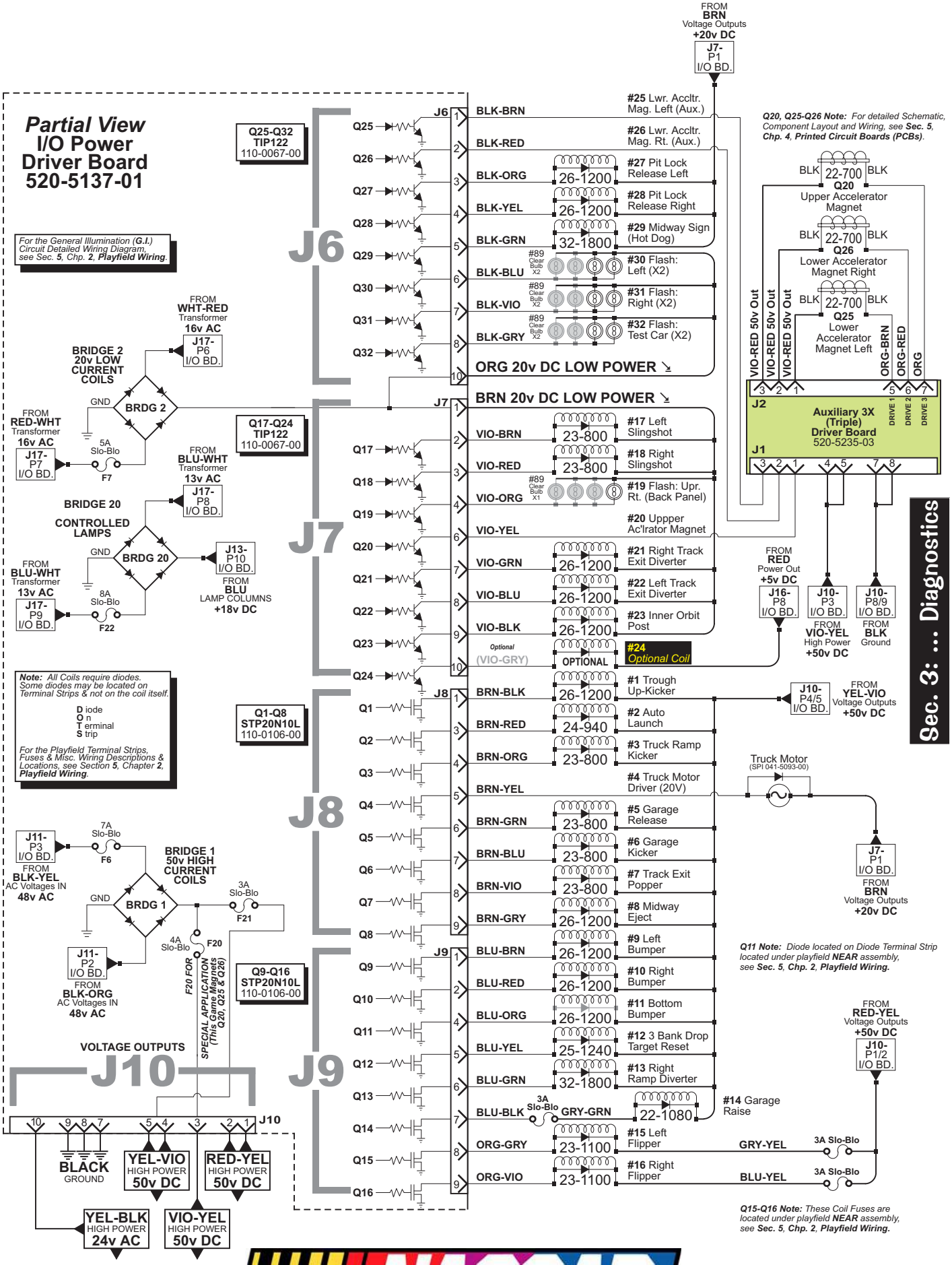

Go To Lamp Menu

To initiate, from the **DIAGNOSTICS MENU**, select the "LAMP" *Icon* with either the **Red "LEFT"** or **Green "RIGHT" Buttons** and press the **Black "ENTER" Button**. Controlled lamps are configured in and 8 x 10 Matrix of Columns (Lamp Drives) and Rows (Lamp Returns) with up to **80** lamps possible. The Lamp Test Menu consists of four (4) parts: **Single Lamp Test**, **Test All Lamps**, **Row Lamp Test** & **Column Lamp Test**.

Single Lamp Test

To initiate, from the **LAMP MENU**, select the "ONE" *Icon* with either the **Red** or **Green Buttons** and press the **Black Button**. Select either the "-" or "+" *Mini-Icons*. Start with the "+" *Mini-Icon* to start the manual **Single Lamp Test** from Column 1, Row 1, Lamp 1. Press the **Black Button** on the "+" *Mini-Icon*, as each lamp is selected, the lamp will light at it's location on the playfield as well as the display, indicating the Lamp Matrix Grid Position *(below)*, lamp name with the corresponding number, Return (Row) Wire & Color, Drive (Column) Wire & Color, and associated drive transistors. Press the **Black Button** again to move forward in the test. To test and view a particular lamp, select the "RUN" *Mini-Icon* and press the **Black Button**. Each time the **Black Button** is pushed, the lamp will light-up on the playfield, with the display indicating the lamp information. *Continue with the same procedure to run through the entire test.* ***TIP FOR THIS GAME ONLY:*** *TO VIEW SINGLE LAMPS 1 AT A TIME AROUND THE PLAYFIELD IN LOGICAL GROUPS, HOLD THE LEFT FLIPPER BAT UP (NOT THE BUTTON, BUT THE BAT ITSELF) BEFORE SELECTING THE "ONE" ICON. ONCE SELECTED, YOU CAN LET GO OF THE FLIPPER BAT AND PROCEDE TO SELECT THE "+" MINI-ICON WITH THE BLACK BUTTON.*

Test All Lamps

To initiate, from the **LAMP MENU**, select the "ALL" *Icon* with either the **Red** or **Green Buttons** and press the **Black Button**. If still in **Single Lamp Test** *(or any 1 of the 4 tests),* select the "PREV" *Mini-Icon* to return to **LAMP MENU** or select either of the "<<" or ">>" *Mini-Icons* to move through the tests, keep activating until **Test All Lamps** is displayed. The display will indicate **ALL LAMPS ON** and the lamps on the playfield will be lit, alternating between the rows in the Lamp Matrix Grid.

Row & Column Lamp Tests

To initiate, from the **LAMP MENU**, select the "ROW" or "COL" *Icon* with either the **Red** or **Green Buttons** and press the **Black Button**. If still in a previous test, select the "PREV" *Mini-Icon* to return to **LAMP MENU** or select either of the "<<" or ">>" *Mini-Icons* to move through the tests, keep activating until **Row** or **Column Lamp Test** *(whichever desired)* is displayed. In this test, each set of lamps in each Row or Column of the Lamp Matrix Grid *(respective to each test)* will light-up on the playfield and is indicated in the display.

LAMP MATRIX GRID*

Column (18v) / Row (Ground)	1: U17 YEL-BRN J13-P9	2: U16 YEL-RED J13-P8	3: U15 YEL-ORG J13-P7	4: U14 YEL-BLK J13-P6	5: U13 YEL-GRN J13-P5	6: U12 YEL-BLU J13-P4	7: U11 YEL-VIO J13-P3	8: U10 YEL-GRY J13-P1
1: Q33 RED-BRN J12-P1	1 #44 Clear Bulb RACE POSITION 10	2 #555 Clear Bulb VICTORY LAP	3 #555 Clear Bulb HAPPY HOUR*	4 #555 Clear Bulb 100K	5 #555 Clear Bulb STANDUP LEFT	6 #555 Clear Bulb (R) ACE	7 #555 White LED LEFT POP (8 bts)	8 #555 Clear Bulb SPECIAL & MILLIONS
2: Q34 RED-BLK J12-P2	9 #555 Clear Bulb RACE POSITION 9	10 #555 Clear Bulb ROAD COURSE*	11 #555 Clear Bulb INFIELD PARTY	12 #555 Clear Bulb 150K	13 #555 Clear Bulb 100K	14 #555 Clear Bulb R (A) CE	15 #555 White LED RIGHT POP (8 bts)	16 #555 Clear Bulb GARAGE
3: Q35 RED-ORG J12-P3	17 #44 Clear Bulb RACE POSITION 8	18 #555 Clear Bulb 2X HAULER MILES	19 #555 Clear Bulb SHORT TRACK*	20 #555 Clear Bulb 200K	21 #555 Clear Bulb 150K	22 #555 Clear Bulb RA (C) E	23 #555 White LED BOTTOM POP (8 bts)	24 #555 Clear Bulb FUEL
4: Q36 RED-YEL J12-P4	25 #555 Clear Bulb RACE POSITION 7	26 #555 Clear Bulb COLLECT R-A-C-E	27 #44 Clear Bulb TEST CAR	28 #555 Clear Bulb 250K	29 #555 Clear Bulb 200K	30 #555 Clear Bulb RAC (E)	31 #44 Clear Bulb (C) HAMP #1	32 #44 Yellow Bulb PIT ROAD SIGN
5: Q37 RED-GRN J12-P5	33 #44 Clear Bulb RACE POSITION 6	34 #555 Clear Bulb JACK POT	35 #555 Clear Bulb HAULER RIDE	36 #555 Clear Bulb HARD RACING	37 #555 Clear Bulb 250K	38 #555 Clear Bulb SPIN	39 #44 Clear Bulb C (H) AMP #1	40 #44 Clear Bulb MOVE UP
6: Q38 RED-BLU J12-P6	41 #555 Clear Bulb RACE POSITION 5	42 #555 Clear Bulb BONUS JACKPOT	43 #555 Clear Bulb LIGHT EXTRA BALL	44 #555 Clear Bulb COLLECT R-A-C-E	45 #555 Clear Bulb SPEED SHOTS	46 #555 Clear Bulb JACK POT	47 #44 Clear Bulb CH (A) MP #1	48 #555 Clear Bulb CHAMP #1
7: Q39 RED-VIO J12-P8	49 #44 Clear Bulb RACE POSITION 4	50 #555 Clear Bulb MULTI BALL	51 #44 Clear Bulb BUMP 'N RUN*	52 #555 Clear Bulb JACK POT	53 #555 Clear Bulb COLLECT R-A-C-E	54 #555 Clear Bulb EXTRA BALL	55 #44 Clear Bulb CHA (M) P #1	56 #555 Clear Bulb SCANNER
8: Q40 RED-GRY J12-P9	57 #555 Clear Bulb RACE POSITION 3	58 #555 Clear Bulb LOCK	59 #555 Clear Bulb RIGHT SIDES ONLY*	60 #44 Clear (X2) SPINNERS X2 (@ MAX)	61 #555 Clear Bulb JACK POT	62 #555 Clear Bulb MODE BONUS	63 #44 Clear Bulb CHAM (P) #1	64 #555 Clear Bulb JACK POT
9: Q41 RED-WHT J12-P10	65 #44 Clear Bulb RACE POSITION 2	66 #555 Clear Bulb COLLECT R-A-C-E	67 #555 Clear Bulb SUPER FAN	68 #555 Clear Bulb 2 TO GO	69 #555 Clear Bulb LEFT RAMP STANDUP (LEFT)	70 #555 Clear Bulb COLLECT R-A-C-E	71 #44 Clear Bulb CHAMP (#1)	72 #555 Clear Bulb SHOOT AGAIN
10: Q42 RED J12-P11	73 #555 Clear Bulb RACE POSITION 1	74 #555 Clear Bulb JACK POT	75 #555 Clear Bulb GAS 'N GO*	76 #555 Clear Bulb 1 TO GO	77 #555 Clear Bulb LEFT RAMP STANDUP (RT)	78 #555 Clear Bulb SUPER JACK POT	79 *OPTIONAL* *TOURNAMENT BUTTON*	80 #555 Clear Bulb START BUTTON

Lamps 3, 10, 19, 51, 59 & 75 differ on "G-P" Playfield *(all other lamps are the same)*

LAMP MATRIX GRID LOCATIONS

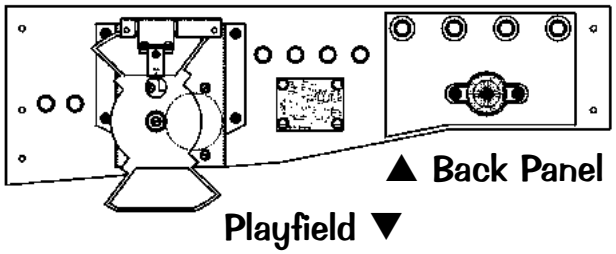

▲ Back Panel

LAMPS ON BACK PANEL ARE G.I. ONLY.
NO CONTROL LAMPS THIS GAME.

Playfield ▼

Lamps 3, 10, 19, 51, 59 & 75 differ on "G-P" Playfield
(all other lamps are the same)

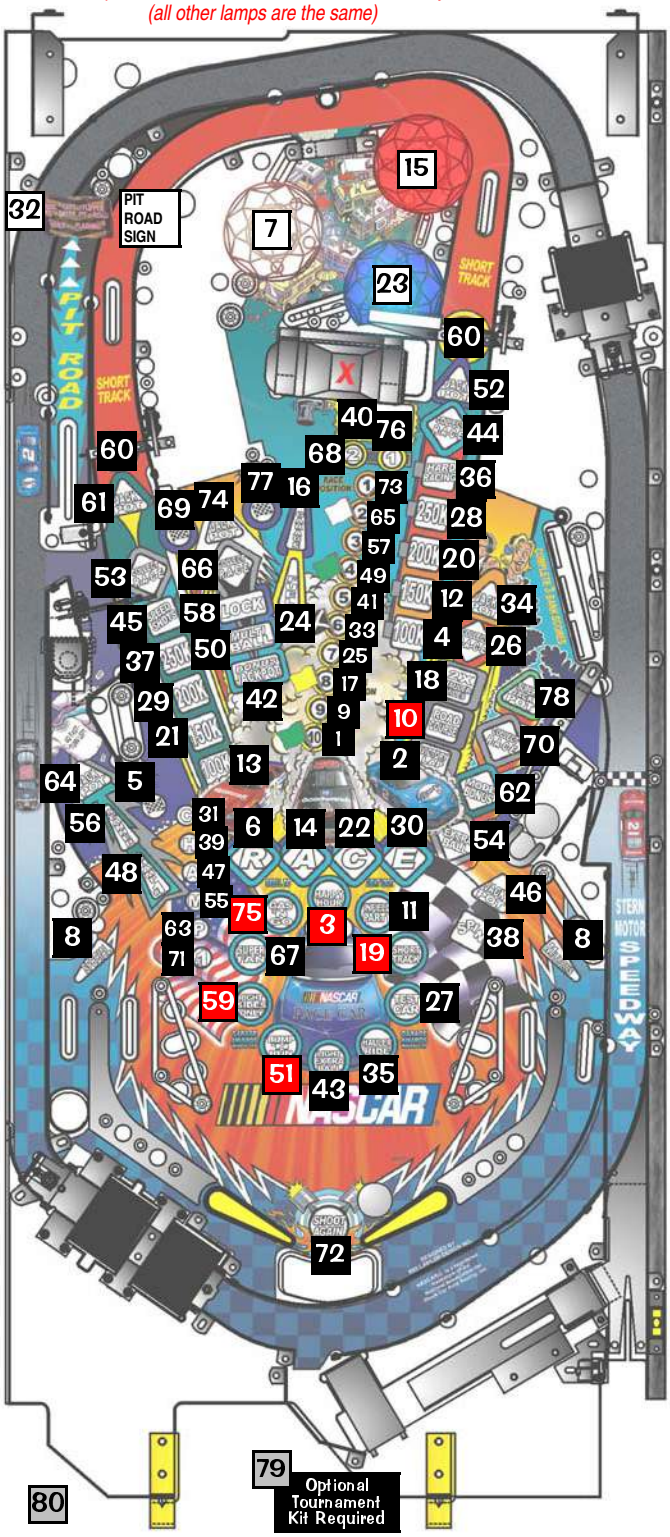

Typical Lamp Schematic & Wiring

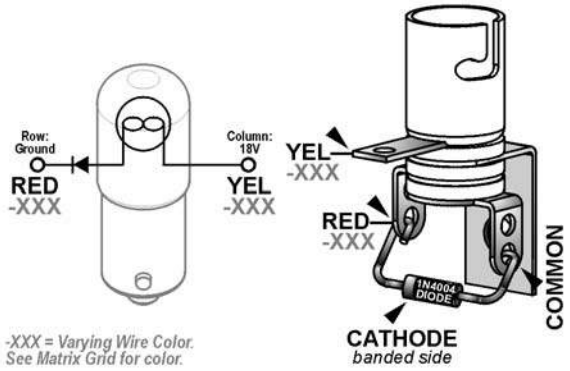

Bulb Types used for Control Lamps

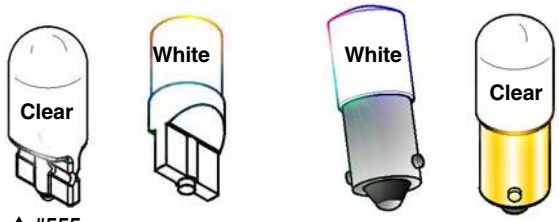

▲ #555 Bulb (Wedge) 165-5002-00	▲ #555 LED (Wedge) 112-5024-08	▲ #44 LED (Bayonet) 112-5023-08	▲ #44 Bulb (Bayonet) 165-5004-00-HF

= Lamps which differ on "G-P" Playfield
(all other lamps are the same)
= Lamps above Playfield.
= Lamps below Playfield.
= Lamps not on Playfield.

Lamp Part Notes: *#555 Wedge Base (W.B.) Bulb Clear = 165-5002-00. #44 Bulb (Hvy. Fil.) Clear = 165-5000-44-HF. #555 LED W.B. White = 112-5024-08 See Section **4**, Chapter **1**, **Parts Identification & Location**, Pages **72-74** for more details on bulbs and corresponding sockets.*
***Some Lamp Diodes may be located under the playfield, in the Cabinet or Backbox** on Terminal Strips and not on or with the Lamp Socket.*
DOTS: **D**iode **O**n **T**erminal **S**trip, *see Sec. **5**, Chapter **2**, **Playfield Wiring**.*

Test Flash Lamps

PULL OUT the Power Interlock Switch for operation with the Coin Door open.

To initiate, from the **DIAGNOSTICS MENU**, select the "FLASH" *Icon* with either the **Red "LEFT"** or **Green "RIGHT" Buttons** and press the **Black "ENTER" Button**. After selecting this *Icon* the display will indicate **CYCLING FLASHERS**. The Flash Lamps will cycle continuously until the test is exited. This test allows the technician to easily spot any burned-out bulbs and replace them. Flashers tested are Flash Lamps in Positions: **Q1-Q32** and in this game Flash Lamp(s) are : **Q19 & Q30-Q32.**

Clear Ball Trough

PULL OUT the Power Interlock Switch for operation with the Coin Door open.

To initiate, from the **DIAGNOSTICS MENU**, select the "CLR" *Icon* with either the **Red "LEFT"** or **Green "RIGHT" Buttons** and press the **Black "ENTER" Button**. This Menu is provided to allow the technician a simple method of removing the balls from the trough and also, to test functionality of the trough, ensuring proper trough operation. After selecting this *Icon* the display will show a graphic of the ball trough with balls in the trough with it's corresponding switch number. Select the "RUN" *Mini-Icon* to eject the ball in the first position. Simultaneously, the display and the playfield will eject the ball to the Trough Up-Kicker, eject from the Trough Up-Kicker into the Shooter Lane and will be ejected onto the playfield where the technician can easily retrieve the pinball or allow the ball(s) to re-enter the trough to continue **Clear Ball Trough Test**. ⚠ ***CAUTION:*** *Continuous use of above test may overheat the Trough Up-Kicker Coil.* ⚠

Technician Alerts

To initiate, from the **DIAGNOSTICS MENU**, select the "TECH" *Icon* with either the **Red "LEFT"** or **Green "RIGHT" Buttons** and press the **Black "ENTER" Button**. This Menu is provided to show any switch probl
ems and/or missing pinballs.

After selecting this *Icon*, and if any of the below criteria is met, the display will indicate *any or all* of the following categories: **POSSIBLY BROKEN SWITCH**, **CHECK SWITCHES** and/or **HYPERSENSITIVE SWITCH** *(Sw. #16, Shooter Lane, is used as an example).* If more than one switch is reported, the Switch Number and Name will cycle within the category, and then will cycle the categories. To return to the **DIAGNOSTICS MENU**, select the "PREV" *Mini-Icon* and press the **Black "ENTER" Button**.

Switch Detection

During game play, activation of switches are monitored. In programming, every switch is given a minimum & maximum value based on the game. The switches are monitored every 5 minutes of game play with a "sliding window" of 15 minutes. If a switch is determined to be faulty, game play is compensated.

- Switches noted as **POSSIBLY BROKEN SWITCH** should be checked then adjusted or replaced. ***Important:*** *A switch reported as "possibly broken" may actually be an unused switch due to* ***lack of usage*** *and* ***not because they're broken.*** *This can happen, if a switch is located in a "hard" shot position, and the players are not making the shot. Game programming will still compensate for this unplayed switch.*

- Switches noted as **CHECK SWITCHES** are determined to be stuck closed or open depending on switch usage. Free up the switch actuator adjust or replace if necessary.

- Switches noted as **HYPERSENSTIVE SWITCH** means just that, the switch should be readjusted or replaced, *if necessary.*

Determination of switch usage can be checked in **Audits** *(review Section **3**, Chapter **3**, **GO TO AUDITS MENU**).* Find the associated Audit with the switch in question and check usage; compare it to commonly used switches for comparison. After any switch is checked and repaired or replaced, it's suggested to test the switch in the **PLAY TEST MENU** *(see the **next page**)* or **Single Coil Test** *(reviewed earlier in this chapter, **Page 18**)* where the associated coil to the switch can be tested as well. After correcting the problem, the switch will still be reported until the game is played and the switch is again monitored as specified above. *Only you can determine if a switch getting reported is bad or if the switch is currently not getting actuated during game play.*

Technicians Alerts continued on the next page.

Pinball Detection

PLAYFIELD STATUS
PINBALL MISSING
PREV QUIT

While in **Technician Alerts** Menu, if the following is displayed, the game has detected one (1) or more pinball(s) missing and has compensated for the lost pinball(s) to provide normal game play.

Important: *Determine where the pinball is!* ***Do not add pinball(s)*** *until it is determined the pinball(s) are indeed missing & not just stuck. If pinball(s) are added, & if the original stuck pinball has freed itself, the pinball game will not operate properly with the extra pinball(s). When the pinball is recovered, the above display* ***will not*** *appear the next time* ***Technician Alerts*** *is visited (a game must be played for the pinball to be determined as found).*

During game play, a ball can get trapped or stuck. If after approximately 15 seconds of inactivity or "no scoring," **Ball Search** is started. ***Note:*** *If the pinball is in the Plunger Lane or "held" on the flipper, no* ***Ball Search*** *will be performed.* The game will perform one **Ball Search** in an attempt to "find" or free-up the pinball.

LOOKING FOR
PINBALLS
PLEASE WAIT
20

If the game does not see a switch closure *(indicating the pinball has not been found),* this display will appear with a count-down timer of 20 seconds, during which **Ball Search** will continue until the timer runs out *(this feature will not happen if the game is in Competition Mode; Ball Search will continue until the pinball is found, unstuck and/or replaced manually).* The display will momentarily acknowledge the missing pinball(s). The game will provide another pinball into play and will compensate for the lost pinball. Game play will appear normal.

Note: *This detection and compensation will happen with every pinball, if each suffers the same fate of a ball trap. If* ***all*** *balls get trapped, the game cannot be played or started until the situation is rectified.*

Tech Report Alert Option

This game has the capability of ***automatically alerting*** the operator upon **Power-Up** and/or opening the **Coin Door** if any switch problems and/or missing pinballs has occurred. *Review Section* ***3****, Chapter* ***4****,* ***GO TO ADJUSTMENTS MENU****, Standard Adjustments.* The Standard Adjustment to change is **49**. The default for this feature is **NEVER**. The options are: **POWERUP**, **COIN DOOR** or **POWERUP AND COIN DOOR**.

PLEASE CHECK
TECH REPORT
PORTALS->DIAG->TECH

Upon **Power-Up** *(Game Reset)* and/or opening the **Coin Door** *(depending on the option selected)*, this ***display*** will flash three (3) times along with an audible sound. To find out the problem, enter this **Technicians Alert Menu** and wait for the displays.

OPERATOR ALERT!
#2 AUTO LAUNCH
COIL MALFUNCTION

Note: Coils ***are not reported*** in **Technician Alerts**, ***h o w e v e r****, if a faulty switch is the culprit, the switch will then be reported.* The below ***display*** is shown momentarily during **Game Mode** or **Power-Up** to alert the operator of a coil malfunction *(coil doesn't energize or coil fires a multiple number of times).* **" OPERATOR ALERT! "** works by monitoring any *switch activated coil* that has the potential to trap a ball when disabled *(e.g. in the Auto Launch, Scoop, Eject, etc.).* This alert can also appear if a switch associated with a coil *(example shown is #2 Auto Launch)* is stuck closed *(caused by a switch jam or stuck ball)*; the **CPU/Sound Board** will *activate* the coil approximately ten times and if the switch remains closed, the game will report this switch in **Technician Alerts** as **CHECK SWITCHES**. *The display alert* ***" PLEASE CHECK TECH REPORT "*** *will be shown (****o n l y i f*** *POWERUP, COIN DOOR or POWERUP AND COIN DOOR is selected in Standard Adjustment* ***49****).*

Begin Play Test

To initiate, from the **DIAGNOSTICS MENU**, select the "PLAY" *Icon* with either the **Red "LEFT"** or **Green "RIGHT" Buttons** and press the **Black "ENTER" Button**. After selecting this *Icon* the technician can test certain play functions to insure all switch activated coils function without entering game play. *For example, by rolling the ball over the Shooter Lane Sw., the Autoplunger should fire. If it kicks to early or too late, the switch actuator should be adjusted to compensate for this error. If it fails to fire, use the* ***Switch Test*** *or* ***Coil Test*** *to help determine the cause of the failure. During this Play Test, check all coil assemblies with related switches in the game. For unique Game Test(s), select the* ***"NASC"*** *Icon in the* ***DIAGNOSTICS MENU****, reviewed on Pages* ***27-28****.*

COIN DOOR IS OPEN
PLAYFIELD HIGH POWER
DISABLED BY
COIN DOOR INTERLOCK

PULL OUT the Power Interlock Switch for operation with the Coin Door open.

Fire Knocker

To initiate, from the **DIAGNOSTICS MENU**, select the "KNOCKER" *Icon* with either the **Red "LEFT"** or **Green "RIGHT" Buttons** and press the **Black "ENTER" Button**. The digitally mastered "Knocker" is sounded.

Sound / Speaker Test

To initiate, from the **DIAGNOSTICS MENU**, select the "SPKR" *Icon* with either the **Red "LEFT"** or **Green "RIGHT" Buttons** and press the **Black "ENTER" Button**. The BSMT 2000 Sound System produces true digital stereo sound from Backbox & Cabinet Speakers or *"Mono"* on the Cabinet Speaker (when used by itself). After selecting this *Icon*, select the "-" or "+" *Mini-Icons* and press the **Black "ENTER" Button** to *activate* the first test. Repeat to visually see & hear all tests. Select the "RUN" *Mini-Icon* to *activate* the test chosen without moving to the next test.

> ***Note:*** *During Sound Tests, the display shows the speaker identification and the corresponding sound(s). The sound functions allow verification that both channels are functioning properly & that the speaker connections are correct.*

Speaker Phase Testing

Connections to each of speakers are polarized and each must be connected appropriately for the best quality sound. If one speaker has the positive and negative connections reversed with respect to the other one, bass frequencies will not be produced properly and the overall sound quality will be poor. To test for proper speaker phasing, use the sound test to cycle through the Backbox & Cabinet, and Backbox Sine (repeated) functions. If the Cabinet Sine produces more volume and bass than the Left Sine, the speakers are connected properly. If it produces the same or less, one speaker is connected improperly. To isolate and correct reversed speaker connections, one of two methods may be used.

1. Check each speaker for polarity markings. If the speakers have polarity markings, verify that the Backbox Speaker **RED-WHT** Wire and the Cabinet Speaker **YEL-WHT** Wire is connected to the negative (-) terminal.

2. Disconnect the speaker output connector from the CPU / Sound Board and connect a 1.5-volt battery across each speaker pair one at a time while observing the speakers. Make sure the positive battery terminal is connected to the positive lead (CN4, Pin-3 (**RED-BLK**) or Pin-6 (**YEL-BLK**)) each time. As the connection is made, check speaker cone movement; proper connections are indicated by outward movement.

Auto / Manual Tests: Speaker, Sound / OPSYS EPROM (Loc. U7), Voice ROMs 1-4 (U17, U21, U36 & U37).
Sounds Produced: Tone, Level 1-3+ Music and/or Speech Pattern 1-3+.

> ***Note:*** *For ROM Usage (Summary Table) & Locations, see Page* DR. ❶ *in the* ***"Find-It-In-Front: Dr. Pinball Section"****. Voice ROMs (****U17****,* ***U21****,* ***U36*** *and/or* ***U37****) which are* ***8MB must have a Jumper at W6*** *on the* ***CPU/Sound Board*** *to function properly.*

Begin Burn In

To initiate, from the **DIAGNOSTICS MENU**, select the "BURN" *Icon* with either the **Red "LEFT"** or **Green "RIGHT" Buttons** and press the **Black "ENTER" Button**. After selecting this *Icon* the ***Begin Burn-In Test*** will start. At this stage the game will exercise all CPU I/O Functions (**Dot Matrix Display Test**, **Coil Testing**, **Lamp Testing**, **Sound...**, etc.). This is provided to constantly exercise sounds, coils, etc... Cumulative Burn-In minutes will be displayed. ***Note:*** *To reset Burn-In minutes to* ***00*** *see Section* ***3****, Chapter* ***6****,* ***GO TO RESET MENU****,* ***Factory Reset****.* ***Caution:*** *Performing a Factory Reset will reset all other information as well.*

Dot Matrix Test

To initiate, from the **DIAGNOSTICS MENU**, select the "DOT TEST" *Icon* with either the **Red "LEFT"** or **Green "RIGHT" Buttons** and press the **Black "ENTER" Button**. After selecting this *Icon* the **Dot Matrix Test** immediately begins. ***Note:*** *Pressing any button will exit the test & return to* ***DIAGNOSTICS MENU****.*

The display will immediately illuminate and cycle for ***1 pass of each test*** continuously for each of the following:

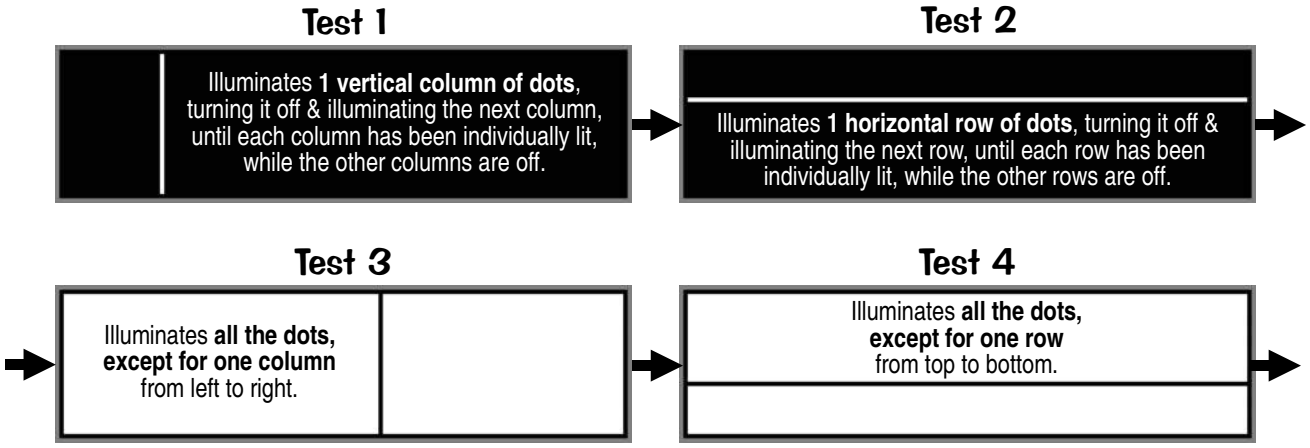

Dot Matrix Test continued on the next page.

Test 5

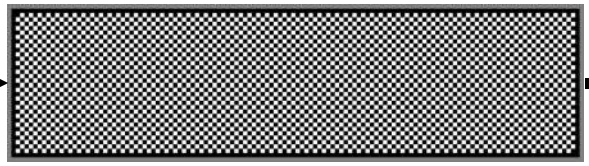

Illuminates **all the dots alternating even & odd**, in both the *rows and columns*.

Test 1

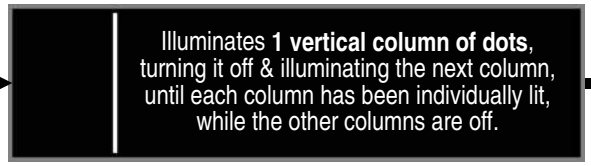

Note: Pressing the **Red**, **Green**, **Black** or **Flipper Buttons** will exit the test and return to **DIAGNOSTICS MENU**.

Dot Matrix Display Explained

The display utilizes a **Micro-Processor Control Board** mounted in piggyback fashion to the **Dot Matrix Display (128 X 32) Driver Board**. The purpose behind this board is to provide more information to the operator as well as displaying graphics to the player.

The board is controlled by a **6809E Microprocessor** and its personality ROM (Unique to the Game). It receives Data, Reset & Clock Information from the **CPU/Sound Board** via the ribbon cable and sends back multiple Status and Busy Signals to the **CPU**. This is to insure synchronized communication between the **CPU** and the **Display Controller Board**. The Drivers for the rows and columns are provided on 5 surface mounted integrated circuits on the **Dot Matrix Display Driver Board**.

NASCAR® DIAGNOSTICS

To initiate, from the **DIAGNOSTICS MENU**, select the "NASC" *Icon* with either the **Red "LEFT"** or **Green "RIGHT" Buttons** and press the **Black "ENTER" Button**.

PULL OUT the Power Interlock Switch for operation with the Coin Door open.

This will bring up the **NASCAR TEST MENU**, with the "TRAK" *Icon* flashing. This Sub-Menu is used to test the operation of the OPTOs on the Track ("TRAK" *Icon*), in the Semi-Truck [Spinning Windmill Target] ("SEMI" *Icon*) and the Switches on the Car [Up/Down Mechanism] ("CAR" Icon) . To initiate, from the **NASCAR DIAGNOSTICS MENU**, select one of the 3 *Icons* with either the **Red** or **Green Buttons** and press the **Black Button**.

After finishing the Test, select the "PREV" *Mini-Icon* to return to the Sub-Menu.

Track Diagnostics Test

Selecting the "TRAK" *Icon* will bring up the **TRACK TEST MENU**. Selecting the "+" *Mini-Icon* initiates the **RUNNING** and **OPTO TEST** MENUS. The OPTO Switches to be tested are in the following order *(ball runs on the track counter-clockwise only):* **48**, **47**, **37**, **35** & **34**. The Accelerator Magnet Coils are **Q20**, **Q25** and **Q26**, respectively. The track diagnostics consist of a track monitor and two separate tests. The track monitor displays the status of all five optical detectors (OPTOs) used with the track Accelerator Magnets. The three lower OPTOs are displayed on the left side of the screen and the two upper OPTOs are displayed on the right. During normal track operation, the pinball will be moving counterclockwise and the OPTOs will show their closure starting from the top down. The presence of a pinball is indicated by illuminating the small square icon for that particular OPTO for 1/4 second. The icon *does not* remain illuminated during the entire time an OPTO's light beam is broken, only the transition from opened to closed, however the Switch Test can be used to display the static condition of a track OPTO.

The display will indicate **PLUNGE BALL**. The first track test is the **RUNNING TEST** which places the track in its normal running configuration. Plunging a ball will cause the ball to make laps around the track as in normal play. The second track test is the **OPTO TEST**, this test will insure that all OPTOs are functioning properly and are wired in the correct order. *Before continuing, ensure the Power Interlock Switch for pulled out as stated above.*

RUNNING TEST: Plunge a ball onto the track. If the track is functioning properly, the ball should be able to make laps around the track while the SW. 37, SW. 35, SW. 34, SW. 48 and SW47 icons flash when a ball is seen at that particular OPTO.

Track Test continued on the next page.

PULL OUT the Power Interlock Switch for operation with the Coin Door open.

OPTO TEST: *(ensure the Power Interlock Switch for pulled out as stated right)* Plunge a ball onto the track. If all OPTOs are functioning and are wired in the correct order, the display will read "OPTOS WORKING PROPERLY." If an OPTO is nonfunctional or in the wrong order, the display will read "OPTO MISSING," or "WRONG ORDER," and will also display which OPTO is incorrect. The OPTOs are labeled in order: H0 (SW. 48), H1 (SW. 47), L0 (SW. 37), L1 (SW. 35) and L2 (SW. 34). As the ball leaves the Shooter Lane (groove), H0 is the first OPTO and H1 is the second OPTO for the Upper (High) 1-Coil Magnet Accelerator (Q20). L0 is the first OPTO, L1 is the second OPTO and L2 is the third OPTO for the Lower (Low) 2-Coil Magnet Accelerator (Q25 & Q26).

Note: *Because a miss-wired OPTO can cause the pinball to stall or not make a complete lap around the track, this test can be performed with the door open and the High Power disabled.* ***PUSH IN*** *the Power Interlock Switch and open the Coin Door for testing* ***without the accelerator magnets****. This will prevent the magnets from firing and possibly corrupting the ball's travel.*

Truck Diagnostics Test

Selecting the "SEMI" *Icon* will bring up the **TRUCK TEST MENU**. Selecting the "+" *Mini-Icon* initiates the **RUNNING**, **STOPPED**, **HIDE CAR** and **SHOW CAR** MENUS. The OPTO Switches to be tested are in the following order: **21** & **20**. The truck diagnostics consist of an OPTO status monitor and four individual tests. The two OPTOs monitored are the Left Ramp OPTO and the Semi-Truck (Hauler) OPTO (Motor on Backpanel). The Left Ramp OPTO is used to sense the presence of a ball on the Left Ramp, and the Semi OPTO is used to determine the position of the Spinning Car Target at the top of the Left Ramp. The OPTO status monitor will illuminate when an OPTO's beam is blocked and will remain illuminated as long as the OPTO is closed. *Before continuing, ensure the Power Interlock Switch for pulled out as stated above.*

RUNNING TEST: During the **RUNNING TEST** the motor will turn on and the Spinning Car Target will rotate. You should see the Truck OPTO in the status monitor turn on and off as the Spinning Car Target rotates.

STOPPED MODE: In the **STOPPED MODE**, the motor will turn off and Spinning Car Target will stop. The status monitor will reflect the current condition of the optos.

HIDE CAR TEST: In the **HIDE CAR TEST**, the motor will turn on if the car is visible and the Spinning Car Target will turn until the car is hidden from view. The status monitor will reflect the current condition of the OPTOs, and the Truck OPTO status should be extinguished when the car is hidden.

SHOW CAR TEST: In the **SHOW CAR TEST**, the motor will turn on if the car is hidden and the Spinning Car Target will turn until the car is in view. The status monitor will reflect the current condition of the OPTOs, and the Truck OPTO status should be illuminated when the car is showing.

Car Diagnostics Test

Selecting the "CAR" *Icon* will bring up the **CAR TEST MENU**. Selecting the "+" *Mini-Icon* initiates the **PLAY TEST**, **CAR DOWN** and **CAR UP** MENUS. The Switches to be tested are: **36 (STAND-UP TARGETS X2)**, **40 (TEST CAR)**, **39 (CAR DOWN)** and **52 (Vertical Up-Kicker)**. *Note: If the Power Interlock Switch was not pulled out, the display will indicate an error message(s) "Check ..." (e.g. CHECK SWITCH 39 or CHECK COIL Q9).* The car diagnostics consist of a switch status monitor and three individual tests. The switch's status icon will illuminate when a switch is closed and remain illuminated as long as the switch is closed. In the **PLAY TEST** the car will raise when it's struck, lower when the stand-up targets are struck and operate the Vertical Up-Kicker (VUK) when the ball enters the Garage (Up-Down) Scoop. If the car fails to move in the desired direction, the display will show an error message. The **PLAY TEST** must be performed with the High Power enabled or the error message will be displayed because the car is unable to move in the desired direction.

PLAY TEST or CAR UP: Important, if the High Power is not activated, you will receive an error message because the car was unable to move. PULL OUT the Power Interlock Switch for operation with the Coin Door Open, and restart the test if you receive the error message. Select either the "+" or "-" *Mini-Icon* to restart the **PLAY TEST**. The status monitor will reflect the current condition of the car switches. Dropping a ball in the Garage Scoop will cause the Vertical Up-Kicker to fire the ball out of the Garage Scoop.

CAR DOWN: The status monitor will reflect the current condition of the car switches.

Go To Fuse Table

To initiate, from the **DIAGNOSTICS MENU**, select the "FUSES" *Icon* with either the **Red "LEFT"** or **Green "RIGHT" Buttons** and press the **Black "ENTER" Button**. The **FUSE TABLE MENU** now appears. This provides the technician with the current **Fuse Table** for this game *(also noted on a decal in the Backbox)*.The fuses are located in the Backbox *(on the **Display Power Supply Board** and the **I/O Power Driver Board**)*, and also in the Cabinet *(under the playfield by the Flippers and/or by any unique assembly requiring an additional fuse, such as magnets)*. For the complete **Fuse List** in the *Quick Reference Fuse Chart & Pictorials*, *see the next page or Page* DR. ❶ *(front of this manual).*

Example:

After entering **Portals™**, the **MAIN MENU** now appears with the "DIAG" *Icon* (**GO TO DIAGNOSTICS MENU**) flashing:

Press the **Black "ENTER" Button** to *activate* this **ICON**. The **DIAGNOSTICS MENU** now appears with the "SW" *Icon* (**GO TO SWITCH MENU**) flashing; use the **Red "LEFT"** or **Green "RIGHT" Buttons**, until the "FUSES" *Icon* (**GO TO FUSE TABLE**) is flashing:

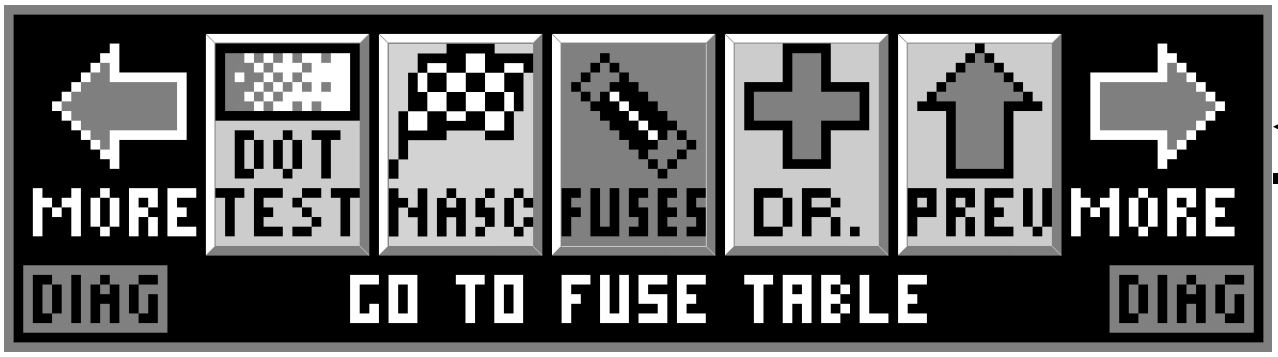

Press the **Black Button** to *activate* this **ICON**. The **FUSE TABLE** now appears.

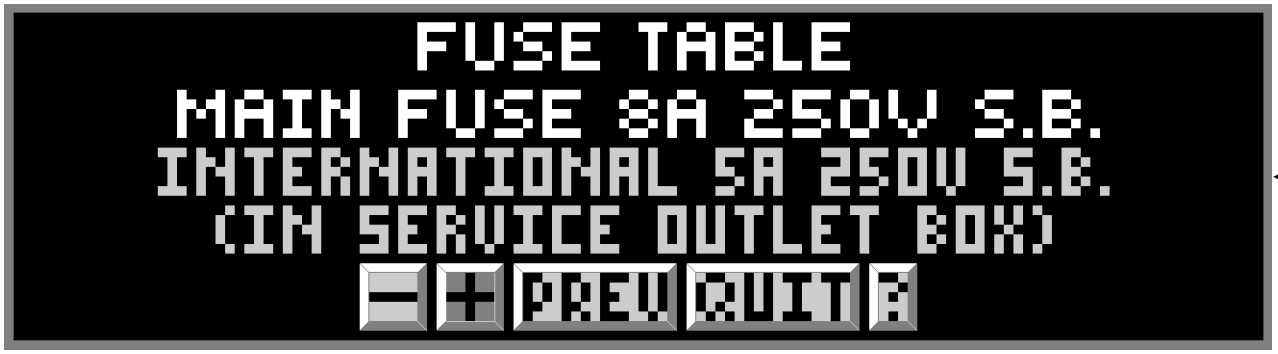

Select and *activate* the "+" *Mini-Icon* to view the next fuse in the group. Continue to select either the "+" or "-" *Mini-Icons* to view each fuse one at a time. The display will describe the fuse identification number (e.g. Main, F1, F6, F7, etc.), rating of fuse (e.g. 5A 250v S.B. - i.e. 5 Amp, 250 volt, Slo-Blo), location of fuse (i.e. Backbox: Board Name located on; or Cabinet: Under the playfield or in Service Outlet), and 'use of fuse' (e.g. 90v DC High Voltage Power, etc.). The current fuse listed will remain in the display until the next fuse is chosen or when the Sub-Menu is exited by selecting & *activating* the "PREV" or "QUIT" *Mini-Icons*.

Go To Fuse Table continued on the next page.

Backbox PCB Fuses, ROMs, Bridges, Relays, P/F & Cabinet Fuses, Cab. Switches

CAUTION: *For continued protection against risk of fire, replace only with same type of fuse having the same electrical rating!*

QUICK REFERENCE FUSE CHART

Backbox Fuses			
LOC: DISPLAY POWER SUPPLY (P.S.) BOARD			
F1	¾A250v S.B.	90v DC	High Voltage Display
LOC: I / O POWER DRIVER BOARD			
F6	7A 250v S.B.	50v DC	Primary High Power Coils/Flippers
F7	5A 250v S.B.	20v DC	Low Power Coils
F8	5A 250v S.B.	12v DC	Logic Power
F9	5A 250v S.B.	12v DC	Logic Power
F20	4A 250v S.B.	50v DC	Magnets
F21	3A 250v S.B.	50v DC	Coils
F22	8A 250v S.B.	18v DC	Controlled Lamps
F23	4A 250v S.B.	5v DC	Logic
F24	5A 250v S.B.	6.3v AC	G.I. Lamps (BRN-WHT⇆WHT-BRN)
F25	5A 250v S.B.	6.3v AC	G.I. Lamps (YEL⇆WHT-YEL)
F26	5A 250v S.B.	6.3v AC	G.I. Lamps (GRN⇆WHT-GRN)
F27	5A 250v S.B.	6.3v AC	G.I. Lamps (VIO⇆WHT-VIO)
F28	3A 250v S.B.	24v AC	**Not Used / Spare**
Cabinet Fuses			
LOC: SERVICE (AC) OUTLET BOX (Cabinet Bottom)			
n/a	8A 250v S.B.	115v AC	Main Fuse Line (Domestic or USA)
n/a	5A 250v S.B.	220v AC	Main Fuse Line (International)
Playfield (P/F) Fuses			
LOC: UNDER PLAYFIELD *(near the assembly)*			
n/a	3A 250v S.B.	50v DC	Right Flipper (BLU-YEL⇆RED-YEL)
n/a	3A 250v S.B.	50v DC	Left Flipper (GRY-YEL⇆RED-YEL)
n/a	3A 250v S.B.	50v DC	Up/Dn Car Mech (GRY-GRN⇆BLU-BLK)

*For locations & more information on fuses, see Sec. **5**, Chapter **2**.*

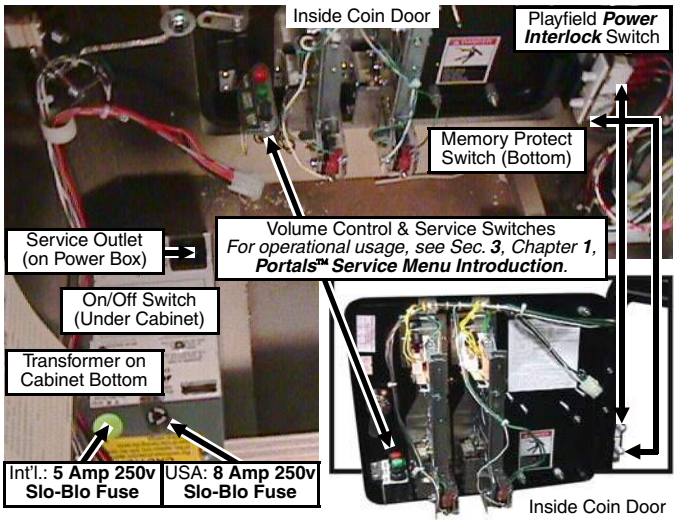

ROM TYPE on BD	LOCATION	SIZE	PART NUMBER
CPU Sound	U7	512K	965-0429-86
CPU Game	U210	1 MB	965-0430-86
CPU Voice ROM 1	U17	8 MB	965-0431-86
CPU Voice ROM 2	U21	8 MB	965-0432-86
CPU Voice ROM 3	U36	8 MB	965-0433-86
CPU Voice ROM 4	U37	8 MB	965-0434-86
DISPLAY Controller	U5	4 MB	965-0435-86

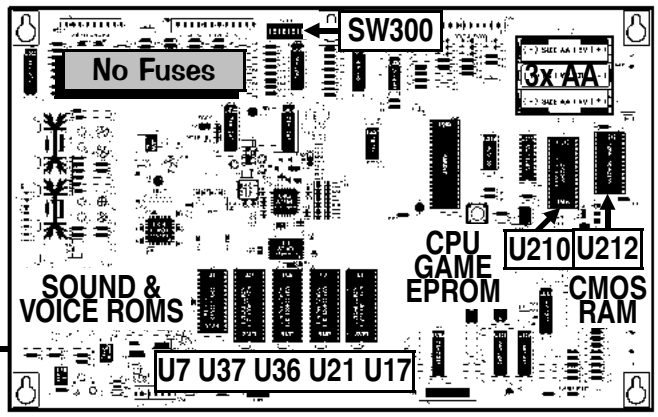

◀ Display Power Supply Bd.

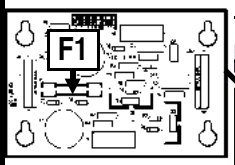

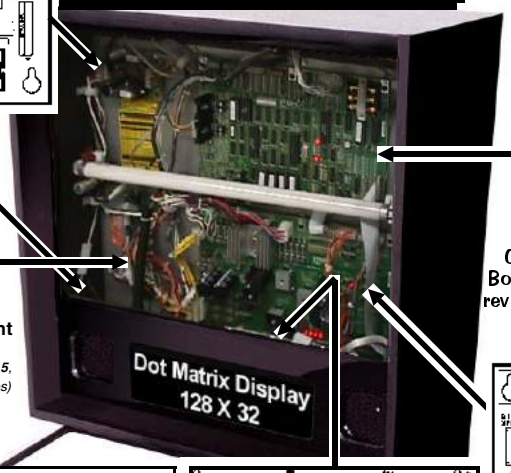

Solenoid Expander Board ‡

Tournament Interface Board ‡

‡ **UK or Tournament GAMES ONLY**

*For more info., see Section **5**, Chp. **4**, **PCBs** (Yellow Pages)*

For Schematics and/or Component Parts on PC Boards shown on this page, review Section 5, Chapter 4, Printed Circuit Boards (The Yellow Pages).

CPU/Sound Bd. II w/ATMEL ▲

I/O Power Driver Board ▼

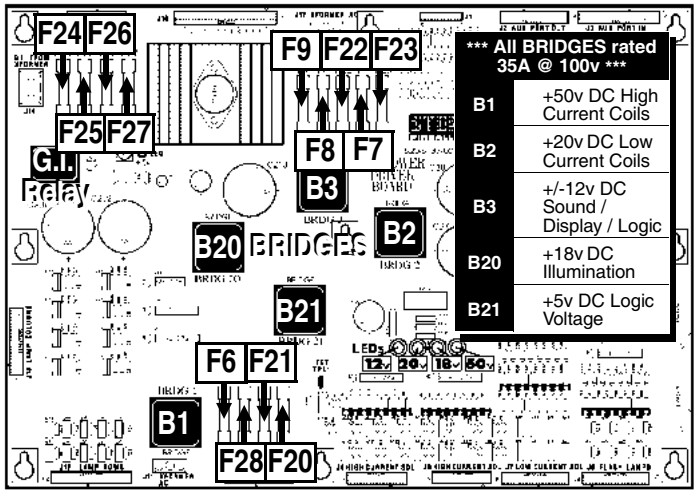

Display Controller Bd. ▶

The Display Controller has the Display EPROM (Location: U5 / ROM 0). This board is located behind the 128 X 32 Dot Matrix Display Board.

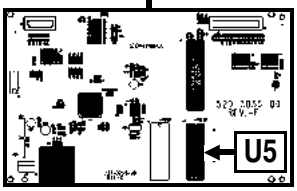

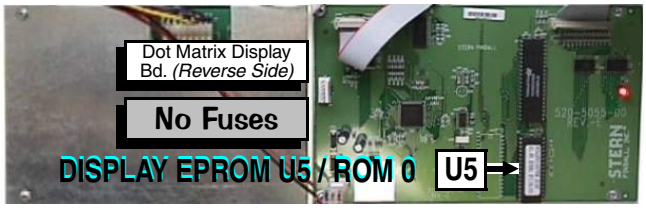

Dr. Pinball

To initiate, from the **DIAGNOSTICS MENU**, select the Cross "DR." *Icon* with either the **Red "LEFT"** or **Green "RIGHT" Buttons** and press the **Black "ENTER" Button**. This will bring you (the operator / technician) into **DR. PINBALL** (**Flow Chart Menus**) which offers you a choice of three (3) *Icons:* Coil "DR.", Switch "DR." and Lamp "DR." *Icons.* Selecting a particular *Icon* will give you a choice of which specific Coil *(any and all coil assemblies such as Flippers, VUKs, Magnets, etc.),* Switch or Lamp circuit needs to be diagnosed. *Dr. Pinball* will now display a question or give a procedure to follow such as "Does the lamp turn on?" or "Check bridge rectifier BR-20, if short replace." When *Dr. Pinball* displays a question or requests a procedure, *Dr. Pinball* will expect a response such as "NO" or "YES" *(see below examples of the Mini-Icons* which will prompt the operator). You the operator/technician must respond by using the **Red** or **Green Buttons** to "SELECT" a *Mini-Icon* and the **Black Button** to "ACTIVATE or ENTER" your selection.

Coil Flow Chart

To initiate, from the **DR. PINBALL MENU**, select the Coil "DR." *Icon* with either the **Red** or **Green Buttons** and press the **Black Button**. This is the **Coil Flow Chart**. Follow the questions, answering by using the *Mini-Icons* in the display.

Switch Flow Chart

To initiate, from the **DR. PINBALL MENU**, select the Switch "DR." *Icon* with either the **Red** or **Green Buttons** and press the **Black Button**. This is the **Switch Flow Chart**. Follow the questions, answering by using the *Mini-Icons* in the display.

Lamp Flow Chart

To initiate, from the **DR. PINBALL MENU**, select the Lamp "DR." *Icon* with either the **Red** or **Green Buttons** and press the **Black Button**. This is the **Lamp Flow Chart**. Follow the questions, answering by using the *Mini-Icons* in the display.

The following are the *Mini-Icons* with explanations for the **DR. PINBALL** Sub-Menus:

Select and *activate* either the "-" or "+" *Mini-Icons* to diagnose a Coil, Lamp or Switch. Select and *activate* the "RUN" *Mini-Icon* to test selected item. The "PREV" *Mini-Icon* allows you to go back to previous question. Select the "QUIT" *Mini-Icon* to exit **Portals™** completely. Select the "?" *Mini-Icon* (Help) to see directions on button usage.

Select and *activate* either the "NO or "YES" *Mini-Icons* to answer a question given. Select and *activate* the "END" *Mini-Icon* to change to a new item to test. The "PREV" *Mini-Icon* allows you to go back to previous question. Select the "QUIT" *Mini-Icon* to exit **Portals™** completely. Select the "?" *Mini-Icon* (Help) to see directions on button usage.

After a diagnosis is given, select and *activate* the "END" *Mini-Icon* to change to a new item to test. The "PREV" *Mini-Icon* allows you to go back to previous display. Select the "QUIT" *Mini-Icon* to exit **Portals™** completely. Select the "?" *Mini-Icon* (Help) to see directions on button usage.

In **COIL FLOW CHART MENU**, select and *activate* the "PULSE" *Mini-Icon* to pulse the coil selected. Select and *activate* the "END" *Mini-Icon* to change to a new item to test. The "PREV" *Mini-Icon* allows you to go back to previous question. Select the "QUIT" *Mini-Icon* to exit **Portals™** completely. Select the "?" *Mini-Icon* (Help) to see directions on button usage.

STARTING METER Reading : | STARTING METER Date (MM/DD/YR) : 0 | AUDITOR'S NAME : | CURRENT VOLUME SETTING:

CURRENT METER Reading : | AUDIT Date (MM/DD/YR) : 0 | CPU Version : . | DISPLAY Version : . | GAME LOCATION NAME :

EARNINGS & STANDARD AUDIT TABLES

EARNINGS AUDITS 01-14 = ✎

Audit definitions follow in this Chapter.

01	TOTAL PAID CREDITS	
02	FREE GAME PERCENTAGE	
03	AVERAGE BALL TIME	
04	AVERAGE GAME TIME	
05	COINS THRU LEFT SLOT	
06	COINS THRU RIGHT SLOT	
07	COINS THRU CENTER SLOT	
08	COINS THRU 4TH SLOT	
09	COINS THRU 5TH SLOT	
10	COINS THRU 6TH SLOT	
11	TOTAL COINS	
12	TOTAL EARNINGS	
13	METER CLICKS	
14	SOFTWARE METER	

STANDARD AUDITS 01-68 = ✎

Audit definitions follow in this Chapter.

To track Feature & Tournament Audits, see Pages 36 or 54.

01	TOTAL BALLS PLAYED	
02	TOTAL EXTRA BALLS	
03	EXTRA BALL PERCENT	
04	REPLAY 1 AWARDS	
05	REPLAY 2+ AWARDS	
06	TOTAL REPLAYS	
07	REPLAY PERCENT	
08	TOTAL SPECIALS	
09	SPECIAL PERCENT	
10	TOTAL MATCHES	
11	HIGH SCORE AWARDS	
12	HIGH SCORE PERCENT	
13	TOTAL FREE PLAYS	
14	TOTAL PLAYS	
15	0–1.9M SCORES	
16	2M–3.9M SCORES	
17	4M–5.9M SCORES	
18	6M–7.9M SCORES	
19	8M–9.9M SCORES	
20	10M–12.4M SCORES	
21	12.5M–14.9M SCORES	
22	15M–17.4M SCORES	
23	17.5M–19.9M SCORES	
24	20M–22.4M SCORES	
25	22.5M–24.9M SCORES	
26	25M–34.9M SCORES	
27	35M–49.9M SCORES	
28	50M–74.9M SCORES	
29	75M–99.9M SCORES	
30	100M–149.9M SCORES	
31	150M+ SCORES	
32	AVERAGE SCORES	
33	SERVICE CREDITS	
34	BALL SEARCH STARTED	
35	LOST BALL FEEDS	
36	LOST BALL GAME STARTS	
37	LEFT DRAINS	
38	CENTER DRAINS	
39	RIGHT DRAINS	
40	TILTS	
41	TOTAL BALLS SAVED	
42	PROPRIETARY	
43	PROPRIETARY	
44	PROPRIETARY	
45	PROPRIETARY	
46	PROPRIETARY	
47	PROPRIETARY	
48	PROPRIETARY	
49	PROPRIETARY	
50	BASE REPLAY	
51	LEFT FLIPPER USED	
52	RIGHT FLIPPER USED	
53	PROPRIETARY	
54	PROPRIETARY	
55	0–1 MINUTE GAMES	
56	1 – 1.5 MINUTE GAMES	
57	1.5 – 2 MINUTE GAMES	
58	2 – 2.5 MINUTE GAMES	
59	2.5 – 3 MINUTE GAMES	
60	3 – 3.5 MINUTE GAMES	
61	3.5 – 4 MINUTE GAMES	
62	4 – 5 MINUTE GAMES	
63	5 – 6 MINUTE GAMES	
64	6 – 8 MINUTE GAMES	
65	8 – 10 MINUTE GAMES	
66	10 – 15 MINUTE GAMES	
67	15+ MINUTE GAMES	
68	RECENT REPLAY PERCENT	

Note: *Audits are subject to change (with or without notice).*

back to Page 32

Go To Audits Menu

Overview

The **Portals™ Service Menu System** provides **114** Audits for accounting purposes and for evaluation of *Game Programming*. The Audits are divided into 3 groups: • **Earnings Audits** (Audits **01-14**), • **Standard Audits** (Audits **01-68**) and • **Feature Audits (Programming Use Only)** (Audits **01-32**). *For details on **Tournament Audits**, see Section **3**, Chapter **7**, **GO TO TOURNAMENT MENU**.* Audits which are named **Proprietary** are also for ***Future Expansion*** or ***Programming***. Game code may get upgraded during production; compare all Audits in the display with the manual and make any corrections to the Audit Table *(previous page)*, as necessary. Audits are subject to change *(with or without notice)*. To view Audits in the display, enter the **Portals™ Service Menu System**. *For how to **RESET** Audits, see Section **3**, Chapter **6**, **GO TO RESET MENU**.*

EXPLANATION & USAGE OF COMMON LARGE & MINI-ICONS USED IN VARIOUS MENUS & SUB-MENUS:

GO TO AUDITS MENU

After entering **Portals™**, the **MAIN MENU** now appears. Select the "AUD" *Icon* in the **MAIN MENU** with either the **Red "LEFT"** or **Green "RIGHT" Buttons** (the **Flipper Buttons** operates in the same manner) and press the **Black "ENTER" Button** (the **Start Button** operates in the same manner). The **AUDITS MENU** appears. Continue through this chapter for the explanation & usage of the *Icons* in the **AUDITS MENU**.

Earnings Audits (01-14)

To initiate, from the **AUDITS MENU**, select the "EARN" *Icon* with either the **Red "LEFT"** or **Green "RIGHT" Buttons** and press the **Black "ENTER" Button**. Select and *activate* either of the ">>" *Mini-Icons* to view the next or previous Audit in this group. The display will describe the **Audit Number**, **Audit Name** and the **Current Audit Total** (Value). The current Audit will remain in the display until the next Audit is viewed or when this Menu is exited.

Nr.	EARNINGS AUDIT NAME: Definition
01	**TOTAL PAID CREDITS:** Provides the total number of *Paid Credits.*
02	**FREE GAME PERCENTAGE:** Provides the percentage total by dividing Standard Audit **13**, **TOTAL FREE PLAYS**, by Standard Audit **14**, **TOTAL PLAYS**.
03	**AVERAGE BALL TIME:** In seconds, the average ball time is derived from the total play time divided by Standard Audit **01**, **TOTAL BALLS PLAYED**.
04	**AVERAGE GAME TIME:** The average game time is expressed in minutes and seconds (0:00).
05	**COINS THRU LEFT SLOT:** Provides the total number of times Coin Mechanism Switch 06 was closed.
06	**COINS THRU RIGHT SLOT:** Provides the total number of times Coin Mechanism Switch 04 was closed.
07	**COINS THRU CENTER SLOT:** Provides the total number of times Coin Mechanism Switch 05 was closed.
08	**COINS THRU 4TH SLOT:** Provides the total number of times Coin Mechanism Switch 02 was closed.
09	**COINS THRU 5TH SLOT:** Provides the total number of times Coin Mechanism Switch 07 was closed.
10	**COINS THRU 6TH SLOT:** Provides the total number of times Coin Mechanism Switch 03 was closed.
11	**TOTAL COINS:** Provides the total amount of coins registered through all the *Coin Slots.*
12	**TOTAL EARNINGS:** The total cash value accumulated since the last Factory Reset occurred. *See Section **3**, Chapter **6**, **GO TO RESET MENU**, **Reset Coin Audits**.*
13	**METER CLICKS:** Provides the total number of money clicks accumulated. *Based on the country's lowest coin denomination used for the game credit.*
14	**SOFTWARE METER:** Provides the continuing total of Meter Clicks. *This audit cannot be reset; the display shows the constant addition of Meter Clicks.*

Standard Audits (01-68)

To initiate, from the **AUDITS MENU**, select the "S.P.I." *Icon* with either the **Red "LEFT"** or **Green "RIGHT" Buttons** and press the **Black "ENTER" Button**. Select and *activate* either of the ">>" *Mini-Icons* to view the next or previous Audit in this group. The display will describe the **Audit Number**, **Audit Name** and the **Current Audit Total** (Value). The current Audit will remain in the display until the next Audit is viewed or when this Menu is exited.

Nr.	STANDARD AUDIT NAME: Definition
01	**TOTAL BALLS PLAYED:** Provides the total number of *Regular* and *Extra Balls.*
02	**TOTAL EXTRA BALLS:** Provides the total number of *Extra Balls* awarded.
03	**EXTRA BALLS PERCENT:** Provides the percentage total by dividing Standard Audit **02**, **TOTAL EXTRA BALLS**, by Standard Audit **14**, **TOTAL PLAYS**.
04	**REPLAY 1 AWARDS:** Provides the total *Awards (Credits, Extra Balls or Scores)* for Level 1.
05	**REPLAY 2+ AWARDS:** Provides the total *Awards (Credits, Extra Balls or Scores)* for Level 2 or higher.
06	**TOTAL REPLAYS:** Provides the total *Awards (Credits, Extra Balls or Scores)* for exceeding *Replay Score Levels.*
07	**REPLAY PERCENT:** Provides the percentage total from dividing Standard Audit **06**, **TOTAL REPLAYS**, by Standard Audit **14**, **TOTAL PLAYS**. The percentage reflects replay total awards for exceeding replay score levels.
08	**TOTAL SPECIALS:** Provides the total *Awards (Credits, Extra Balls, or Scores)* for making *Specials.*
09	**SPECIAL PERCENT:** Provides the percentage total by dividing Standard Audit **08**, **TOTAL SPECIALS**, by Standard Audit **14**, **TOTAL PLAYS**.
10	**TOTAL MATCHES:** Provides the total *Credits* awarded for matching the last two digits of the score with the *System-Generated Match Number* at the end of the game. Percentage of *Match Credits* is adjustable from **0%** to **10%** by Standard Adjustment **13**, **MATCH PERCENTAGE**, if enabled. *See Section **3**, Chapter **4**, **GO TO ADJUSTMENTS MENU**, **Standard Adjustments***.
11	**HIGH SCORE AWARDS:** Provides the total *Awards (Credits, Extra Balls, or Scores)* for exceeding the High-Score-To-Date scores.
12	**HIGH SCORE PERCENT:** Provides the percentage total by dividing Standard Audit **11**, **HIGH SCORE AWARDS**, by Standard Audit **14**, **TOTAL PLAYS**.
13	**TOTAL FREE PLAYS:** Provides the total *Free Credits* for *Replays, High-Score-To-Date, Specials and Match.*
14	**TOTAL PLAYS:** This total is derived by adding the sum of Earnings Audit **01**, **TOTAL PAID CREDITS**, and Standard Audit **13**, **TOTAL FREE PLAYS**. ***Note:*** *Free Credits are not recorded in the Audit until they are actually used.*
15	**0–1.9M SCORES:** Provides the total number of games the Player's final score was **0** and **1,999,990** points.
16	**2M–3.9M SCORES:** ... and the Player's final score was between **2,000,000** and **3,999,990** points.
17	**4M–5.9M SCORES:** ... and the Player's final score was between **4,000,000** and **5,999,990** points.
18	**6M–7.9M SCORES:** ... and the Player's final score was between **6,000,000** and **7,999,990** points.
19	**8M–9.9M SCORES:** ... and the Player's final score was between **8,000,000** and **9,999,990** points.
20	**10M–12.4M SCORES:** ... and the Player's final score was between **10,000,000** and **12,499,990** points.
21	**12.5M–14.9M SCORES:** ... and the Player's final score was between **12,500,000** and **14,499,990** points.
22	**15M–17.4M SCORES:** ... and the Player's final score was between **15,000,000** and **17,499,990** points.
23	**17.5M–19.9M SCORES:** ... and the Player's final score was between **17,500,000** and **19,999,990** points.
24	**20M–22.4M SCORES:** ... and the Player's final score was between **20,000,000** and **22,499,990** points.
25	**22.5M–24.9M SCORES:** ... and the Player's final score was between **22,500,000** and **24,999,990** points.
26	**25M–34.9M SCORES:** ... and the Player's final score was between **25,000,000** and **34,999,990** points.
27	**35M–49.9M SCORES:** ... and the Player's final score was between **35,000,000** and **49,999,990** points.
28	**50M–74.9M SCORES:** ... and the Player's final score was between **50,000,000** and **74,999,990** points.
29	**75M–99.9M SCORES:** ... and the Player's final score was between **75,000,000** and **99,999,990** points.
30	**100M–149.9M SCORES:** ... and the Player's final score was between **100,000,000** and **149,999,990** points.
31	**150M+ SCORES:** Provides the total number of games the Player's final score was **150,000,000** points and over.
32	**AVERAGE SCORES:** This total is derived from adding the *Final Score* of each game to a table and dividing this sum by Standard Audit **14**, **TOTAL PLAYS**.

Standard Audits 33-68 continued on the next page.

	STANDARD AUDIT NAME: Definition
33	**SERVICE CREDITS:** Provides the total number of times the **Portals™ Green Button** (Dedicated Switch 7) was pushed in **Attract Mode**. *See Section **3**, Chapter **1**, **Service Switch Set Access & Use**, for how to receive Service Credits. See Sec. **3**, Chp. **6**, **GO TO RESET MENU**, **Reset Credits**, for how to delete Service (and Paid Credits).*
34	**BALL SEARCH STARTED:** Provides the total number of times the game performed a *Ball Search*.
35	**LOST BALL FEEDS:** Provides the total number of times the game added a pinball to play when it could not find a pinball after *Ball Search*. *See Section **3**, Chapter **2**, **GO TO DIAGNOSTICS MENU**, **Technicians Alert** [Pinball Detection].*
36	**LOST BALL GAME STARTS:** Provides the total number of times the game started with a pinball missing from the ball trough at the start of a game. *See Section **3**, Chapter **2**, **GO TO DIAGNOSTICS MENU**, **Technicians Alert** [Pinball Detection].*
37	**LEFT DRAINS:** Provides the total number of times Rollover Switch 57 was closed.
38	**CENTER DRAINS:** Provides the total number of times the pinball had drained when the last switch closed was not Switch 57 or Switch 60.
39	**RIGHT DRAINS:** Provides the total number of times Rollover Switch 60 was closed.
40	**TILTS:** Provides the total number of times Contact Switch 56 was closed.
41	**TOTAL BALLS SAVED:** Provides the total number of times this feature was used *(this feature can be turned ON or OFF, see Standard Adj. **38**, **FREEZE TIME** in Section **3**, Chapter **4**, **GO TO ADJUSTMENTS MENU, Standard Adjustments**).* This feature is enabled at the start of each pinball and is disabled as soon as a predetermined number of switches are "closed" ***or*** the allocated time has expired.
>>	**42 - 49 PROPRIETARY:** Proprietary Audits are used for ***Future Expansion*** or ***Programming***.
50	**BASE REPLAY:** Provides the current base *Replay Level Score*.
51	**LEFT FLIPPER USED:** Provides the total number of times the **Left Flipper Button** (Dedicated Switch 1) was pushed in **Game Mode**.
52	**RIGHT FLIPPER USED:** Provides the total number of times the **Right Flipper Button** (Dedicated Switch 3) was pushed in **Game Mode**.
>>	**53 - 54 PROPRIETARY:** Proprietary Audits are used for ***Future Expansion*** or ***Programming***.
55	**0 - 1 MINUTE GAMES:** Provides the total number of games the total game time was between **0:00** and **1:00** minute.
56	**1 – 1.5 MINUTE GAMES:** Provides the total number of games the total game time was between **1:00** and **1:30** minutes.
57	**1.5 – 2 MINUTE GAMES:** Provides the total number of games the total game time was between **1:30** and **2:00** minutes.
58	**2 – 2.5 MINUTE GAMES:** Provides the total number of games the total game time was between **2:00** and **2:30** minutes.
59	**2.5 – 3 MINUTE GAMES:** Provides the total number of games the total game time was between **2:30** and **3:00** minutes.
60	**3 – 3.5 MINUTE GAMES:** Provides the total number of games the total game time was between **3:00** and **3:30** minutes.
61	**3.5 – 4 MINUTE GAMES:** Provides the total number of games the total game time was between **3:30** and **4:00** minutes.
62	**4 – 5 MINUTE GAMES:** Provides the total number of games the total game time was between **4:00** and **5:00** minutes.
63	**5 – 6 MINUTE GAMES:** Provides the total number of games the total game time was between **5:00** and **6:00** minutes.
64	**6 – 8 MINUTE GAMES:** Provides the total number of games the total game time was between **6:00** and **8:00** minutes.
65	**8 – 10 MINUTE GAMES:** Provides the total number of games the total game time was between **8:00** and **10:00** minutes.
66	**10 – 15 MINUTE GAMES:** Provides the total number of games the total game time was between **10:00** and **15:00** minutes.
67	**15+ MINUTE GAMES:** Provides the total number of games the total game time was **15:00** and over.
68	**RECENT REPLAY PERCENT:** *Percent figured with programming thresholds for a determined number of games (again based on programming thresholds). The percentage reflects replay total awards for exceeding replay score levels.*

Feature Audits (01-32)

To initiate, from the **AUDITS MENU**, select the "NASC" *Icon* with either the **Red "LEFT"** or **Green "RIGHT" Buttons** and press the **Black "ENTER" Button**. Select and *activate* either of the ">>" *Mini-Icons* to view the next or previous Audit in this group. The display will describe the **Audit Number**, **Audit Name** and the **Current Audit Total** (Value). The current Audit will remain in the display until the next Audit is viewed or when this Menu is exited. **Audits Definition: Programming Use Only.** *The proprietary information provides the total number of times a feature was started, awarded, lit, played and/or completed (awarded); also, the total number of Switch Closures during certain modes or features are tracked (a predetermined single/multiple variations of switch closures are used to determine the lighting and/or completion of the feature stated).*

FEATURE AUDIT TABLE

FEATURE AUDITS 01-32 ✍ = ✎

***** PROGRAMMING USE ONLY *****
UNLABELED BOXES ARE FOR FUTURE EXPANSION.

01	LOCKS LIT		01	LOCKS LIT		01	LOCKS LIT	
02	1 BALL LOCKED		02	1 BALL LOCKED		02	1 BALL LOCKED	
03	2 BALLS LOCKED		03	2 BALLS LOCKED		03	2 BALLS LOCKED	
04	MULTIBALL STARTS		04	MULTIBALL STARTS		04	MULTIBALL STARTS	
05	JACKPOTS		05	JACKPOTS		05	JACKPOTS	
06	SUPER JACKPOTS		06	SUPER JACKPOTS		06	SUPER JACKPOTS	
07	TEST CAR HIT		07	TEST CAR HIT		07	TEST CAR HIT	
08	CAR SCOOPS		08	CAR SCOOPS		08	CAR SCOOPS	
09	GARAGE AWARDS		09	GARAGE AWARDS		09	GARAGE AWARDS	
10	SCANNER AWARDS		10	SCANNER AWARDS		10	SCANNER AWARDS	
11	LEFT RAMPS		11	LEFT RAMPS		11	LEFT RAMPS	
12	TRUCK AWARDS		12	TRUCK AWARDS		12	TRUCK AWARDS	
13	RIGHT RAMPS		13	RIGHT RAMPS		13	RIGHT RAMPS	
14	CHAMP1 LETTERS		14	CHAMP1 LETTERS		14	CHAMP1 LETTERS	
15	FLAG STANDUPS		15	FLAG STANDUPS		15	FLAG STANDUPS	
16	SHORT TRACK LAPS		16	SHORT TRACK LAPS		16	SHORT TRACK LAPS	
17	SPINNING CAR HITS		17	SPINNING CAR HITS		17	SPINNING CAR HITS	
18	TRACK PASSES LOW		18	TRACK PASSES LOW		18	TRACK PASSES LOW	
19	TRACK PASSES HIGH		19	TRACK PASSES HIGH		19	TRACK PASSES HIGH	
20	BONUS X COLLECTED		20	BONUS X COLLECTED		20	BONUS X COLLECTED	
21	GARAGE COMPLETED		21	GARAGE COMPLETED		21	GARAGE COMPLETED	
22	CHAMP1 COMPLETED		22	CHAMP1 COMPLETED		22	CHAMP1 COMPLETED	
23	PROPRIETARY 01		23	PROPRIETARY 01		23	PROPRIETARY 01	
24	PROPRIETARY 02		24	PROPRIETARY 02		24	PROPRIETARY 02	
25	PROPRIETARY 03		25	PROPRIETARY 03		25	PROPRIETARY 03	
26	PROPRIETARY 04		26	PROPRIETARY 04		26	PROPRIETARY 04	
27	PROPRIETARY 05		27	PROPRIETARY 05		27	PROPRIETARY 05	
28	PROPRIETARY 06		28	PROPRIETARY 06		28	PROPRIETARY 06	
29	PROPRIETARY 07		29	PROPRIETARY 07		29	PROPRIETARY 07	
30	PROPRIETARY 08		30	PROPRIETARY 08		30	PROPRIETARY 08	
31	PROPRIETARY 09		31	PROPRIETARY 09		31	PROPRIETARY 09	
32	PROPRIETARY 10		32	PROPRIETARY 10		32	PROPRIETARY 10	

Note: *Audits are subject to change (with or without notice).*

Go To Printer Menu (OPTIONAL USE ONLY)

Operational Usage Note: *The use of the following Sub-Menus are* ***OPTIONAL*** and provided as a *convenience only.* ***No special equipment was included with your Pinball Game.*** To initiate, from the **AUDITS MENU**, select the "PRNT" *Icon* with either the **Red "LEFT"** or **Green "RIGHT" Button** and press the **Black "ENTER" Button**. The **PRINTER MENU** appears. A **Quick / Full Printout Kit*** and **RS-232 Communication Device**** *(which can download serial information)* are required for proper operation of these Sub-Menus. *Entering the menus & selecting/activating the Icons without the equipment mentioned, will not affect the Pinball Game nor the operation of the* ***Portals™ Service Menu System*** *in any way.* For more details on the equipment & hardware required, installation and set-up, read the **Quick/Full Printout Set-Up Instruction Manual** *(SPI Part Number: 780-6012-00)* provided in the ***Quick/Full Printout Kit*** *(SPI Part Number: 502-5031-00)*.

**Not included with this ToPS™ Ready Pinball Game. **Not included in the Quick/Full Printout Kit.*

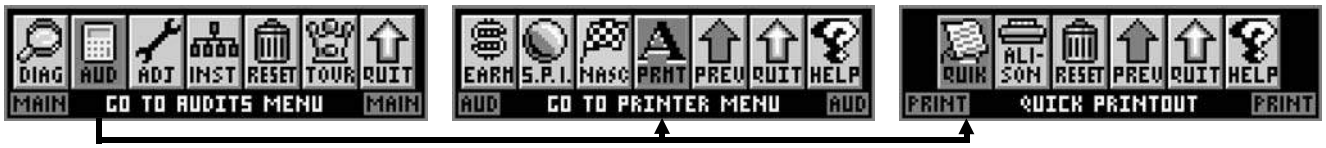

Quick Printout

To initiate, from the **PRINTER MENU**, select the "QUIK" *Icon* with either the **Red** or **Green Button** and press the **Black Button**. Select either the "-" or "+" *Mini-Icon* and press the **Black Button** to start the printout. Per the display instruction, the **Start Button** can also be pressed to start the printout. Only the **Earnings Audits** can be retrieved and/or printed for further processing.

Full Printout

To initiate, from the **PRINTER MENU**, select the "ALISON" *Icon* with either the **Red** or **Green Button** and press the **Black Button**. Select either the "-" or "+" *Mini-Icon* and press the **Black Button** to start the download. Per the display instruction, the **Start Button** can also be pressed to start the download. All **Earnings**, **Standard**, **Feature** & **Tournament Audits** can be retrieved and/or printed for further processing.

Reset Printer

To initiate, from the **PRINTER MENU**, select the "RESET" *Icon* with either the **Red** or **Green Button** and press the **Black Button**. Select either the "-" or "+" *Mini-Icon* and press the **Black Button** to clear the "Nº of copies printed" count total appearing in the display. ***Operational Usage Note:*** *Activating the "QUIK" Icon (in the previous Quick Printout)* ***without*** *the special equipment and unique software, will still provide a "count total" in this Reset Printer Menu, which does not affect the operation of the* ***Portals™ Service Menu System*** *in any way.* Activating this "RESET" *Icon* will reset the "count total" in the display to **00**.

For how to RESET Audits, see Section 3, Chapter 6, GO TO RESET MENU.

STARTING METER Reading : | STARTING METER Date (MM/DD/YR) : | AUDITOR'S NAME : | CURRENT VOLUME SETTING:

CURRENT METER Reading : | AUDIT Date (MM/DD/YR) : | CPU Version : | DISPLAY Version : | GAME LOCATION NAME :

EARNINGS & STANDARD AUDIT TABLES

EARNINGS AUDITS

01-14 ✍ = ✎ ◀◀ ▶▶

Audit definitions follow in this Chapter.

01	TOTAL PAID CREDITS	
02	FREE GAME PERCENTAGE	
03	AVERAGE BALL TIME	
04	AVERAGE GAME TIME	
05	COINS THRU LEFT SLOT	
06	COINS THRU RIGHT SLOT	
07	COINS THRU CENTER SLOT	
08	COINS THRU 4TH SLOT	
09	COINS THRU 5TH SLOT	
10	COINS THRU 6TH SLOT	
11	TOTAL COINS	
12	TOTAL EARNINGS	
13	METER CLICKS	
14	SOFTWARE METER	

STANDARD AUDITS

01-68 ✍ = ✎ ◀◀ ▶▶

Audit definitions follow in this Chapter.

To track Feature & Tournament Audits, see Pages 36 or 54.

01	TOTAL BALLS PLAYED	
02	TOTAL EXTRA BALLS	
03	EXTRA BALL PERCENT	
04	REPLAY 1 AWARDS	
05	REPLAY 2+ AWARDS	
06	TOTAL REPLAYS	
07	REPLAY PERCENT	
08	TOTAL SPECIALS	
09	SPECIAL PERCENT	
10	TOTAL MATCHES	
11	HIGH SCORE AWARDS	
12	HIGH SCORE PERCENT	
13	TOTAL FREE PLAYS	
14	TOTAL PLAYS	
15	0–1.9M SCORES	
16	2M–3.9M SCORES	
17	4M–5.9M SCORES	
18	6M–7.9M SCORES	
19	8M–9.9M SCORES	
20	10M–12.4M SCORES	
21	12.5M–14.9M SCORES	
22	15M–17.4M SCORES	
23	17.5M–19.9M SCORES	
24	20M–22.4M SCORES	
25	22.5M–24.9M SCORES	
26	25M–34.9M SCORES	
27	35M–49.9M SCORES	
28	50M–74.9M SCORES	
29	75M–99.9M SCORES	
30	100M–149.9M SCORES	
31	150M+ SCORES	
32	AVERAGE SCORES	
33	SERVICE CREDITS	
34	BALL SEARCH STARTED	
35	LOST BALL FEEDS	
36	LOST BALL GAME STARTS	
37	LEFT DRAINS	
38	CENTER DRAINS	
39	RIGHT DRAINS	
40	TILTS	
41	TOTAL BALLS SAVED	
42	PROPRIETARY	
43	PROPRIETARY	
44	PROPRIETARY	
45	PROPRIETARY	
46	PROPRIETARY	
47	PROPRIETARY	
48	PROPRIETARY	
49	PROPRIETARY	
50	BASE REPLAY	
51	LEFT FLIPPER USED	
52	RIGHT FLIPPER USED	
53	PROPRIETARY	
54	PROPRIETARY	
55	0–1 MINUTE GAMES	
56	1 – 1.5 MINUTE GAMES	
57	1.5 – 2 MINUTE GAMES	
58	2 – 2.5 MINUTE GAMES	
59	2.5 – 3 MINUTE GAMES	
60	3 – 3.5 MINUTE GAMES	
61	3.5 – 4 MINUTE GAMES	
62	4 – 5 MINUTE GAMES	
63	5 – 6 MINUTE GAMES	
64	6 – 8 MINUTE GAMES	
65	8 – 10 MINUTE GAMES	
66	10 – 15 MINUTE GAMES	
67	15+ MINUTE GAMES	
68	RECENT REPLAY PERCENT	

Note: *Audits are subject to change (with or without notice).*

Comments:

FEATURE AUDIT TABLE

FEATURE AUDITS
01-32 ✍ = ✎ ◀◀ ▶▶

***** PROGRAMMING USE ONLY *****
UNLABELED BOXES ARE FOR FUTURE EXPANSION.

01	LOCKS LIT	
02	1 BALL LOCKED	
03	2 BALLS LOCKED	
04	MULTIBALL STARTS	
05	JACKPOTS	
06	SUPER JACKPOTS	
07	TEST CAR HIT	
08	CAR SCOOPS	
09	GARAGE AWARDS	
10	SCANNER AWARDS	
11	LEFT RAMPS	
12	TRUCK AWARDS	
13	RIGHT RAMPS	
14	CHAMP1 LETTERS	
15	FLAG STANDUPS	
16	SHORT TRACK LAPS	
17	SPINNING CAR HITS	
18	TRACK PASSES LOW	
19	TRACK PASSES HIGH	
20	BONUS X COLLECTED	
21	GARAGE COMPLETED	
22	CHAMP1 COMPLETED	
23	PROPRIETARY 01	
24	PROPRIETARY 02	
25	PROPRIETARY 03	
26	PROPRIETARY 04	
27	PROPRIETARY 05	
28	PROPRIETARY 06	
29	PROPRIETARY 07	
30	PROPRIETARY 08	
31	PROPRIETARY 09	
32	PROPRIETARY 10	

01	LOCKS LIT	
02	1 BALL LOCKED	
03	2 BALLS LOCKED	
04	MULTIBALL STARTS	
05	JACKPOTS	
06	SUPER JACKPOTS	
07	TEST CAR HIT	
08	CAR SCOOPS	
09	GARAGE AWARDS	
10	SCANNER AWARDS	
11	LEFT RAMPS	
12	TRUCK AWARDS	
13	RIGHT RAMPS	
14	CHAMP1 LETTERS	
15	FLAG STANDUPS	
16	SHORT TRACK LAPS	
17	SPINNING CAR HITS	
18	TRACK PASSES LOW	
19	TRACK PASSES HIGH	
20	BONUS X COLLECTED	
21	GARAGE COMPLETED	
22	CHAMP1 COMPLETED	
23	PROPRIETARY 01	
24	PROPRIETARY 02	
25	PROPRIETARY 03	
26	PROPRIETARY 04	
27	PROPRIETARY 05	
28	PROPRIETARY 06	
29	PROPRIETARY 07	
30	PROPRIETARY 08	
31	PROPRIETARY 09	
32	PROPRIETARY 10	

01	LOCKS LIT	
02	1 BALL LOCKED	
03	2 BALLS LOCKED	
04	MULTIBALL STARTS	
05	JACKPOTS	
06	SUPER JACKPOTS	
07	TEST CAR HIT	
08	CAR SCOOPS	
09	GARAGE AWARDS	
10	SCANNER AWARDS	
11	LEFT RAMPS	
12	TRUCK AWARDS	
13	RIGHT RAMPS	
14	CHAMP1 LETTERS	
15	FLAG STANDUPS	
16	SHORT TRACK LAPS	
17	SPINNING CAR HITS	
18	TRACK PASSES LOW	
19	TRACK PASSES HIGH	
20	BONUS X COLLECTED	
21	GARAGE COMPLETED	
22	CHAMP1 COMPLETED	
23	PROPRIETARY 01	
24	PROPRIETARY 02	
25	PROPRIETARY 03	
26	PROPRIETARY 04	
27	PROPRIETARY 05	
28	PROPRIETARY 06	
29	PROPRIETARY 07	
30	PROPRIETARY 08	
31	PROPRIETARY 09	
32	PROPRIETARY 10	

Note: *Audits are subject to change (with or without notice).*

NASCAR®

MULTI-WEEK TOURNAMENT AUDIT TABLES

STARTING METER Reading :

STARTING METER Date (MM/DD/YR) :

AUDITOR'S NAME :

CURRENT VOLUME SETTING:

CURRENT METER Reading :

AUDIT Date (MM/DD/YR) :

CPU Version :

DISPLAY Version :

GAME LOCATION NAME :

01	TOTAL PLAYS	06	JACKPOT	11	ACCUM. EARNINGS
02	TOURNAMENT PLAYS	07	NET EARNINGS	12	ACCUM. TOUR EARNINGS
03	TOTAL QUALIFYING PLAYS	08	ACCUM. TOTAL PLAYS	13	ACCUM. JACKPOT
04	TOTAL GAME EARNINGS	09	ACCUM. TOUR. PLAYS	14	# TOURNAMENTS
05	TOTAL TOUR. EARNINGS	10	ACCUM. QUALIFYING PLAYS		

STARTING METER Reading :

STARTING METER Date (MM/DD/YR) :

AUDITOR'S NAME :

CURRENT VOLUME SETTING:

CURRENT METER Reading :

AUDIT Date (MM/DD/YR) :

CPU Version :

DISPLAY Version :

GAME LOCATION NAME :

01	TOTAL PLAYS	06	JACKPOT	11	ACCUM. EARNINGS
02	TOURNAMENT PLAYS	07	NET EARNINGS	12	ACCUM. TOUR EARNINGS
03	TOTAL QUALIFYING PLAYS	08	ACCUM. TOTAL PLAYS	13	ACCUM. JACKPOT
04	TOTAL GAME EARNINGS	09	ACCUM. TOUR. PLAYS	14	# TOURNAMENTS
05	TOTAL TOUR. EARNINGS	10	ACCUM. QUALIFYING PLAYS		

STARTING METER Reading :

STARTING METER Date (MM/DD/YR) :

AUDITOR'S NAME :

CURRENT VOLUME SETTING:

CURRENT METER Reading :

AUDIT Date (MM/DD/YR) :

CPU Version :

DISPLAY Version :

GAME LOCATION NAME :

01	TOTAL PLAYS	06	JACKPOT	11	ACCUM. EARNINGS
02	TOURNAMENT PLAYS	07	NET EARNINGS	12	ACCUM. TOUR EARNINGS
03	TOTAL QUALIFYING PLAYS	08	ACCUM. TOTAL PLAYS	13	ACCUM. JACKPOT
04	TOTAL GAME EARNINGS	09	ACCUM. TOUR. PLAYS	14	# TOURNAMENTS
05	TOTAL TOUR. EARNINGS	10	ACCUM. QUALIFYING PLAYS		

STARTING METER Reading :

STARTING METER Date (MM/DD/YR) :

AUDITOR'S NAME :

CURRENT VOLUME SETTING:

CURRENT METER Reading :

AUDIT Date (MM/DD/YR) :

CPU Version :

DISPLAY Version :

GAME LOCATION NAME :

01	TOTAL PLAYS	06	JACKPOT	11	ACCUM. EARNINGS
02	TOURNAMENT PLAYS	07	NET EARNINGS	12	ACCUM. TOUR EARNINGS
03	TOTAL QUALIFYING PLAYS	08	ACCUM. TOTAL PLAYS	13	ACCUM. JACKPOT
04	TOTAL GAME EARNINGS	09	ACCUM. TOUR. PLAYS	14	# TOURNAMENTS
05	TOTAL TOUR. EARNINGS	10	ACCUM. QUALIFYING PLAYS		

STANDARD & FEATURE ADJUSTMENT TABLES

STANDARD ADJUSTMENTS 01-55

Nr.	ADJUSTMENT NAME	USA DEFAULT	YOUR SETTING
01	REPLAY TYPE	AUTO	
02*	REPLAY PERCENTAGE	10%	
03	REPLAY AWARD	CREDIT	
04*	REPLAY LEVELS	1: 20,000,000	
05	REPLAY BOOST	YES	
06	SPECIAL AWARD	CREDIT	
07*	SPECIAL PERCENTAGE	0%	
08	FREE GAME LIMIT	05	
09*	EXTRA BALL LIMIT	09	
10*	EXTRA BALL PERCENTAGE	25%	
11	GAME PRICING	USA 5	
12	MATCH AWARD	CREDIT	
13*	MATCH PERCENTAGE	9%	
14	BALLS PER GAME	03	
15	TILT WARNINGS	01	
16	CREDIT LIMIT	30	
17	ALLOW HIGH SCORES	YES	
18	GRAND CHAMPION AWARDS	01	
19	HIGH SCORE #1 AWARDS	01	
20	HIGH SCORE #2 AWARDS	00	
21	HIGH SCORE #3 AWARDS	00	
22	HIGH SCORE #4 AWARDS	00	
23*	GRAND CHAMPION SCORE	100,000,000	
24*	DEFAULT HIGH SCORE #1	65,000,000	
25*	DEFAULT HIGH SCORE #2	55,000,000	
26*	DEFAULT HIGH SCORE #3	50,000,000	
27*	DEFAULT HIGH SCORE #4	45,000,000	
28	HSTD RESET COUNT	2,000	

Nr.	ADJUSTMENT NAME	USA DEFAULT	YOUR SETTING
29	HIGH SCORE INITIALS	3 INITIALS	
30	FREE PLAY	NO	
31	CUSTOM MESSAGE	ON	
32	FLASH LAMP POWER	NORMAL	
33	COIL PULSE POWER	NORMAL	
34	KNOCKER VOLUME	NORMAL	
35	GAME RESTART	YES	
36	BILL VALIDATOR	NO	
37	BKGRND MUSIC VOLUME	01	
38*	FREEZE TIME	0:09	
39	UK POST SAVE ENABLED	NO	
40	TIMED PLUNGER	OFF	
41	FLIPPER BALL LAUNCH	DISABLED	
42	COINDOOR BALL SAVER	NO	
43	COMPETITION MODE	NO	
44	CONSOLATION BALL	NO	
45	FAST BOOT	YES	
46	Q24 OPTION	COIN METER	
47	TICKET DISP. INSTALLED	NO	
48	ALLOW PLAYER COMP. MODE	YES	
49	TECH ALERT WARNING	NEVER	
50	TEAM SCORES	NO	
51	LOCATION ID	00	
52	GAME ID	00	
53	FLIPPER ADJ 1	20	
54	FLIPPER ADJ 2	50	
55	FLIPPER ADJ 3	3	

Note: *Adjustments and/or variables are subject to change (with or without notice).*

**** Defaults are subject to change during production (especially 02, 04, 07, 09, 10, 13, 23-27 & 38).***

Note: *If **Game & Display ROMs** other than USA are installed, along with the proper Dip Switch Settings, different Defaults will appear. If changes are made (or your Defaults are not USA), enter them with pencil in the **YOUR SETTING** spaces provided for reference.*

SHORTCUT TO STANDARD ADJUSTMENT 31.

FEATURE ADJUSTMENTS 01-35

Nr.	ADJUSTMENT NAME	USA DEFAULT	YOUR SETTING
01	BONUS CARRYOVER	NO	
02	POPS LIT GAME START	01	
03	EXTRA BALL MEMORY	YES	
04	CAR START POSITION	10	
05	GARAGE READY HITS	02	
06	FLAGS LIT G.START	02	
07	LOCK DIFFICULTY	MODERATE	
08	RACE LTRS GAME START	01	
09	RACE LTR ASSIST	YES	
10	SPELL RACE GAME START	02	
11	HAPPY HOUR GOAL	01	
12	INFIELD PARTY GOAL	01	
13	SHORT TRACK GOAL	01	
14	TEST CAR GOAL	01	
15	HAULER RIDE GOAL	01	
16	BUMP N RUN GOAL	01	

Nr.	ADJUSTMENT NAME	USA DEFAULT	YOUR SETTING
17	RIGHT SIDES GOAL	01	
18	SUPERFAN GOAL	01	
19	GAS N GO GOAL	01	
20	LAPS TO ROAD COURSE	30	
21	LAPS TO NEXT ROAD	25	
22	SMART BALL SAVER	YES	
23	MODE TIME SECONDS	25	
24	MAX BALL SAVERS	1	
25	TRACK SAVER	YES	
26	EMPTY LOCKS AT G.O.	YES	
27	DISABLE TRACK	NO	
28	SPOT UNLIT SCANNER	YES	
29	TRACK ADJUST 1	00	
30	TRACK ADJUST 2	00	
31-35	PROPRIETARY 1-5	*varies* (proprietary info)	

back to Page 38

Go To Adjustments Menu

Overview

The **Portals™ Service Menu System** provides **90** Adjustments to vary Game Functions to customize for your particular needs. The Adjustments are divided into 2 groups: • **Standard Adjustments** (**01-55**) and • **Feature Adjustments** (**01-35**). Game code may get upgraded during production; compare all Adjustments in the display with the manual and make any corrections to the Adjustment Table *(previous page)*, as necessary. Adjustments are subject to change *(with or without notice)*. To view Adjustments in the display, enter the **Portals™ Service Menu System**. When a change is made and then the next / previous Adjustment is selected *(or the Sub-Menu is exited)*, the display will momentarily flash **REQUEST INSTALLED**. *For **further customization** of **Game Play Difficulty** or **Game Play Type** or how to **RESET ONLY** the **Adjustments**, see Section **3**, Chapter **5**, **GO TO INSTALLS MENU**.*

***Important:** The **Coin Door** must be **OPEN** allowing the **Memory Protect Switch** to be disabled, so any Adjustment changes can be made.*

EXPLANATION & USAGE OF COMMON LARGE & MINI-ICONS USED IN VARIOUS MENUS & SUB-MENUS:

Select and activate to:

Move **LEFT** or **RIGHT**, *select previous / next or move backwards / forwards.*

DECREMENT (-) or **INCREMENT (+)** *displayed value or select previous / next.*

These ***non-selectable Icons*** *appear in the selected Menu only when there are* **MORE** Icons to the **LEFT** or to the **RIGHT** available for selection.

Select and activate to return to the **PREVIOUS** Menu.

Select and activate to **QUIT**, *exits & returns to the* ***Attract Mode***.

Select and activate to view **HELP** *Screens of the current Menu*.*

**** Help Note:** An explanation of each Mini-Icon at that menu level will cycle continuously. To exit a display where no Mini-Icons are available for selection, pressing any button will exit the display.*

GO TO ADJUSTMENTS MENU

After entering **Portals™**, the **MAIN MENU** now appears. Select the "ADJ" *Icon* in the **MAIN MENU** with either the **Red "LEFT"** or **Green "RIGHT" Buttons** (the **Flipper Buttons** operates in the same manner) and press the **Black "ENTER" Button** (the **Start Button** operates in the same manner). The **ADJUSTMENTS MENU** appears. Continue through this chapter for the explanation & usage of the *Icons* in the **ADJUSTMENTS MENU**.

Standard Adjustments (01-55)

To initiate, from the **ADJUSTMENTS MENU**, select the "S.P.I." *Icon* with either the **Red "LEFT"** or **Green "RIGHT" Buttons** and press the **Black "ENTER" Button**. Select and *activate* either of the ">>" *Mini-Icons* to view the next or previous Adjustment in this group. Select and *activate* either of the "-" or "+" *Mini-Icons* to change the setting, if desired *(the Default Setting is noted in the definitions below)*. The display will describe the **Adjustment Number**, **Adjustment Name** and the **Current Adjustment Setting**. The current Adjustment will remain in the display until the next Adjustment is view or when this Menu is exited.

WARNING: Changes made in any Adjustments will be lost after a FACTORY RESET or removal of the CPU/Sound Board Batteries.

Nr.	STANDARD ADJUSTMENT NAME: Definition
01	**REPLAY TYPE:** Set to **AUTO**, **DYNAMIC**, **FIXED** or **NONE**. Default is **AUTO**. Selecting **NONE** will make Standard Adjustments **2-5** ***NOT AVAILABLE***. Selecting **FIXED** will make Standard Adjustment **2** ***NOT AVAILABLE***. If selected **AUTO**, **DYNAMIC** or **FIXED**, you will need to then select the number of Replay Levels and Score Threshold *(in Standard Adj. **4**)* desired for the player to receive a Replay Award *(select type in Standard Adj. **3**)*. The Default Score appears as a starting point after the Level amount is selected. **AUTO** & **DYNAMIC** will then get based on the Replay Percentage *(in Standard Adjustment **2**)*. • Select **FIXED** to give the player a Replay Award as the Score Threshold is reached. This Score Threshold ***will not*** adjust up or down. • Select **AUTO** to give the player a Replay Award as the Score Threshold is reached. This Score Threshold will automatically adjust up or down based on the Replay Percentage chosen *(in Std. Adj. **2**)*. The game periodically adjusts based upon the Player Base Skill Level. • Select **DYNAMIC** to give the player a Replay Award as the Score Threshold is reached. This Score Threshold will go down every game based on the Replay Percentage selected. *For (Dynamic) example, if the Score Threshold is 50,000,00 and the Replay Percentage selected is 10%, every game a player does not reach the Score Threshold, the score to reach will drop by 5,000,000 (10% of 50M). This will continue every game until the Threshold Score is reached. Thus, if the score then drops to 15,000,000 after 7 games and is then achieved, the Replay Award is given. The original Score Threshold is added to 15,000,000 and is now 65,000,000. It will then take the same player 10 games to reach 15,000,000.*
02	**REPLAY PERCENTAGE:** Set between **01% - 50**. Default is **10%**. This Adjustment is required if Standard Adjustment **1** is set to **AUTO** or **DYNAMIC**.

Standard Adjustments 03-11 continued on the next page.

STANDARD ADJUSTMENT NAME: Definition

03 **REPLAY AWARD:** Set to **EXTRA BALL**, **CREDIT**, **TICKET*** or **TOKEN***. Default is **CREDIT**. Select **EXTRA BALL** if awarding a ***CREDIT***, ***TICKET/TOKEN*** is prohibited in your area.

If TICKET or TOKEN is selected, the game will require an optional Ticket or Token Dispenser
If selected Token, then Standard Ajustment 46, Q24 Option, must be changed accordingly.

04 **REPLAY LEVELS:** Set between **1 - 4** for the number of Replay Levels to be active. Default is **1: 20,000,00**. A "Drop-Down" Table appears showing Replay Level 1. Adjust the Replay Level between 10M - 9.99B *(Default Score appears as a starting point)* using the "-" or "+" *Mini-Icons*, then use the *">>" Mini-Icon* to go to next Level *(if selected more than 1)* and select the next highest Threshold Score(s) desired.

05 **REPLAY BOOST:** Set to **YES** or **NO**. Default is **YES**. *This Adjustment works only when Standard Adjustment **1**, **Replay Type**, is set to **FIXED** or **AUTO**.*

When set to **YES**, while **FIXED** or **AUTO** maintains the Replay Levels, Replay Boost works as follows: If the Replay Level is 7,000,000 *(regardless of the Replay Percentage)*, and the Player scores 20M, and receives the Replay Award, the next game the Current Replay Level is added to this base. Thus the next game, the Replay Level is 14,000,000. The Player agains scores 20M. The next game the Player will need to achieve 21,000,00 to earn the Replay Award. If the Player does not achieve 21,000,000, the next game reverts back to the original 7,000,000 or the new adjusted level maintained by the Fixed or Autopercentaging Feature.

06 **SPECIAL AWARD:** Set to **EXTRA BALL**, **CREDIT**, **TICKET***, **TOKEN*** or **POINTS**. Default is **CREDIT**. Select **EXTRA BALL** or **POINTS** if awarding a ***CREDIT*** or ***TICKET/TOKEN*** is prohibited in your area.

07 **SPECIAL PERCENTAGE:** Set between **1% - 5%**. Default is **0%**. This adjustment allows the operator to adjust how frequently the ***Special Feature*** is made available to the player.

08 **FREE GAME LIMIT:** Set between **01 - 09**, **NO FREE GAMES** or **UNLIMITED**. Default is **05**. Set the maximum number of *Free Games* that may be accumulated per game.

09 **EXTRA BALL LIMIT:** Set between **01 - 09**, **NO EXTRA BALLS** or **UNLIMITED**. Default is **09**. Set the number of *Extra Balls* that may be accumulated per game.

10 **EXTRA BALL PERCENTAGE:** Set between **01% - 50%**. Default is **25%**. This adjustment allows the operator to adjust how frequently the ***Extra Ball Feature*** is made available to the player.

11 **GAME PRICING:** There are two (2) methods available for *Coin Switch Programming*: **Standard** & **Custom**. Set between **USA 1** thru **EURO 12** or **CUSTOM**. *USA Factory Default Setting* is **USA 5**.

USA Standard Pricing Select Table

CPU/SOUND BOARD DIP SWITCH 300 SETTING	COUNTRY SETTING OPTION(S)	COIN MECHANISMS (SWITCHES) COINS THRU ... SLOT: LEFT	CENTER	RIGHT	4TH	PRICING SCHEME Number of Plays (Credits) for Price Amount Shown See "Appendix J" for Coin Cards Examples & Info!			Requires SPI Coin Card(s) Part Number
Pos. 1 2 3 4 5 6 7 8	Alternate Settings								
ON	USA 1					1 /$ .25			755-5400-01-Y
OFF ▼▼▼▼▼▼▼▼	USA 2					1 /$ .50	2 /$ .75	3 /$1.00	755-5400-02-Y
	USA 3					1 /$ .50			755-5400-02-Y
	USA 4					1 /$ .50	*For USA Defaults 6 & 7 use:*		755-5400-02-Y
	USA 5 »	$.25	$1.00	$.25		» 1 /$ .50	5 /$2.00	**755-5400-02**	755-5400-00-Y
	USA 6					1 /$ .50	2 /'4 X 25¢'	3 /$1.00 Bill	◀ Used to promote the Bill Validator.
	USA 7					1 /$ .50	4 /$1.50	6 /$2.00	
	USA 8					1 /$ .50	3 /$1.00		755-5400-00-Y
	USA 9					1 /$1.00			755-5400-07-Y

The **Dip Switch Settings (Sw. 300)** on the **CPU/Sound Board** for each Country ***must match*** *with what is shown in the **USA & Int'l. Standard Pricing Select Tables** for your country to have correct operation (see the next page)*. For a **Standard** Selection *(**USA** or **International**)*: Select & *activate* either of the "-" or "+" *Mini-Icons* to move backward or forward in the Display; With your choice appearing in the display, select & *activate* the ">>" *Mini-Icon* to advance and "lock-in" the change *(display will momentarily flash **REQUEST INSTALLED**)*.

If **CUSTOM** is selected *(appears in display)*, after selecting & *activating* any *Mini-Icon (except for "-" or "+")*, the display will momentarily flash **REQUEST INSTALLED** with the display "**LEFT COIN: 0 PULSE**" appearing. Use the "<<" or ">>" *Mini-Icons* to ***select*** the next choice *(see Table Examples below)* and the "-" or "+" *Mini-Icons* to ***customize*** the PULSES, CREDITS & CLICKS from **0** to **99**.

The prescribed number of **PULSES** required for **1 CREDIT** must be set according to the ***Pricing Scheme*** *desired*. Some simple calculations are required to get the proper set-up. After customizing, ***test*** *the set-up* with appropriate Coins or Bills and adjust, if necessary. ***Note:*** *Clicks can be changed if an optional Coin Meter is installed.*

Examples :

In **Example 1**, note the **LEFT** (and **RIGHT**) **COIN: 3 PULSES** and **ONE CREDIT: 4 PULSES**. Since every Coin inserted produces 3 Pulses & every Credit requires 4 Pulses, 2 Coins (50¢) will produce 6 Pulses *(4 Pulses for the 1st Credit + 2 Pulses remains in escrow)*. The 3rd Coin (75¢) provides another 3 Pulses for a total of 5 Pulses *(4 Pulses for the 2nd Credit + 1 Pulse remains in es crow)*. The 4th Coin ($1.00) provides another 3 Pulses for a total of 4 Pulses *(4 Pulses for the 3rd Credit + 0 Pulses remain)*. The **CENTER COIN: 12 PULSES** is set this way *(with a Bill Validator attached)*; every $1-Bill inserted produces 12 Pulses or 3 Credits.

LEFT	CENTER	RIGHT	4TH	Example 1			LEFT COIN:	CENTER COIN:	RIGHT COIN:	FOURTH COIN:	ONE CREDIT:	BONUS 1:	BONUS 2:	BONUS 1:	BONUS 2:	LEFT COIN:	CENTER COIN:	RIGHT COIN:	FOURTH COIN:
25¢	$1.00	25¢	Not Used	1 /50¢	2 /75¢	3/ $1.00	3	12	3	1	4	0	0	0	0	1	4	1	1
Coin Mechanisms Used				Pricing Scheme Desired			PULSES	PULSES	PULSES	PULSE	PULSES	PULSES	PULSES	CREDITS	CREDITS	CLICK	CLICKS	CLICK	CLICK

Standard Adjustment 11, Custom Pricing, continued on the next page.

STANDARD ADJUSTMENT NAME: Definition

In **Example 2**, *similar to Example 1*, however, **BONUS CREDITS** are implemented. In addition to receiving 3 plays for every $1.00, the player is awarded an extra Credit for every 2nd dollar inserted before game start.

LEFT	CENTER	RIGHT	4TH	Example 2			LEFT COIN:	CENTER COIN:	RIGHT COIN:	FOURTH COIN:	ONE CREDIT:	BONUS 1:	BONUS 2:	BONUS 1:	BONUS 2:	LEFT COIN:	CENTER COIN:	RIGHT COIN:	FOURTH COIN:
25¢	$1.00	25¢	Not Used	1 /50¢	2 /75¢	7/ $2.00	3	12	3	1	4	**24**	0	**1**	0	1	4	1	1
Coin Mechanisms Used				**Pricing Scheme Desired**			PULSES	PULSES	PULSES	PULSE	PULSES	PULSES	PULSES	CREDIT	CREDITS	CLICK	CLICKS	CLICK	CLICK

In **Example 3**, a ***Pricing Scheme*** for a cheaper game is shown. An extra Pulse is put in escrow for every 25¢, thus at 4X 25¢ inserted, another Credit is given, and the **BONUS 1: 20 PULSES** threshold is also met, so 6/ $1.00 is achieved. **BONUS 2: 40 PULSES** is set, so when this threshold is met with $2.00, 13 Credits are produced.

LEFT	CENTER	RIGHT	4TH	Example 3			LEFT COIN:	CENTER COIN:	RIGHT COIN:	FOURTH COIN:	ONE CREDIT:	BONUS 1:	BONUS 2:	BONUS 1:	BONUS 2:	LEFT COIN:	CENTER COIN:	RIGHT COIN:	FOURTH COIN:
25¢	$1.00	25¢	Not Used	1 /25¢	6/ $1.00	13/ $2.00	**5**	**20**	**5**	**0**	**4**	**20**	**40**	1	0	1	4	1	1
Coin Mechanisms Used				**Pricing Scheme Desired**			PULSES	PULSES	PULSES	PULSES	PULSES	PULSES	PULSES	CREDIT	CREDITS	CLICK	CLICKS	CLICK	CLICK

In **Example 4**, a ***Pricing Scheme*** using a different currency *(i.e. British Sterling)* is shown to provide another way coins *(or tokens)* can be utilized to custom tailor to your own needs.

LEFT	CENTER	RIGHT	4TH	Example 4			LEFT COIN:	CENTER COIN:	RIGHT COIN:	FOURTH COIN:	ONE CREDIT:	BONUS 1:	BONUS 2:	BONUS 1:	BONUS 2:	LEFT COIN:	CENTER COIN:	RIGHT COIN:	FOURTH COIN:
10p	50p	£1	20p	1 /30p	2 /50p	5 /£1	**1**	**6**	**15**	**2**	**3**	0	0	0	0	1	4	1	1
Coin Mechanisms Used				**Pricing Scheme Desired**			PULSE	PULSES	PULSES	PULSES	PULSES	PULSES	PULSES	CREDITS	CREDITS	CLICK	CLICKS	CLICK	CLICK

International (non-Euro) Standard Pricing Select Table

CPU/SOUND BOARD DIP SWITCH 300 SETTING	COUNTRY SETTING OPTION(S)	COIN MECHANISMS (SWITCHES) COINS THRU ... SLOT: LEFT	CENTER	RIGHT	4TH	PRICING SCHEME Number of Plays (Credits) for Price Amount Shown See "Appendix J" for Coin Cards Examples & Info!			Requires SPI Coin Card(s) Part Number
Pos. 1 2 3 4 5 6 7 8 ON ▲ ▲ ▲ OFF ▼ ▼ ▼ ▼ ▼	**Australia 1** «	20¢	$A1	$A2		» 1 /$A1	3 /$A2		755-5406-00-Y (Side 1)
	Australia 2					1 /$A1			
Pos. 1 2 3 4 5 6 7 8 ON ▲ ▲ OFF ▼ ▼ ▼ ▼ ▼	**Canada**	Can$.25	Can$.25	Can$1	Can$2	1 /50¢	2 /75¢	3/ Can$1	755-5400-00-Y -01-Y *or* -02-Y
Pos. 1 2 3 4 5 6 7 8 ON ▲ ▲ ▲ OFF ▼ ▼ ▼ ▼	**Croatia**	1 kuna	2 kuna	5 kuna		1 /3 kuna	2 /5 kuna		755-5410-00-Y (2-Sided)
Pos. 1 2 3 4 5 6 7 8 ON ▲ ▲ OFF ▼ ▼ ▼ ▼ ▼	**Denmark 1** «	1 DKr	5 DKr	10 DKr	20 DKr	» 1 /3 DKr	2 /5 DKr		755-5402-00-Y (2-Sided)
	Denmark 2					1 /2 DKr	3 /5 DKr	7 /10 DKr	
Pos. 1 2 3 4 5 6 7 8 ON ▲ ▲ ▲ OFF ▼ ▼ ▼ ▼	Japan 1	100¥		100¥		1 /100¥			755-5408-01-Y (2-Sided)
	Japan 2 «					» 1 /100¥	3 /200¥		
Pos. 1 2 3 4 5 6 7 8 ON ▲ ▲ ▲ ▲ OFF ▼ ▼ ▼ ▼	**Middle East**	token		token		1 /1 token			755-5400-06-Y (use Side 1)
Pos. 1 2 3 4 5 6 7 8 ON ▲ OFF ▼ ▼ ▼ ▼ ▼ ▼ ▼	**New Zealand 1** «	$NZ1		$NZ2		» 1 /$NZ1			755-5406-00-Y (Side 2)
	New Zealand 2					1 /$NZ1	3 /$NZ2		
Pos. 1 2 3 4 5 6 7 8 ON ▲ ▲ OFF ▼ ▼ ▼ ▼ ▼	**Norway 1** «	10 NKr	5 NKr	20 NKr		» 1 /10 NKr			755-5403-01-Y (2-Sided)
	Norway 2					1 /10 NKr	3 /20 NKr		
Pos. 1 2 3 4 5 6 7 8 ON ▲ ▲ ▲ OFF ▼ ▼ ▼ ▼ ▼	**Russia**	10 Ruble	5 Ruble	1 Ruble		1 /5 Rubles	***Note:*** *Left Switch can be wired to Bill Acceptor*		755-5411-00-Y (2-Sided)
Pos. 1 2 3 4 5 6 7 8 ON ▲ ▲ OFF ▼ ▼ ▼ ▼ ▼	**South Africa**	50c	R1	R2	R5	1 /R2			755-5409-01-Y (2-Sided)
Pos. 1 2 3 4 5 6 7 8 ON ▲ ▲ ▲ OFF ▼ ▼ ▼ ▼ ▼	**Sweden 1** «	1 SKr	5 SKr	10 SKr		» 1 /10 SKr	2 /15 SKr	3 /20 SKr	755-5404-00-Y (2-Sided)
	Sweden 2					1 /5 SKr			
Pos. 1 2 3 4 5 6 7 8 ON ▲ ▲ OFF ▼ ▼ ▼ ▼ ▼ ▼ ▼	**Taiwan**	TWD10		TWD10		1 /TWD10			755-5412-00-Y (used Side 1)
Pos. 1 2 3 4 5 6 7 8 ON ▲ ▲ ▲ OFF ▼ ▼ ▼ ▼ ▼	**Switzerland 1** «	1 SwF	2 SwF	5 SwF		» 1 /1 SwF	6 /5 SwF		755-5405-00-Y (2-Sided)
	Switzerland 2					1 /1 SwF	3 /2 SwF	9 /5 SwF	
Pos. 1 2 3 4 5 6 7 8 ON ▲ ▲ ▲ OFF ▼ ▼ ▼ ▼ ▼		LEFT	CENTER	RIGHT	4TH	5TH	UK also utilizes the 5th Coin Slot Switch (not available with Custom Pricing).		
	UK 1	10p	50p	£1	20p	£2	3 /£1	7 /£2	755-5407-00-Y
	UK 2						4 /£1		755-5407-01-Y*
	UK 3						1 /50p	5 /£2	755-5407-01
	UK 4						1 /30p	4 /£1	755-5407-01-Y*
	UK 5 «					»	1 /£1	3 /£2	755-5407-01
	UK 6						3 /£2	*use blank side	755-5407-01-Y*

Note: *The Country Setting Option above noted with "«" & "»" denotes the Factory Default Setting (subject to change).*

Standard Adjustment 11, Custom Pricing, and Std. Adj. 12-17 continued on the next page.

STANDARD ADJUSTMENT NAME: Definition

Euro 1-12 Summary & International (Euro) Standard Pricing Select Table

CPU/SOUND BOARD DIP SWITCH 300 SETTING	COUNTRY SETTING OPTION(S)	COIN MECHANISMS (SWITCHES) COINS THRU ... SLOT: LEFT	CENTER	RIGHT	4TH	PRICING SCHEME Number of Plays (Credits) for Price Amount Shown See "Appendix J" for Coin Cards Examples & Info!			Requires SPI Coin Card(s) Part Number
Pos. 1 2 3 4 5 6 7 8									
ON S E E B E L O W	Euro 1	€.50	€1.00	€2.00	optional €.20 optional	1 /€.50			755-5401-01-Y
OFF S E T T I N G S	Euro 2					1 /€.50	5 /€2.00		755-5401-02-Y
	Euro 3					1 /€.50	3 /€1.00		755-5401-03-Y
	Euro 4					1 /€.50	6 /€2.00		755-5401-04-Y
	Euro 5					1 /€.50	3 /€1.00	7 /€2.00	755-5401-05-Y
	Euro 6					2 /€.50			755-5401-06-Y
	Euro 7					1 /€1.00	5 /€4.00		755-5401-07-Y
	Euro 8					1 /€1.00	3 /€2.00		755-5401-08-Y
	Euro 9					1 /€1.00	2 /€1.50	3 /€2.00	755-5401-09-Y
	Euro 10					1 /€1.00	3 /€2.00	7 /€3.00	755-5401-10-Y
	Euro 11					1 /€1.00	4 /€2.00		755-5401-11-Y
	Euro 12					2 /€1.00	9 /€4.00		755-5401-12-Y

Euro 1-12 are alternate settings for countries using the Euro:

If choosing an alternate Euro Setting other than your Country's Default, please remember to use your Country Dip Switch Setting.

*For a different **Euro Pricing Scheme** (other than below default), scroll through **Standard Adjustment 11**: Euro 1-12 or CUSTOM* for new setting (reference above Euro 1-12 Summary). * **Note**: Unique Coin Door & Mech. for Germany, Italy & Portugal must use CUSTOM.*

Pos. 1 2 3 4 5 6 7 8									
ON ▲	Austria Euro 9	€.50	€1.00	€2.00		1 /€1.00	2 /€1.50	3 /€2.00	755-5401-09-Y
OFF ▼ ▼ ▼ ▼ ▼ ▼ ▼									
Pos. 1 2 3 4 5 6 7 8									
ON ▲	Belgium Euro 1	€.50	€1.00	€2.00		1 /€.50			755-5401-01-Y
OFF ▼ ▼ ▼ ▼ ▼ ▼ ▼									
Pos. 1 2 3 4 5 6 7 8									
ON ▲ ▲	Finland Euro 8	€.50	€1.00	€2.00		1 /€1.00	3 /€2.00		755-5401-08-Y
OFF ▼ ▼ ▼ ▼ ▼ ▼ ▼									
Pos. 1 2 3 4 5 6 7 8									
ON ▲ ▲	France Euro 10	0,50 €	1,00 €	2,00 €		1 /1,00 €	3 /2,00 €	7 /3,00 €	755-5401-10-Y
OFF ▼ ▼ ▼ ▼ ▼ ▼ ▼									
Pos. 1 2 3 4 5 6 7 8									
ON ▲ ▲ ▲	Germany 1					1 /0,50¢			755-5401-01-Y
OFF ▼ ▼ ▼ ▼ ▼ ▼ ▼	**Germany 2** «	€0,50	€1,00	€2,00	»	1 /0,50¢	5 /€2,00		-02-Y *or* -04-Y
	Germany 3					1 /0,50¢	6 /€2,00		
Pos. 1 2 3 4 5 6 7 8									
ON ▲ ▲ ▲ ▲	Greece Euro 6	€.50	€1.00	€2.00		2 /€.50			755-5401-06-Y
OFF ▼ ▼ ▼ ▼									
Pos. 1 2 3 4 5 6 7 8									
ON ▲	**Italy 1** «	€.50		€.50	»	1 /.50¢			755-5401-01-Y
OFF ▼ ▼ ▼ ▼ ▼ ▼ ▼	Italy 2					1 /€1.00	3 /€2.00		*or* -08-Y
Pos. 1 2 3 4 5 6 7 8									
ON ▲	Netherlands Euro 3	€.50	€1.00	€2.00		1 /€.50	3 /€1.00		755-5401-03-Y
OFF ▼ ▼ ▼ ▼ ▼ ▼ ▼									
Pos. 1 2 3 4 5 6 7 8									
ON ▲ ▲	**Portugal**	€.50		€.50		1 /€.50			755-5401-01-Y
OFF ▼ ▼ ▼ ▼ ▼ ▼									
Pos. 1 2 3 4 5 6 7 8									
ON ▲ ▲	Spain Euro 3	€.50	€1.00	€2.00		1 /€.50	3 /€1.00		755-5401-03-Y
OFF ▼ ▼ ▼ ▼ ▼ ▼ ▼									

***Note:** The Country Setting Option above noted with "«" & "»" denotes the Factory Default Setting (subject to change).*

12 MATCH AWARD: Set to **CREDIT**, **TICKET*** or **TOKEN***. Default is **CREDIT**.

If TICKET or TOKEN is selected, the game will require an optional Ticket or Token Dispenser
If selected Token, then Standard Ajustment 46, Q24 Option, must be changed accordingly.

13 MATCH PERCENTAGE: Set between **0% - 10%** or **OFF**. Default is **9%**. At **0**% the match display occurs at the end of the game but never awards a Credit. Set to **OFF**, no ***Match Animation Feature*** is shown.

14 BALLS PER GAME: Set between **02 - 10**. Default is **03**. Set the number of balls per game.

15 TILT WARNINGS: Set to **00**, **01** or **03**. Default is **01**. Set the number of Plumb Bob Tilt Switch closures before the ball in play is tilted.

16 CREDIT LIMIT: Set between **04 - 50**. Default is **30**. Set the maximum credits allowed.

17 ALLOW HIGH SCORES: Set to **YES** or **NO**. Default is **YES**. When set to **YES** if a player exceeds any 1 of the 4 High Scores, the player may receive an award *(depending on Standard Adjustment **03, Replay Award**)*. Set to **NO** to disable this feature. There are 5 High Scores that will allow the player to enter their initials *(or name) (see Standard Adjustment **29, High Score Initials**)*.

Standard Adjustments 18-38 continued on the next page.

	STANDARD ADJUSTMENT NAME: Definition
18	**GRAND CHAMPION AWARDS:** Set between **00 - 05**. Default is **01**. Set the number of awards, awarded for exceeding Level 1 *(the highest of the five (5) Levels).*
19	**HIGH SCORE #1 AWARDS:** Set between **00 - 03**. Default is **01**. Set the number of awards, awarded for exceeding Level 2.
20	**HIGH SCORE #2 AWARDS:** Set between **00 - 02**. Default is **00**. Set the number of awards, awarded for exceeding Level 3.
21	**HIGH SCORE #3 AWARDS:** Set between **00 - 01**. Default is **00**. Set the number of awards, awarded for exceeding Level 4.
22	**HIGH SCORE #4 AWARDS:** Set between **00 - 01**. Default is **00**. Set the number of awards, awarded for exceeding Level 5.
23	**GRAND CHAMPION SCORE:** Set between **1,000,000 - 9,999,000,000** or **00** *(increments of 1M).* Default is **100,000,000**. Set the desired ***High Score Level*** to which Level 1 may be achieved. A score higher than the default, cannot be reset by Standard Adjustment **28**, **HSTD Reset Count**. *The High Score will revert to the Default Score **ONLY** if a **Factory Reset** is done or the batteries are removed from the CPU/Snd. Bd.*
24	**DEFAULT HIGH SCORE #1:** Set between **1,000,000 - 9,999,000,000** or **00** *(increments of 1M).* Default is **65,000,000**. Set the desired ***High Score Level*** to which Level 2 may be achieved. *Read Std. Adj. **28**.*
25	**DEFAULT HIGH SCORE #2:** Set between **1,000,000 - 9,999,000,000** or **00** *(increments of 1M).* Default is **55,000,000**. Set the desired ***High Score Level*** to which Level 3 may be achieved. *Read Std. Adj. **28**.*
26	**DEFAULT HIGH SCORE #3:** Set between **1,000,000 - 9,999,000,000** or **00** *(increments of 1M).* Default is **50,000,000**. Set the desired ***High Score Level*** to which Level 4 may be achieved. *Read Std. Adj. **28**.*
27	**DEFAULT HIGH SCORE #4:** Set between **1,000,000 - 9,999,000,000** or **00** *(increments of 1M).* Default is **45,000,000**. Set the desired ***High Score Level*** to which Level 5 may be achieved. *Read Std. Adj. **28**.*
28	**HSTD RESET COUNT:** Set between **100 - 9,900** or **OFF** *(increments of 100).* Default is **2,000**. **HSTD** *(**H**igh **S**core **T**o **D**ate).* Set the number of games between "automatic resets of High Score Levels" to "Default Scores" for ***ONLY*** Standard Adj. **24-27, Default High Score #1-#4**.
29	**HIGH SCORE INITIALS:** Set to **3 INITIALS** or **10 LETTER**. Default is **3 INITIALS**. When set to **3 INITIALS**, the player is allowed only 3 initials to input. When set to **10 LETTER NAME**, the player is allowed to enter 10 initials to input.
30	**FREE PLAY:** Set to **YES** or **NO**. Default is **NO**. When set to **YES**, no coins are required for *Game Play.*
31	**CUSTOM MESSAGE:** Set to **ON, CHANGE** or **OFF**. Default is **ON**. When set to **CHANGE**, a new message can be set or the old one can be edited *(select the "+" Mini-Icon to change settings until "CHANGE" appears in the display, then select the ">>" Mini-Icon to access.).* This adjustment can be accessed in two (2) ways by either selecting the "S.P.I." *Icon* and advancing to this Adjustment, **or** can be directly accessed by selecting the "ABCD CUST MSG" *Icon* in the **ADJUSTMENTS MENU**. *View the Custom Message Shortcut summary (end of this chapter) for how to enter text or symbols.*
32	**FLASH LAMP POWER:** Set to **NORMAL**, **DIM** or **OFF**. Default is **NORMAL**. When set to **DIM**, the Flash Lamps impulse power is reduced by **25**% and when set to **OFF** the Flash Lamps will not flash.
33	**COIL PULSE POWER:** Set to **NORMAL, HARD** or **SOFT**. Default is **NORMAL**. When set to **HARD**, the coil pulse power is ***increased*** by **12.5**% of the normal pulse rate. When set to **SOFT** the coil pulse power is ***decreased*** by **12.5**% of the normal pulse rate. This adj. is provided to compensate for *Low Line* or *High Line voltage* conditions where the solenoids (coils) appear to *kicking too weak or too hard*. Adjust as required.
34	**KNOCKER VOLUME:** Set to **NORMAL, LOW** or **OFF**. Default is **NORMAL**. When set to **LOW**, the volume is decreased 50%. When set to **OFF**, no sound is heard when the "knocker" is sounded.
35	**GAME RESTART:** Set to **YES** or **NO**. Default is **YES**. When set to **YES**, a new game may be started during any ball after the first ball is completed *(if credits are available).* Pressing the **Start Button** during the first ball will add additional players. When set to **NO**, the game disables the **Start Button** after the first ball until the final ball is in play. *Review Sec. **2**, Chp. **1**, **GAME OPERATIONS & FEATURES**, for details.*
36	**BILL VALIDATOR:** Set to **YES** or **NO**. Default is **NO**. When set to **YES**, in *Game Attract Mode* the Display will show an "*Insert Bill Animation*." When set to **NO,** the Display will show an "*Insert Coin Animation*."
37	**BKGRND (BACKGROUND) MUSIC VOLUME:** Set between **01** - **15**. Default is **01**. After volume is set via Portals Service Buttons *(see Section **3**, Chapter **1**, **PORTALS™ SERVICE MENU INTRODUCTION**)* this adjustment can be utilized to adjust the background music *(1 all the way on, 15 all the way off)* while keeping the Special Sound FX the same level.
38	**FREEZE TIME (BALL SAVE):** Set to **OFF**, **0:01-0:15** or **AUTO**. Default is **0:09**. When set to **OFF** this feature is unavailable. Set between **0:01** through **0:15** *(single increments)* for the ball to be sent back into play if the time set is not met *(per ball).* Set to **AUTO** to automatically adjust the Freeze Timer based on the average ball time.

Standard Adjustments 39-52 continued on the next page.

	STANDARD ADJUSTMENT NAME: Definition
	UK ONLY ***Dip Switch Must Be Set***
39	**UK POST SAVE ENABLED:** Set to **YES** or **NO**. Default is **NO**, *(UK Default is **YES**).* When set to **YES** this feature is available when lit. Set to **NO** to disable this feature. *(UK Games have Outlane/Center Post Save Devices which are accessed in differently; Non-UK Games cannot adjust this setting.)*
40	**TIMED PLUNGER:** Set to **OFF** or **0:15 - 1:00**. Default is **OFF**. When set to **0:15** to **1:00**, the plunger will "Autoplunge" the ball *(at the time set)* when the ball is at the beginning of play, awaiting the skill shot by the player.
41	**FLIPPER BALL LAUNCH:** Set to **DISABLED**, **LEFT FLIPPER**, **RIGHT FLIPPER**, **EITHER FLIPPER** or **BOTH FLIPPERS**. Default is **DISABLED**. This feature allows the player to operate the *Auto Ball Launch* with the **FLIPPER BUTTON(S)** depending on which setting is chosen.
42	**COINDOOR BALL SAVER:** Set to **YES** or **NO**. Default is **NO**. When set to **NO**, this feature is not available. When set to **YES**, this feature allows the **Coin Door** to be opened during game play; the ball will drain but the game will be placed "on hold". When the **Coin Door** is closed, the pinball will return to the Shooter Lane, and the game will resume.
43	**COMPETITION MODE:** Set to **YES** or **NO**. Default is **NO**. When set to **NO**, this feature is not available. If an **Install** of either **$.50** or **Free Play Comp.** was made *(changing default to **YES**),* and was changed back to **NO**, the **COMPETITION MODE** will be turned **OFF** *(see Sec. **3**, Chp. **5**, **GO TO INSTALLS MENU**, **$. 50** or **Free Play Competition**).* Set to **YES**, this feature is available *(required for Competition Modes)*; this feature will equalize random game features and global score values during multi-player games.
44	**CONSOLATION BALL:** Set to **YES** or **NO**. Default is **NO**. When set to **YES**, the ***EXTRA BALL*** *(Playfield Light Insert, location varies)* will be lit on the last ball in play, if certain programming criteria is met.
45	**FAST BOOT:** Set to **YES** or **NO**. Default is **YES**. When set to **NO** *or if you hold the RIGHT Flipper Button during Power-Up*, this feature is not available and will display all normal Power-Up screens. When set to **YES**, the game will not display the normal informative Power-Up screens, specifically the CPU Version screen and the Location/Game ID screen. Regardless of the setting, normal Power-Up safety checks are still performed.
46	**Q24 OPTION:** Set to **COIN METER**, **TOKEN DISPENSER** or **KNOCKER**. Default is **COIN METER**. This Coil (Solenoid) Location is left "open" at the Factory to allow for these optional Mechanisms to be added to the game. If selecting **TOKEN DISPENSER**, Standard Adjustments 03, 06 & 12 should be changed to **TOKEN**. *Call Technical Support at 1-800-542-5377 if more information is required on this option.*
47	**TICKET DISP. INSTALLED:** Set to **YES** or **NO**. Default is **NO**. *This adjustment is required only for games which have an optional Deltronics (DL-1275-2 PCB Style, SPI Part Nr. 515-7275-00) Ticket Dispenser installed. Unique CPU Sound Bd. Dip Switch (Sw. 300) Setting required, changes the Default to **YES**.*
48	**ALLOW PLAYER COMP. MODE:** Set to **YES** or **NO**. Default is **YES**. ***Competition Mode*** unrandomizes feature events, and standardizes game play and rule sets *(varies from game to game)* for fair competitions. With adequate credit, to enter ***Competition Mode***, hold the **Flipper Button** in while pressing the **Start Button**. ***Watch the Dot Display for more details*** *(rules and operation are subject to change).* General rules are covered in the Instruction Card. Other *Hints and/or Rules* can be made known on this game either visually *(the Dot Display or Flashing Light Inserts)* or can be audible.
49	**TECH ALERT WARNING:** A Portals™ Function. *Review Sec. **3**, Chp. **2**, **GO TO DIAGNOSTICS MENU**, Page **25**, regarding **Technician Alerts** and its' functions.* Set to **NEVER**, **POWERUP**, **COIN DOOR** or **POWERUP AND COIN DOOR**. Default is **NEVER**. When set to **NEVER**, the Tech Report Alert display will not appear upon Power-Up or opening the Coin Door, if the game detects any problems. When set to **POWERUP**, the display will appear only upon Power-Up *(if problems detected).* When set to **COIN DOOR**, the display will appear only when the Coin Door is opened *(if problems detected).* When set to **POWERUP AND COIN DOOR**, the display will appear upon Power-Up and if the Coin Door is opened *(if problems detected).*
50	**TEAM SCORES:** Set to **YES** or **NO**. Default is **NO**. Set to **YES**, then Team Play will be made available. ***Team Play only works in a 4-Player Game.*** The totals for Players 1 / 3 (Team 1) & Players 2 / 4 (Team 2) are then displayed individually ***as well as*** the combined score for **BOTH TEAMS** to enable **Team Play (Doubles)**. *See Section **2**, Chapter **1**, **Game Operation & Features**, for non-adjustable Features.*
51	**LOCATION ID:** Set between **00** to **9999**. Default is **00**. This adjustment allows thxe operator to assign a location identification number to the audit print-out sheet. *(Will not be affected by Factory Reset.)*
52	**GAME ID:** Set between **00** to **9999**. Default is **00**. This adjustment allows the operator to assign a game identification number to the audit print-out sheet. *(Will not be affected by Factory Reset.)*
53	**FLIPPER ADJ 1:** Set between **05** to **40**. Default is **20**. This adjustment sets the ***minimum*** fire time for a flipper coil in milliseconds.
54	**FLIPPER ADJ 2:** Set between **40** to **60**. Default is **50**. This adjustment sets the ***maximum*** fire time for a flipper coil in milliseconds.

Standard Adjustment 55 continued on the next page.

	STANDARD ADJUSTMENT NAME: Definition
55	**FLIPPER ADJ 3:** Set between **0** to **10**. Default is **3**. This adjustment sets the amount of time to fire the coil ***after the EOS switch is seen*** in milliseconds.

Standard Adjustments 53-55 Note: *• Flippers will now fire when the button is pushed until the End-of-Stroke (EOS) Switch closure is seen. When EOS is seen, continue firing for the amount of time in Std. Adj. 55. When this time is expired, if the minimum time has not yet been met (Std. Adj. 53), then keep firing until it has. Otherwise switch to hold power. • If the flipper has been firing and it reaches the maximum (Std. Adj. 54), then switch to hold power. • If the flipper caves-in (EOS re-closes) while the button is still held, then refire the flipper at full power. Switch to hold power as soon as EOS is seen, no minimum times are enforced in this situation. • If the flipper caves in several times on the same single flipper button press, then stop refiring at full power and just stay at hold. • If the flipper fails to open the EOS switch several times, then assume it isn't working and fall back to a "safe" fire time so as not to burn up the coil.*

Feature Adjustments (01-35)

To initiate, from the **ADJUSTMENTS MENU**, select the "NASC" *Icon* with either the **Red "LEFT"** or **Green "RIGHT" Buttons** and press the **Black "ENTER" Button**. Select and *activate* either of the ">>" *Mini-Icon*s to view the next or previous Adjustment in this group. Select and *activate* either of the "-" or "+" *Mini-Icons* to change the setting, if desired *(the Default Setting is noted in the definitions below)*. The display will describe the **Adjustment Number**, **Adjustment Name** and the **Current Adjustment Setting**. The current Adjustment will remain in the display until the next Adjustment is view or when this Menu is exited.

********** ***Variables, Game Play, Rules, Settings and Explanation Subject to Change*** **********

Nr.	FEATURE ADJUSTMENT NAME: Definition
01	**BONUS CARRYOVER :** Set to **YES** or **NO**. Default is **NO**. Decides if the bonus X should be carried over from ball to ball. DIFFICULTY: YES/YES/NO/NO/NO (EXTRA EASY TO EXTRA HARD)
02	**POPS LIT GAME START :** Set between **01** to **05**. Default is **02**. Sets the number of pop bumpers that will be lit at game start. Choosing 4 will light 2 solid and set 1 blinking, choosing 5 will light 1 solid and set 2 blinking. DIFFICULTY: 3/2/2/1/0
03	**EXTRA BALL MEMORY :** Set to **YES** or **NO**. Default is **NO**. Allows the EXTRA BALL lit from the Garage Award to carry over. DIFFICULTY: YES/YES/YES/NO/NO
04	**CAR START POSITION :** Set between **03** to **10**. Default is **08**. Chooses the starting position when the player begins the game. DIFF: 4/6/8/10/10
05	**GARAGE READY HITS :** Set between **01** to **03**. Default is **02**. Chooses how many hits to the TEST CAR are needed to light the Garage Award. DIFF: 1/1/2/2/3
06	**FLAGS LIT GAME START :** Set between **01** to **02**. Default is **02**. Chooses the number of Checkered Flags lit at the start of a game. DIFF: 2/2/1/0/0
07	**LOCK DIFFICULTY :** Set to **EX. EASY, EASY, MODERATE, HARD** or **EX. HARD**. Default is **MODERATE**. Determines how hard it is for a player to reach **RACE MULTIBALL**. At harder settings, the player may need to qualify the lock each time to lock a ball. At easier settings, the player can reach multiball quicker. DIFF: EASY/EASY/MEDIUM/HARD/HARD
08	**RACE LTRS GAME START :** Set between **01** to **03**. Default is **01**. Determines how many R-A-C-E letters to light at game start. DIFF: 2/1/1/0/0
09	**RACE LETTER ASSIST :** Set to **YES** or **NO**. Default is **YES**. Setting Assist to "YES" helps the player by lighting another "Spell R-A-C-E" lamp at the start of a new ball. This is helpful if novice players cannot hit the drop targets to spot these lamps. This assist may also automatically add "Spell R-A-C-E" shots to the game at the start if it's been determined that players are not playing multiball enough. This will override the next adjustment if necessary. If you do not want this behavior to happen, set this adjustment to "NO". DIFF: YES/YES/YES/NO/NO
10	**SPELL RACE AT GAME START :** Set between **00** to **04**. Default is **02**. Determines how many "Spell R-A-C-E" lamps are lit on the playfield at game start. DIFF: 4/2/2/1/0
11	**HAPPY HOUR GOAL :** Set between **01** to **10**. Default is **01**. Sets the number of Happy Hour jackpots needed to allow the Mode Bonus to be lit when the mode is over. DIFF: 1/1/1/1/1 SUBJECT TO CHANGE
12	**INFIELD PARTY GOAL :** Set between **01** to **10**. Default is **01**. Sets the number of Infield Party jackpots needed to allow the Mode Bonus to be lit when the mode is over. DIFF: 1/1/1/1/1 SUBJECT TO CHANGE
13	**SHORT TRACK GOAL :** Set between **01** to **10**. Default is **01**. Sets the number of Short Track jackpots needed to allow the Mode Bonus to be lit when the mode is over. DIFF: 1/1/1/1/1 SUBJECT TO CHANGE
14	**TEST CAR GOAL :** Set between **01** to **10**. Default is **01**. Sets the number of Test Car jackpots needed to allow the Mode Bonus to be lit when the mode is over. DIFF: 1/1/1/1/1 SUBJECT TO CHANGE

Feature Adjustments 15-35 continued on the next page.

	FEATURE ADJUSTMENT NAME: Definition
15	**HAULER RIDE GOAL :** Set between **01** to **10**. Default is **01**. Sets the number of Hauler Ride jackpots needed to allow the Mode Bonus to be lit when the mode is over. DIFF: 1/1/1/1/1 SUBJECT TO CHANGE
16	**BUMP N RUN GOAL :** Set between **01** to **10**. Default is **01**. Sets the number of Bump N Run jackpots needed to allow the Mode Bonus to be lit when the mode is over. DIFF: 1/1/1/1/1 SUBJECT TO CHANGE
17	**RIGHT SIDES GOAL :** Set between **01** to **10**. Default is **01**. Sets the number of Right Side jackpots needed to allow the Mode Bonus to be lit when the mode is over. DIFF: 1/1/1/1/1 SUBJECT TO CHANGE
18	**SUPERFAN GOAL :** Set between **01** to **10**. Default is **01**. Sets the number of Superfan jackpots needed to allow the Mode Bonus to be lit when the mode is over. DIFF: 1/1/1/1/1 SUBJECT TO CHANGE
19	**GAS N GO GOAL :** Set between **01** to **10**. Default is **01**. Sets the number of Gas N Go jackpots needed to allow the Mode Bonus to be lit when the mode is over. DIFF: 1/1/1/1/1 SUBJECT TO CHANGE
20	**LAPS TO ROAD COURSE :** S et between **10** to **60**. Default is **15**. Sets the number of inner track laps needed to light Road Course the first time. DIFF: 10/12/15/20/25
21	**LAPS TO NEXT ROAD :** Set between **10** to **60**. Default is **20**. This number is added to LAPS TO ROAD COURSE to determine the laps needed for the next Road Course award. DIFF: 10/12/20/30/35
22	**SMART BALL SAVER :** Set to **YES** or **NO**. Default is **YES**. When set to "YES", the game will attempt to get balls back onto the track faster when a ball saver is being used. DIFF: N/C
23	**MODE TIME SECONDS :** Set between **15** to **90**. Default is **25**. Determines the length of each of the Garage modes. DIFF: 40/35/25/20/20
24	**MAX BALL SAVERS :** Set between **00** to **09**. Default is **01**. Sets the maximum number of ball savers allowed in the game. DIFF: 3/2/1/0/0
25	**TRACK SAVER :** Set to **YES** or **NO**. Default is **YES**. If the ball comes off the racetrack, hits the Test Car, and then drains, the game will give the ball back to the player if this is set to "YES". DIFF: N/C
26	**EMPTY LOCKS AT GAMEOVER :** Set to **YES** or **NO**. Default is **YES**. Setting to "YES" will kick all balls out of the Pit Stop lock at the end of a game. DIFF: N/C
27	**DISABLE TRACK :** Set to **YES** or **NO**. Default is **NO**. If the Racetrack magnets or optos have become damaged or are not operational, the game will try to compensate as best as it can. If you know the Racetrack is not functional, setting this adjustment to "YES" will help the game compensate better and more quickly, allowing your players to continue to enjoy the game. DIFF: N/C
28	**SPOT UNLIT SCANNER :** Set to **YES** or **NO**. Default is **YES**. If set to "YES", arriving in the Scanner eject when it is not lit for an award will spot one more Checkered Flag standup, advancing the player toward a lit Scanner. DIFF: YES/YES/YES/NO/NO
29 - 30	**TRACK ADJUST 1 & 2 :** ***For Factory Service Use Only***
31 - 35	**PROPRIETARY 1-5 :** ***For Factory Service Use Only***

Custom Message

To go directly to ***Standard Adjustment 31, Custom Message,*** from the **ADJUSTMENT MENU**, select the "CUST MSG" *Icon* with either the **Red "LEFT"** or **Green "RIGHT" Buttons** and press the **Black "ENTER" Button**. At the top left corner of the Display, the letter **A** is indicated *(blinking)* in the first available position *(Thirty-Six (36) characters including spaces are available).* Vary the letter(s) by operating the Left and Right Flipper Buttons *(or **"RED"** or **"GREEN" Buttons**).* With the desired letter indicated, depress the **Start Button** to lock in the letter and advance to the next character. Repeat this procedure until the desired message is completed in the display. Select the "<" or ">" characters to back-space *(erase)* and/or to move forward in an already typed message. After completion, press the **"BLACK" Button**, **"REQUEST INSTALLED"** is indicated and then exits this sub-menu.

For further customization of Game Play Difficulty or Game Play Type or how to RESET ONLY the Adjustments, see Section 3, Chapter 5, GO TO INSTALLS MENU.

Go To Installs Menu

Overview

The **Portals™ Service Menu System** provides **15 Installs** to vary **Game Play (Feature Adjustments) Difficulty** or **Game Play Type** and **Install Factory** *(restores all adjustments to Factory Defaults)*.

Important: *The **Coin Door** must be **OPEN** allowing the **Memory Protect Switch** to be disabled, so any Install changes can be made.*

For **detailed customization** or to check current **Adjustments Defaults** *(either changed by YOU in the Adjustments Menu or by this* **Installs** *Menu or for Factory Default Settings), see Section **3**, Chapter **4, GO TO ADJUSTMENTS MENU**. **Important: Before preceding**,* write down any *previously changed Adjustment Defaults.* After completing one or more of the **Installs** in this Chapter, go back to the **ADJUSTMENTS MENU** to see which **Standard and/or Feature Adjustments** have changed *(Feature Adjustments and/or settings are subject to change during production, and may differ than what is described in the tables at the end of this chapter). If the settings are not to your liking, perform **one** of the following:*

1.: Manually change the **Standard & Feature Adjustments** Settings *(perform task in the **ADJUSTMENTS MENU**, see Section **3**, Chapter **4, GO TO ADJUSTMENTS MENU**).*

2.: Install Factory *(see opposite this page)* on how to reset all of the **Standard & Feature Adjustments** back to the *Factory Default Settings*.

Multiple **Installs can be set** to vary game play; however, for **Installs** that have *one or more* Adjustments in common, the ***last*** "Install" selected & *activated*, will **supersede** any previously changed Adjustment(s) from any prior **Installs**. Any adjustments which you changed and are not affected by the Install will remain as set.

For example, if you want a **5-BALL Game** *set to* **EXTRA EASY**: Select and *activate* the "5BAL" *Icon* first (which will typically change any ***Feature*** Difficulty Adjustments to **HARD**), then select & *activate* the "X.EZ" *Icon* to **change back** the Difficulty Adjustments to **EXTRA EASY**. However, if the "X.EZ" *Icon* was selected & *activated* first, then the "5BAL" *Icon* was selected & *activated*, the game will be set to a **5-BALL Game** *set to* **HARD**.

EXPLANATION & USAGE OF COMMON LARGE ICONS USED IN THIS MENU:

These ***non-selectable Icons*** appear in the *selected Menu* only when there are **MORE** Icons to the **LEFT** or to the **RIGHT** available for selection.

Select and activate to return to the **PREVIOUS** Menu.

Select and activate to **QUIT**, *exits & returns to the* ***Attract Mode***.

Select and activate to view **HELP** *Screens of the current Menu*.*

⚠ WARNING: ⚠
Selection & activation of the "Install Factory" Icon, will change all Adjustments & Installs to the Factory Default!

**** Help Note: An explanation of each Icon at that menu level will cycle continuously. To exit a display where no Icons are available for selection, pressing any button will exit the display.***

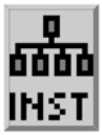

GO TO INSTALLS MENU

After entering **Portals™**, the **MAIN MENU** now appears. Select the "INST" *Icon* in the **MAIN MENU** with either the **Red "LEFT"** or **Green "RIGHT" Buttons** (the **Flipper Buttons** operates in the same manner) and press the **Black "ENTER" Button** (the **Start Button** operates in the same manner). The **INSTALLS MENU** appears. Continue through this chapter for the explanation & usage of the *Icons* in the **INSTALLS MENU**.

*View Pages **49** & **50** for an Overview of the Standard & Feature Adjustment(s) which have changed upon selection.*

Install Extra Easy, Easy, Normal, Hard or Extra Hard

To initiate, from the **INSTALLS MENU**, select the "X.EZ," "EASY," "FACT," "HARD," *or* "X.HD" *Icons* with either the **Red "LEFT"** or **Green "RIGHT" Buttons** and press the **Black "ENTER" Button**. **Game Play Difficulty** is set to **EXTRA EASY. "REQUEST INSTALLED"** is indicated and returns to the **INSTALLS MENU** with the previously selected *Icon* flashing.

*View Pages **49** & **50** for an Overview of the Standard & Feature Adjustment(s) which have changed upon selection.*

Install Directors Cut

To initiate, from the **INSTALLS MENU**, select the "DCUT" *Icon* with either the **Red "LEFT"** or **Green "RIGHT" Buttons** and press the **Black "ENTER" Button**. **Game Play Type** is set to programmers choice. **"REQUEST INSTALLED"** is indicated and returns to the **INSTALLS MENU** with the "DCUT" *Icon* flashing.

Install 3-Ball or 5-Ball

To initiate, from the **INSTALLS MENU**, select the "3BAL" *or* "5BAL" *Icon* with either the **Red "LEFT"** or **Green "RIGHT" Buttons** and press the **Black "ENTER" Button**. **Game Play Type** is set to **3-** *or* **5-BALL PLAY**. **"REQUEST INSTALLED"** is indicated and returns to the **INSTALLS MENU** with the previously selected *Icon* flashing.

$ .50 Competition (a.k.a. IFPA)

To initiate, from the **INSTALLS MENU**, select the "PAY" *Icon* with either the **Red "LEFT"** or **Green "RIGHT" Buttons** and press the **Black "ENTER" Button**. **Game Play Type** is set to **TOURNAMENT PAY MODE**. **"REQUEST INSTALLED"** is indicated and returns to the **INSTALLS MENU** with the "PAY" *Icon* flashing.

Free Play Competition (a.k.a. EXPO or PAPA)

To initiate, from the **INSTALLS MENU**, select the "FREE" *Icon* with either the **Red "LEFT"** or **Green "RIGHT" Buttons** and press the **Black "ENTER" Button**. **Game Play Type** is set to **TOURNAMENT FREE MODE**. **"REQUEST INSTALLED"** is indicated and returns to the **INSTALLS MENU** with the "FREE" *Icon* flashing.

Install Home Play

To initiate, from the **INSTALLS MENU**, select the "HOME" *Icon* with either the **Red "LEFT"** or **Green "RIGHT" Buttons** and press the **Black "ENTER" Button**. **Game Play Type** is set to **NORMAL HOME PLAY**. **"REQUEST INSTALLED"** is indicated and returns to the **INSTALLS MENU** with the "HOME" *Icon* flashing.

Film Star Reset

To initiate, from the **INSTALLS MENU**, select the "STAR" *Icon* with either the **Red "LEFT"** or **Green "RIGHT" Buttons** and press the **Black "ENTER" Button**. **Game Play Type** is set to **EASY HOME PLAY**. **"REQUEST INSTALLED"** is indicated and returns to the **INSTALLS MENU** with the "STAR" *Icon* flashing.

Install Novelty

Note:** This setting is recommended where **local laws restrict certain game features.

To initiate, from the **INSTALLS MENU**, select the "NOV" *Icon* with either the **Red "LEFT"** or **Green "RIGHT" Buttons** and press the **Black "ENTER" Button**. **Game Play Type** is set to **RESTRICTED PLAY**. **"REQUEST INSTALLED"** is indicated and returns to the **INSTALLS MENU** with the "NOV" *Icon* flashing.

Install Add-A-Ball

Note:** This setting is recommended where **local laws restrict certain game features.

To initiate, from the **INSTALLS MENU**, select the "A.A.B" *Icon* with either the **Red "LEFT"** or **Green "RIGHT" Buttons** and press the **Black "ENTER" Button**. **Game Play Type** is set to **RESTRICTED PLAY**. **"REQUEST INSTALLED"** is indicated and returns to the **INSTALLS MENU** with the "A.A.B" *Icon* flashing.

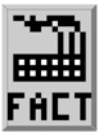

Install Factory (ONLY affects all Adjustments/Installs)

To initiate, from the **INSTALLS MENU**, select the "FACT" *Icon* with either the **Red "LEFT"** or **Green "RIGHT" Buttons** and press the **Black "ENTER" Button**. ⚠ All Standard & Feature Adjustments which were changed in the **INSTALLS** or **ADJUSTMENTS MENU** are returned to the ***Factory Defaults***. **"REQUEST INSTALLED"** is indicated and returns to the **INSTALLS MENU** with the "FACT" *Icon* flashing.

Overview of Standard Adjustment Changes upon selection of an Install:

ONLY THE STANDARD ADJUSTMENTS LISTED ARE AFFECTED AS NOTED IN THE TABLES BELOW.

Nr.	STANDARD ADJUSTMENT NAME	INSTALL EXTRA EASY	INSTALL EASY	INSTALL NORMAL	INSTALL HARD	INSTALL EXTRA HARD	INSTALL DIRECTORS CUT	INSTALL 3-BALL	INSTALL 5-BALL
10	EXTRA BALL PERCENTAGE								
14	BALLS PER GAME							03	05
38	FREEZE TIME					OFF		0:08	AUTO

ONLY THE STANDARD ADJUSTMENTS LISTED ARE AFFECTED AS NOTED IN THE TABLES BELOW.

Nr.	STANDARD ADJUSTMENT NAME	$ .50 COMPE-TITION *	FREE PLAY COMP. *	INSTALL HOME PLAY	FILM STAR RESET	INSTALL NOVELTY	INSTALL ADD-A-BALL	INSTALL FACTORY
01	REPLAY TYPE					NONE		
03	REPLAY AWARD						EX. BALL	
04	REPLAY LEVELS					NONE		
06	SPECIAL AWARD					POINTS	EX. BALL	
08	FREE GAME LIMIT					NO FREE..	NO FREE..	
09	EXTRA BALL LIMIT					NO EXTRA...	09	
10	EXTRA BALL PERCENTAGE			20%	20%			
11	GAME PRICING	USA 3						
13	MATCH PERCENTAGE			10%		OFF	OFF	
15	TILT WARNINGS	02	02					
18	GRAND CHAMPION AWARDS					00	00	
19	HIGH SCORE #1 AWARDS					00	00	
20	HIGH SCORE #2 AWARDS					00	00	
21	HIGH SCORE #3 AWARDS					00	00	
22	HIGH SCORE #4 AWARDS					00	00	
23	GRAND CHAMPION SCORE			25,000,000	25,000,000			
24	DEFAULT HIGH SCORE #1			20,000,000	20,000,000			
25	DEFAULT HIGH SCORE #2			15,000,000	15,000,000			
26	DEFAULT HIGH SCORE #3			10,000,000	10,000,000			
27	DEFAULT HIGH SCORE #4			5,000,000	5,000,000			
30	FREE PLAY	NO	YES	YES	YES			
35	GAME RESTART	NO	NO					
38	FREEZE TIME				0:10			
42	COINDOOR BALL SAVER **	(YES) **	(YES) **					
43	COMPETITION MODE ***	YES ***	YES ***					

CAUTION! : Upon selection of **Install Factory** *("FACT" Icon)*, all Standard & Feature Adjustments which were changed in the **INSTALLS** or **ADJUSTMENTS MENU** are returned to the ***Factory Defaults*** *(see the Adjustment Tables on Page 38 for details).*

* If ***Competition Mode*** was set, it is suggested to **Install Factory** to restore all Adjustments to the *Factory Defaults.* Then recustomize, if desired.

*** Adjustment 42 Default **will not change**; Installing $ .50 **or** Free Play Competition will override this Adjustment regardless of the setting.*
**** If Adjustment 43 is changed back to **NO** after this Install, the Competition Mode Install will be canceled (turned off).*

After selection an Install, go back to the Feature Adj. Menu and note the changes:

ONLY THE FEATURE ADJUSTMENTS LISTED ARE AFFECTED AS NOTED IN THE TABLES BELOW.

Nr.	FEATURE ADJUSTMENT NAME	INSTALL EXTRA EASY	INSTALL EASY	INSTALL NORMAL (FACTORY)	INSTALL HARD	INSTALL EXTRA HARD	INSTALL DIRECTORS CUT	INSTALL 3-BALL	INSTALL 5-BALL
01	BONUS CARRYOVER			NO				NO	
02	POPS LIT GAME START			01				01	
03	EXTRA BALL MEMORY			YES				YES	
04	CAR START POSITION			10				10	
05	GARAGE READY HITS			02				02	
06	FLAGS LIT G.START			02				02	
07	LOCK DIFFICULTY			MODERATE				MODERATE	
08	RACE LTRS GAME START			01				01	
09	RACE LTR ASSIST			YES				YES	
10	SPELL RACE GAME START			02				02	

... Feature Adjustment Menu Install Changes ... continued on the next page.

After selection an Install, go back to the Feature Adj. Menu and note the changes:

ONLY THE FEATURE ADJUSTMENTS LISTED ARE AFFECTED AS NOTED IN THE TABLES BELOW.

Nr.	FEATURE ADJUSTMENT NAME	INSTALL EXTRA EASY	INSTALL EASY	INSTALL NORMAL (FACTORY)	INSTALL HARD	INSTALL EXTRA HARD	INSTALL DIRECTORS CUT	INSTALL 3-BALL	INSTALL 5-BALL
11	HAPPY HOUR GOAL			01				01	
12	INFIELD PARTY GOAL			01				01	
13	SHORT TRACK GOAL			01				01	
14	TEST CAR GOAL			01				01	
15	HAULER RIDE GOAL			01				01	
16	BUMP N RUN GOAL			01				01	
17	RIGHT SIDES GOAL			01				01	
18	SUPERFAN GOAL			01				01	
19	GAS N GO GOAL			01				01	
20	LAPS TO ROAD COURSE			30				30	
21	LAPS TO NEXT ROAD			25				25	
22	SMART BALL SAVER			YES				YES	
23	MODE TIME SECONDS			25				25	
24	MAX BALL SAVERS			1				1	
25	TRACK SAVER			YES				YES	
26	EMPTY LOCKS AT G.O.			YES				YES	
27	DISABLE TRACK			NO				NO	
28	SPOT UNLIT SCANNER			YES				YES	

ONLY THE FEATURE ADJUSTMENTS LISTED ARE AFFECTED AS NOTED IN THE TABLES BELOW.

Nr.	FEATURE ADJUSTMENT NAME	$ .50 COMPE-TITION *	FREE PLAY COMP. *	INSTALL HOME PLAY	FILM STAR RESET	INSTALL NOVELTY	INSTALL ADD-A-BALL	INSTALL FACTORY
01	BONUS CARRYOVER							
02	POPS LIT GAME START							
03	EXTRA BALL MEMORY							
04	CAR START POSITION							
05	GARAGE READY HITS							
06	FLAGS LIT G.START							
07	LOCK DIFFICULTY							
08	RACE LTRS GAME START							
09	RACE LTR ASSIST							
10	SPELL RACE GAME START							
11	HAPPY HOUR GOAL							
12	INFIELD PARTY GOAL							
13	SHORT TRACK GOAL							
14	TEST CAR GOAL							
15	HAULER RIDE GOAL							
16	BUMP N RUN GOAL							
17	RIGHT SIDES GOAL							
18	SUPERFAN GOAL							
19	GAS N GO GOAL							
20	LAPS TO ROAD COURSE							
21	LAPS TO NEXT ROAD							
22	SMART BALL SAVER							
23	MODE TIME SECONDS							
24	MAX BALL SAVERS							
25	TRACK SAVER							
26	EMPTY LOCKS AT G.O.							
27	DISABLE TRACK							
28	SPOT UNLIT SCANNER							

CAUTION! : Upon selection of **Install Factory** *("FACT" Icon)*, all Standard & Feature Adjustments which were changed in the **INSTALLS** or **ADJUSTMENTS MENU** are returned to the ***Factory Defaults*** *(see the Adjustment Tables on Page 38 for details).*

For how to RESET Audits (also can RESET High Scores, Credits or Reset All Adjustments), see Section 3, Chapter 6, GO TO RESET MENU (next page).

Go To Reset Menu

Overview

The **Portals™ Service Menu System** provides five (5) functions to reset **Coin & Game Audits**, **High Scores**, **Credits** *or to reset* **ALL AUDITS, ADJUSTMENTS & INSTALLS** back to the ***Factory Default Settings***.

Important: *The **Coin Door** must be **OPEN** allowing the **Memory Protect Switch** to be disabled, so any Reset changes can be made.*

EXPLANATION & USAGE OF COMMON LARGE ICONS USED IN THIS MENU:

These ***non-selectable Icons*** appear in the *selected Menu* only when there are **MORE** Icons to the **LEFT** or to the **RIGHT** available for selection.

Select and activate to return to the **PREVIOUS** Menu.

Select and activate to **QUIT**, *exits & returns to the* ***Attract Mode***.

Select and activate to view **HELP** *Screens of the current Menu*.*

⚠ WARNING: ⚠
As soon as any Reset Icon is selected & activated, the information associated with the Reset Icon, is lost!

**** Help Note:** An explanation of each Icon at that menu level will cycle continuously. To exit a display where no Icons are available for selection, pressing any button will exit the display.*

GO TO RESET MENU

After entering **Portals™**, the **MAIN MENU** now appears. Select the "RESET" *Icon* in the **MAIN MENU** with either the **Red "LEFT"** or **Green "RIGHT" Buttons** (the **Flipper Buttons** operates in the same manner) and press the **Black "ENTER" Button** (the **Start Button** operates in the same manner). The **RESET MENU** appears. Continue below for the explanation & usage of the *Icons* in the **RESET MENU**.

Reset Coin Audits

To initiate, from the **RESET MENU**, select the "COIN" *Icon* with either the **Red** or **Green Buttons** and press the **Black Button**. ⚠ **ONLY** the **Coin Audits (05-13)** will be reset to zero (0), *Factory Default Settings.* **"REQ. INSTALLED"** is indicated & returns to the **RESET MENU** with the "COIN" *Icon* flashing.

Reset Game Audits

***Note:** **Coin Audits (05-13)** & **Software Meter Audit (14)** will not be reset.*

To initiate, from the **RESET MENU**, select the "AUD" *Icon* with either the **Red** or **Green Buttons** and press the **Black Button**. ⚠ **ONLY** the **Game Audits *(01-04)*** & ***Standard Audits (01-67)*** will be reset to zero (0), *Factory Default Settings.* **"REQUEST INSTALLED"** is indicated and returns to the **RESET MENU** with the "AUD" *Icon* flashing.

Reset High Scores

***Note:** If these five (5) adjustments were not personally changed by you, the Factory Default Settings will be used (see Section **3**, Chapter **4**, **GO TO ADJUSTMENTS MENU**, **Standard Adjustments 18-22**).*

To initiate, from the **RESET MENU**, select the "HSTD" *Icon* with either the **Red** or **Green Buttons** and press the **Black Button**. ⚠ **ONLY** the **High Scores** will be reset to the current values. **"REQUEST INSTALLED"** is indicated and returns to the **RESET MENU** with the "HSTD" *Icon* flashing.

Reset Grand Champion

To initiate, from the **RESET MENU**, select the "GC" *Icon* with either the **Red** or **Green Buttons** and press the **Black Button**. ⚠ **ONLY** the **Grand Champion Score** will be reset to the current value. **"REQUEST INSTALLED"** is indicated and returns to the **RESET MENU** with the "GC" *Icon* flashing.

Reset Credits

To initiate, from the **RESET MENU**, select the "CRED" *Icon* with either the **Red** or **Green Buttons** and press the **Black Button**. ⚠ All **Credits** will be reset to zero (0), *Factory Default Settings.* **"REQUEST INSTALLED"** is indicated and returns to the **RESET MENU** with the "CRED" *Icon* flashing.

Factory Reset

***Note:** To **RESET ONLY** the ADJUSTMENTS & INSTALLS (leaving all the Audits alone), see Section **3**, Chapter **5**, **GO TO INSTALLS MENU**, **Install Factory**.*

To initiate, from the **RESET MENU**, select the "FACT" *Icon* with either the **Red** or **Green Buttons** and press the **Black Button**. ⚠ All **Audits** *(except for Audit **14**, **Software Meter**)*, all **Adjustments** and **Installs** will be reset to the *Factory Default Settings*. **"REQUEST INSTALLED"** is indicated and the **Service Menu** is exited, returning to the ***Attract Mode***.

Example:

After entering **Portals**™, the **MAIN MENU** now appears. Use the **Red "LEFT"** or **Green "RIGHT" Buttons** to select the "RESET" *Icon* (**GO TO RESET MENU**).

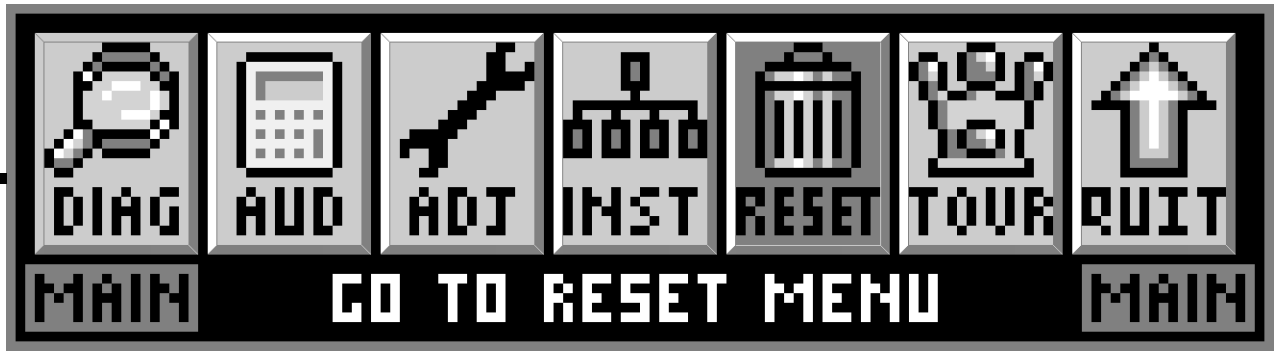

Press the **Black "ENTER" Button** to *activate* this **ICON**. The **RESET MENU** now appears with the "COIN" *Icon* (**RESET COIN AUDITS**) flashing:

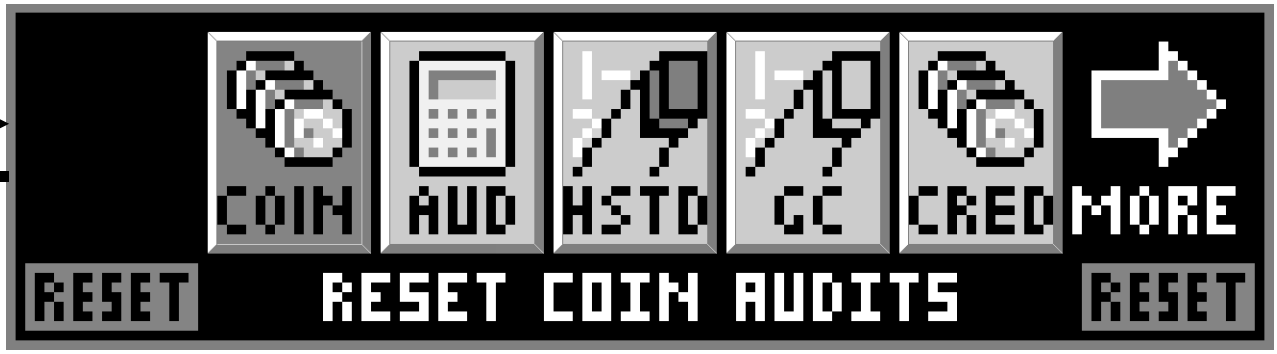

From the **RESET MENU**, select any of the *Icons* ("COIN", "AUD", "HSTD", "GC", "CRED") with either the **Red** or **Green Buttons** and press the **Black Button** to *activate* the **ICON** chosen. After the **ICON** is selected & *activated,* "REQUEST INSTALLED" is indicated and is returned to the **RESET MENU** with the previously selected *Icon* flashing.

Important:

AT THIS TIME, ***DO NOT*** PRESS THE **START BUTTON** OR **BLACK BUTTON** AFTER SELECTING ANY OF THE FIVE (5) ICONS UNLESS THIS IS WHAT IS DESIRED. ***THE INFORMATION ASSOCIATED WITH THE RESET ICON WILL BE LOST!*** *PLEASE READ THE PREVIOUS PAGE* FOR EXACTLY WHAT WILL HAPPEN IF ANY OF THESE FIVE (5) ICONS ARE *SELECTED & ACTIVATED.*

*Before performing any **RESET**, write down your **last Audit Totals** (see Section **3**, Chapter **3**, **GO TO AUDITS MENU**) and any **personalized Adjustment changes** you may have made (see Section **3**, Chapter **4**, **GO TO ADJUSTMENTS MENU**).*

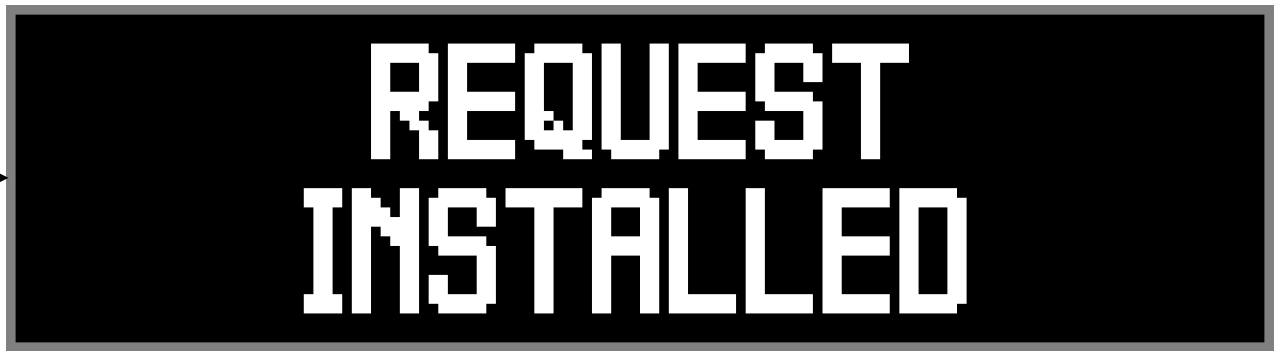

If the "FACT" *Icon* is select and *activated*, "**REQUEST INSTALLED"** is indicated and the **Service Menu** is exited, returning to the ***Attract Mode***. *See the previous page for explanation & usage of the Icons in the **RESET MENU**.*

Go To Tournament Menu

Overview

The **Portals™ Service Menu System** provides **6** Steps necessary to **SET-UP**, **START**, **MONITOR** and **END** Pinball Tournaments on your *Tournament Pinball System Ready Pinball Game.* ***OPTIONAL EQUIPMENT & HARDWARE (SOLD SEPARATELY) ARE REQUIRED FOR PROPER OPERATION AND USE OF THIS MENU.***

Game code may get upgraded during production; compare all Tournament Adjustments & Audits in the display with the manual and make any corrections to the Tournament Adjustments and/or Audits Tables *(next page),* as necessary. Tournament Adjustments & Audits are subject to change *(with or without notice)*. To view Tournament Adjustments & Audits in the display, enter the **Portals™ Service Menu System**. When any change is made and then the next / previous item is selected *(or the Sub-Menu is exited)*, the display will momentarily flash **REQUEST INSTALLED**. *For details on* ***Earnings, Standard & Feature Audits****, see Section* ***3****, Chapter* ***3****,* ***GO TO AUDITS MENU****. For details on* ***Standard & Feature Adjustments****, see Section* ***3****, Chapter* ***4****,* ***GO TO ADJUSTMENTS MENU****.*

Tournament Operation Note:

The use of the *Tournament Equipment* and/or running a Tournament is **OPTIONAL** and to be used solely in the discretion of the owner.

It is the sole responsibility of the operator to ensure that this product is used in conformity with all applicable laws. Stern Pinball, Inc.® disclaims any such responsibility.

Due to continuing product innovation, information in this chapter is subject to change without notice.

For more details on the equipment & hardware required, installation and set-up, read the **ToPS™ Tournament Pinball System Kit Installation Manual** *(SPI Part Number: 780-6011-01)* provided in the ***Optional Tournament Kit**** *(SPI Part Number: 502-5011-00). *Not included with this ToPS™ Ready Pinball Game.*

The equipment & hardware consists of: **Electronic 7 X 80 Multi-Color Dot Display** (*secured above the Backbox*), **Tournament Serial Interface (TSI) Board** *(secured in the Backbox)*, **Tournament Button + Lamp** (*secured onto the Front Molding)* and all necessary wiring, hardware and documentation *(which also provides suggestions and Tips for ToPS™).*

To order, contact your local Distributor *(view Pages* ***DR.*** ❽ *&* ❾ *in the* ***Find-It-In-Front: Dr. Pinball****).* You can also call Technical Support or visit our website *(details on the back cover of this manual).*

Important: *The* ***Coin Door*** *must be* ***OPEN*** *allowing the* ***Memory Protect Switch*** *to be disabled, so any Tournament changes can be made.*

EXPLANATION & USAGE OF COMMON LARGE & MINI-ICONS USED IN VARIOUS MENUS & SUB-MENUS:

These *non-selectable Icons* appear in the *selected Menu* only when there are **MORE** Icons to the **LEFT** or to the **RIGHT** available for selection.

Select and activate to return to the **PREVIOUS** Menu.

Select and activate to **QUIT**, *exits & returns to the* ***Attract Mode****.*

Select and activate to view **HELP** *Screens of the current Menu*.*

** Help Note: An explanation of each Mini-Icon at that menu level will cycle continuously. To exit a display where no Mini-Icons are available for selection, pressing any button will exit the display.*

GO TO TOURNAMENT MENU (OPTIONAL USE ONLY)

After entering **Portals™**, the **MAIN MENU** now appears. Select the "TOUR" *Icon* in the **MAIN MENU** with either the **Red "LEFT"** or **Green "RIGHT" Buttons** (the **Flipper Buttons** operates in the same manner) and press the **Black "ENTER" Button** (the **Start Button** operates in the same manner). The **TOURNAMENT MENU** appears. Continue through this chapter for the explanation & usage of the *Icons* in the **TOURNAMENT MENU**.

Tournament Adjustment & Audit Tables on the next page.

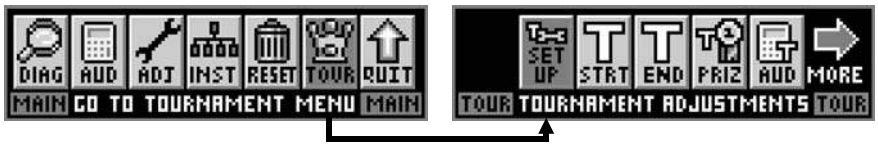

TOURNAMENT ADJUSTMENT TABLES

TOURNAMENT ADJUSTMENTS 01-15

Nr.	ADJUSTMENT NAME	USA DEFAULT	YOUR SETTING
01	CREDITS PER PLAY	02	
02	JACKPOT BASE	$20.00	
03	JACKPOT INCREMENT	$00.50	
04	JACKPOT MAX.	$2,500.00	
05	CURRENT DATE/TIME	JAN. 01, 2004 12:00:00 AM	
06	START DATE	FEB. 01, 2004 12:00:00 AM	
07	END DATE	MARCH 01, 2004 12:00:00 AM	
08	# OF PRIZES	03	

Nr.	ADJUSTMENT NAME	USA DEFAULT	YOUR SETTING
09	AWARD TYPE	CASH	
10	SHOW PLAYER'S CASH	YES	
11	TOURNAMENT TYPE	BUMP N' WIN	
12	BUMP N' WIN BASE	"varies"	
13	BALLS PER TOURNAMENT	03	
14	BNW DATE SENSITIVE	YES	
15	BNW FIRST PLACE	BUMP	

Note: *Adjustments and/or variables are subject to change (with or without notice).*

Note: *The above adjustments must be set just before selecting and activating the "STRT" Icon (**START TOURNAMENT**). See the following pages for explanation and more details.*

SIGN MESSAGES A-B (ADJUSTMENTS 16-17)

Nr.	ADJUSTMENT NAME	USA DEFAULT	YOUR SETTING
16	LOCATION MESSAGE	ON	

Nr.	ADJUSTMENT NAME	USA DEFAULT	YOUR SETTING
17	PRIZE MESSAGE	ON	

Sec. 3: Tournament ...

STARTING METER Reading :

STARTING METER Date (MM/DD/YR) :

AUDITOR'S NAME :

CURRENT VOLUME SETTING:

CURRENT METER Reading :

AUDIT Date (MM/DD/YR) :

CPU Version :

DISPLAY Version :

GAME LOCATION NAME :

See Adj. 06 & 07 above >>

TOURNAMENT START DATE :

TOURNAMENT END DATE :

TOURNAMENT AUDIT TABLE

TOURNAMENT AUDITS 01-14

Audit definitions follow in this Chapter.

01	TOTAL PLAYS
02	TOURNAMENT PLAYS
03	TOTAL QUALIFYING PLAYS
04	TOTAL GAME EARNINGS
05	TOTAL TOUR. EARNINGS
06	JACKPOT
07	NET EARNINGS
08	ACCUM. TOTAL PLAYS
09	ACCUM. TOUR. PLAYS
10	ACCUM. QUALIFYING PLAYS
11	ACCUM. EARNINGS
12	ACCUM. TOUR EARNINGS
13	ACCUM. JACKPOT
14	# TOURNAMENTS

Tournament Adjustments (01-15)

To initiate, from the **TOURNAMENT MENU**, select the "SET UP" *Icon* with either the **Red "LEFT"** or **Green "RIGHT" Buttons** and press the **Black "ENTER" Button**. Select and *activate* either of the ">>" *Mini-Icon*s to view the next or previous Tournament Adjustment in this group. Select and *activate* either of the "-" or "+" *Mini-Icons* to change the setting, if desired *(the Default Setting is noted in the definitions below)*. The display will describe the **Tournament Adjustment Number**, **Tournament Adjustment Name** and the **Current Tournament Adjustment Setting**. The current Tournament Adjustment will remain in the display until the next Tournament Adjustment is viewed or when this Menu is exited.

Note on Tournament Adjustments 5, 6 & 7: ***Requires the TIMEKEEPER™ IC (included in the kit) installed in Location U212 on the CPU/Snd. Board.*** How to change the **CURRENT DATE/TIME**, **START DATE** & **END DATE:** Upon entering the menu, the ">>" *Mini-Icon* and the Month is flashing. Use the "+" or "-" *Mini-Icon* to change the month. Select the ">>" *Mini-Icon* again, now the day can be changed. Continue this until all is set to your liking. After the **CURRENT DATE/TIME** (T. Adj. 05) and the **START** & **END DATE/TIME** (T. Adj. 06/07) are set, the "STRT" *Icon* must be activated, in order for the Tournament to start and end automatically. In the event you have to **End a Tournament** before your designated date/time *or* you do not have the TIMEKEEPER™ IC installed go back to the **TOURNAMENT MENU** and select the "END" *Icon (see the next page) to stop the Tournament.*

IMPORTANT FOR TOURNAMENT USERS: *Select the settings carefully.* Before allowing players to begin after you've started a Tournament, double-check the **Normal Mono-Color Dot Display** and **Top Multi-Color Dot (Beta Brite®) Display** to ensure everything you want is displayed correctly. Once a Tournament is started, no adjustments can be made until you end the Tournament *(by selecting the "END" Icon).* Allowing players to qualify, then ending a Tournament prematurely to make corrections will affect the outcome of the Tournament.

WARNING: Changes made in any Adjustments will be lost after a FACTORY RESET or removal of the CPU/Sound Board Batteries.

Nr.	TOURNAMENT ADJUSTMENT NAME: Definition
01	**CREDITS PER PLAY :** Set between **01 - 10**. Default is **02**. Set the maximum number of *Credits* that may be accumulated per game.
02	**JACKPOT BASE :** Set between **$00.00 - $999,999.00** *(increments of $1).* Default is **$20.00**. Set the initial *Prize Pool Amount* to be offered for the Tournament. ***Note:*** *The displays will present the words "**PRIZE POOL**" in lieu of the word "JACKPOT".*
03	**JACKPOT INCREMENT :** Set between **$00.00 - $999,999.99** *(increments of 1¢).* Default is **$00.50**. Set the *Prize Pool Increment* which will increase the *Prize Pool Amount* with each Tournament Game played.
04	**JACKPOT MAX. :** Set between **$00.00 - $999,999.00** *(increments of $1).* Default is **$2,500.00**. Set the maximum cap to be placed on the *Prize Pool* during a Tournament. ***Note:*** *The displays will present the words "**PRIZE POOL**" in lieu of "JACKPOT".*
05	**CURRENT DATE/TIME :** Set the current **MONTH**, **DAY**, **YEAR**, **HOUR (AM/PM)**, **MINUTE** and **SECOND**. Default is **JAN. 01, 2004 12:00:00 AM**.
06	**START DATE :** Set the desired **MONTH**, **DAY**, **YEAR**, **HOUR (AM/PM)**, **MINUTE** and **SECOND**. Default is **FEB. 01, 2004 12:00:00 AM**.
07	**END DATE :** Set the desired **MONTH**, **DAY**, **YEAR**, **HOUR (AM/PM)**, **MINUTE** and **SECOND**. Default is **MARCH 01, 2004 12:00:00 AM**.
08	**# OF PRIZES :** Set between **01 - 05** *(If Tournament Adj. 11 is set to REGULAR)* or **02 - 05** *(If Tournament Adj. 11 is set to BUMP N' WIN).* Default (for either) is **04**. Set the max. number of *Prize Positions* to be awarded during a Tournament. ***Selections are as follows*** *(percentage distribution cannot be changed):*

If below Tournament Adj. 11 is set to **REGULAR** :	If Trn. Adj. 11 is set to **BUMP N' WIN** *(Default)* **:**
Set to **01** 1 Winner **100%** (1) Prize Pool	*Cannot set to 01. Minimum of 2 winners required.*
Set to **02** 2 Winners **65%** (1) **35%** (2)	Set to **02** 2 Winners **65%** (1) **35%** (2)
Set to **03** 3 Winners **50%** (1) **30%** (2) **20%** (3)	Set to **03** 3 Winners **50%** (1) **25%** (2) **25%** (3)
Set to **04** 4 Winners **50%** (1) **25%** (2) **15%** (3) **10%** (4)	Set to **04** 4 Winners **40%** (1) **20%** (2) **20%** (3) **20%** (4)
Set to **05** 5 Winners **50%** (1) **20%** (2) **15%** (3) **10%** (4) **5%** (5)	Set to **05** 5 Winners **40%** (1) **15%** (2) **15%** (3) **15%** (4) **15%** (5)

09	**AWARD TYPE :** Set to **CASH**, **POINTS**, **TICKET**, **NONE** or **PRIZE**. Default is **CASH**. Select **CASH** for the displays to represent the Prize Pool amount *(based on Jackpot Base and Max.)* in ***$Dollars***. Select **POINTS** for the displays to represent the Prize Pool amount in ***Points***. Select **TICKET** for the display to represent the Prize Pool amount in ***Tickets***. Select **NONE** ***NOT TO*** represent the Prize Pool amount *(if prize(s) to be awarded are not Cash, Points or Tickets).* Select **PRIZE**, if applicable.

Above T-Adj. 9 determines how the Prize Pool is to be represented in the Attract Mode on both the Normal & top Beta-Brite® Displays.

10	**SHOW PLAYER'S CASH :** Set to **YES** or **NO**. Default is **YES**. When set to **YES**, the >>> **previous** <<< Tournament Winners & Cash amount will show in the ***Attract Mode*** on both Dot Displays.
11	**TOURNAMENT TYPE :** Set to **REGULAR** or **BUMP N' WIN**. Default is **BUMP N' WIN**.
12	**BUMP N' WIN BASE :** Set between **X,000,000 - XX,000,000** *(increments of 1M).* Default is ***varies***. Set the desired ***Bump N' Win Tournament*** base score. ***Tournament Adj. 11*** *must be set to* ***BUMP N' WIN.***
13	**BALLS PER TOURNAMENT :** This adjustment only affects **TOURNAMENT GAMES**. Set between **02 - 09**. Default is **03**. Set the max. number of balls per game.
14	**BNW DATE SENSITIVE :** Set to **YES** or **NO**. Default is **YES**. When set to **YES**, the scores/criterion selected are influenced by the Tournament End Date selected.
15	**BNW FIRST PLACE :** Set to **BUMP** or **REPLACE**. Default is **BUMP**. When set to **BUMP**, the 1st place player is bumped to 2nd *(and in-turn bumps remaining leaders down 1).* When set to **REPLACE**, the 1st place player is replaced by the new 1st place player *(the other board leaders are therefore not bumped down).*

Score Range and Default varies from title to title.

Start Tournament (select only after Set-Up is completed)

To initiate, from the **TOURNAMENT MENU**, select the "STRT" *Icon* with either the **Red "LEFT"** or **Green "RIGHT" Buttons** and press the **Black "ENTER" Button**. The **"START TOURNAMENT?" MENU** appears with the "NO" *Mini-Icon* flashing. If ***Set-Up (Tournament Adjustments)*** *was not completed* ***OR*** the ***Tournament Audits were not*** **recorded from the prior Tournament**, exit this Menu by activating the "NO" *Mini-Icon*. If ***Set-Up*** *was completed and the* ***Tournament Audits*** *were recorded,* select and activate the "YES" *Mini-Icon.* The Pinball Game is set to **Tournament Ready Mode** *(the* ***Flashing Tournament Button*** *must be depressed for a Tournament Game after the proper credit is inserted).* **"REQUEST INSTALLED"** is indicated and returns to the **TOURNAMENT MENU** with the "STRT" *Icon* flashing. ***Note:*** *If the "STRT" Icon appears to be non-functioning, it is because a Tournament is in progress. The Tournament must first be stopped (select and activate the "END" Icon in the* ***TOURNAMENT MENU****).*

Stop Tournament (select if no TIMEKEEPER is installed*)

* *If Timekeeper is* ***NOT installed*** *or you have to end the Tournament prematurely, use this Icon to end it.* To initiate, from the **TOURNAMENT MENU**, select the "END" *Icon* with either the **Red "LEFT"** or **Green "RIGHT" Buttons** and press the **Black "ENTER" Button**. The **"END TOURNAMENT?" MENU** appears with the "NO" *Mini-Icon* flashing. If the ***Tournament*** *was not completed*, exit this Menu by activating the "NO" *Mini-Icon*. If the ***Tournament*** *was completed (the End Date set has passed)*, select and activate the "YES" *Mini-Icon. The Pinball Game is taken out of* **Tournament Ready Mode** *(to readjust any Tournament Adjustments, the Tournament must be "stopped").* **"REQUEST INSTALLED"** is indicated and returns to the **TOURNAMENT MENU** with the "END" *Icon* flashing. ***Record your Tournament Audits at this time as they will be reset (except for the "Accumulative Audits) if another Tournament is started!***

Tournament Prizes

To initiate, from the **TOURNAMENT MENU**, select the "PRIZ" *Icon* with either the **Red "LEFT"** or **Green "RIGHT" Buttons** and press the **Black "ENTER" Button**. Select and *activate* either of the ">>" *Mini-Icons* to view the next or previous Leader in this group. The display will describe the **Leader Placement (1st, 2nd, 3rd, 4th & 5th)**, **Leader Name**, **4-Digit Pin-Code**, and **Prize Pool** portion for the *Current and Previous Tournaments.* The current Leader *(and related information)* will remain in the display until the next Leader is chosen or when the Sub-Menu is exited.

Tournament Audits (01-14)

To initiate, from the **TOURNAMENT MENU**, select the "AUD" *Icon* with either the **Red "LEFT"** or **Green "RIGHT" Buttons** and press the **Black "ENTER" Button**. Select and *activate* either of the ">>" *Mini-Icons* to view the next or previous Tournament Audit in this group. The display will describe the **Tournament Audit Number**, **Tournament Audit Name** and the **Current Tournament Audit Total** (Value). The current Tournament Audit will remain in the display until the next Tournament Audit is viewed or when this Menu is exited.

IMPORTANT FOR TOURNAMENT USERS: ***>>>> A L L*** *of the Tournament Audits* ***01-14 are RESET O N L Y if a Factory Reset is done*** *(see Section* ***3****, Chapter* ***6****,* ***GO TO RESET MENU****).* ***>>>> Tournament Audits 01-07 are RESET ONLY if a new Tournament is started****.* ***>>>> Tournament Audits 07-14*** *are* ***NOT RESET****, they're accumulative (totals accumulate since the first Tournament was played).* **if no Factory Reset is done.*

Nr.	TOURNAMENT AUDIT NAME: Definition
01	**TOTAL PLAYS :** Provides the total number of *Regular* and *Tournament Games* played while a *Tournament is active (in progress).* This total is derived by adding the below Tournament Audit **02** with ***Regular Plays.***
02	**TOURNAMENT PLAYS :** Provides the total number of *Tournament Games* played while a *Tournament is active (in progress).*
03	**TOTAL QUALIFYING PLAYS :** Provides the total number of times a player qualified *(invited to enter name).*
04	**TOTAL GAME EARNINGS :** Provides the total Gross Earnings *accepted,* while a *Tournament is active (in progress).*
05	**TOTAL TOUR. EARNINGS :** Provides the total Tournament Earnings *(Audit* ***04*** *less Regular Game Earnings)* while a *Tournament is active (in progress).*
06	**JACKPOT (PRIZE POOL TOTAL) :** Provides the total Prize Pool *(Jackpot)* Amount to be paid out while a *Tournament is active (in progress).*

Tournament Audits 07-14 continued on the next page.

	TOURNAMENT AUDIT NAME: Definition
07	**NET EARNINGS :** Provides the total Net Earnings *(Gross Earnings less Prize Pool)* while a *Tournament is active (in progress).*
08	**ACCUM. TOTAL PLAYS :** Provides the accumulative total amount of *Regular & Tournament Games* played since the first Tournament was played.
09	**ACCUM. TOUR. PLAYS :** Provides the accumulative total amount of *Tournament Games* played since the first Tournament was played.
10	**ACCUM. QUALIFYING PLAYS :** Provides the accumulative total number of times a player qualified *(invited to enter name).*
11	**ACCUM. EARNINGS :** Provides the total Gross Earnings *accepted,* since the first Tournament was played.
12	**ACCUM. TOUR EARNINGS :** Provides the accumulative total Tournament Game Earnings since the first Tournament was played.
13	**ACCUM. JACKPOT :** Provides the accumulative total of Prize Pool *(Jackpot)* Amounts paid out since the first Tournament was played.
14	**# TOURNAMENTS :** Provides the number of Tournaments *(not individual Tournament Games)* since the first Tournament was played.

Sign Messages A-B (Tournie Adj. 16-17)

To initiate, from the **TOURNAMENT MENU**, select the "A-B TEXT" *Icon* with either the **Red "LEFT"** or **Green "RIGHT" Buttons** and press the **Black "ENTER" Button**. Select and *activate* either of the ">>" *Mini-Icon*s to view the next or previous Tournament Adjustment in this group. Select and *activate* either of the "-" or "+" *Mini-Icons* to change the setting, if desired *(the Default Setting is noted in the definitions below)*. The display will describe the **Tournament Adjustment Number**, **Tournament Adjustment Name** and the **Current Tournament Adjustment Setting**. The current Tournament Adjustment will remain in the display until the next Tournament Adjustment is viewed or when this Menu is exited.

Nr.	TOURNAMENT ADJUSTMENT NAME: Definition
16	**LOCATION MESSAGE :** Set to **ON, CHANGE** or **OFF**. Default is **ON**. When set to **CHANGE**, a new message can be set or the old one can be edited *(select the "+" Mini-Icon to change settings until "CHANGE" appears in the display, then select the ">>" Mini-Icon to access.).* At the top left corner of the Display, the letter **A** is indicated *(blinking)* in the first available position. Vary the letter(s) by operating the Left and Right Flipper Buttons *(or* **"RED"** *or* **"GREEN" Buttons***).* With the desired letter indicated, depress the **Start Button** to lock in the letter and advance to the next character. Repeat this procedure until the desired message is completed in the display. Select the "<" or ">" characters to back-space *(erase)* and/or to move forward in an already typed message. After completion, press the **"BLACK" Button**, **"REQUEST INSTALLED"** is indicated and then exits this sub-menu.
17	**PRIZE MESSAGE :** Set to **ON, CHANGE** or **OFF**. Default is **ON**. *Procedure identical to Tournament Adjustment **16, Location Message**.*

The ***DEFAULT LOCATION MESSAGE*** is:

STERN PINBALL PROUDLY PRESENTS...

The ***DEFAULT PRIZE MESSAGE*** is:

YOU CAN BE THE NEXT BIG WINNER!

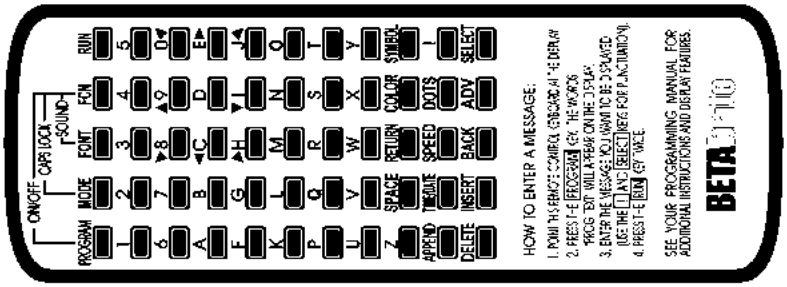

IMPORTANT FOR TOURNAMENT USERS: ***2 additional messages can be added*** by using the **Beta Brite® Remote**. More details in the **ToPS™ Tournament Pinball System Kit Installation Manual** *(SPI Part Number: 780-6011-01)* provided in the ***Optional Tournament Kit*** *(SPI Part Number: 502-5011-00).*

Which Switch is Which? Switch between chapters ...

Identifying switches. Find your switch in the **Pink** or **Blue Pages**. *For playfield switch location, see Pages **66-67**.* These pages identify the type, quantity used, location and switch matrix number. You can also find your switch on the assembly itself, by looking in **Chapter 2, Drawings for Major Assemblies & Ramps**; *see Page **81** to locate your assembly and page number.*

- **180-5200-00**
  For views, see Page 82
- **180-5116-01**
  For views, see Pages 84-85
- **180-5178-00**
- **180-5179-00**
  For views, see Page 91
- **180-5057-00**
  For views, see Page 100

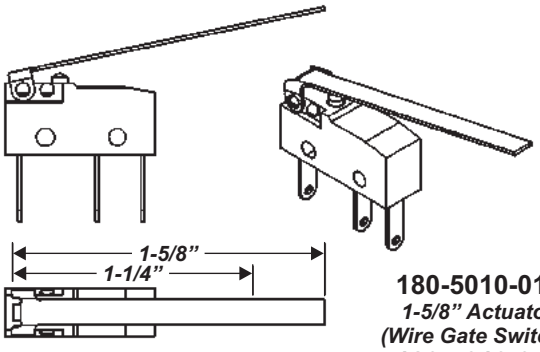

180-5010-01
1-5/8" Actuator
(Wire Gate Switch)
180-5010-04
1-1/4" Actuator
(Spinner Switch)

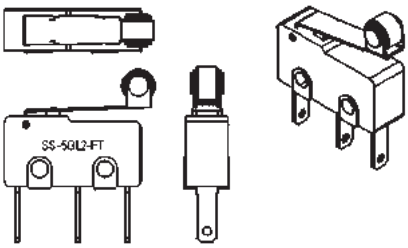

180-5119-02
Roller Actuator
(Ball Trough Switch and Special Applications)
SS-5GL2-FT

Telling your Left from your Right ...

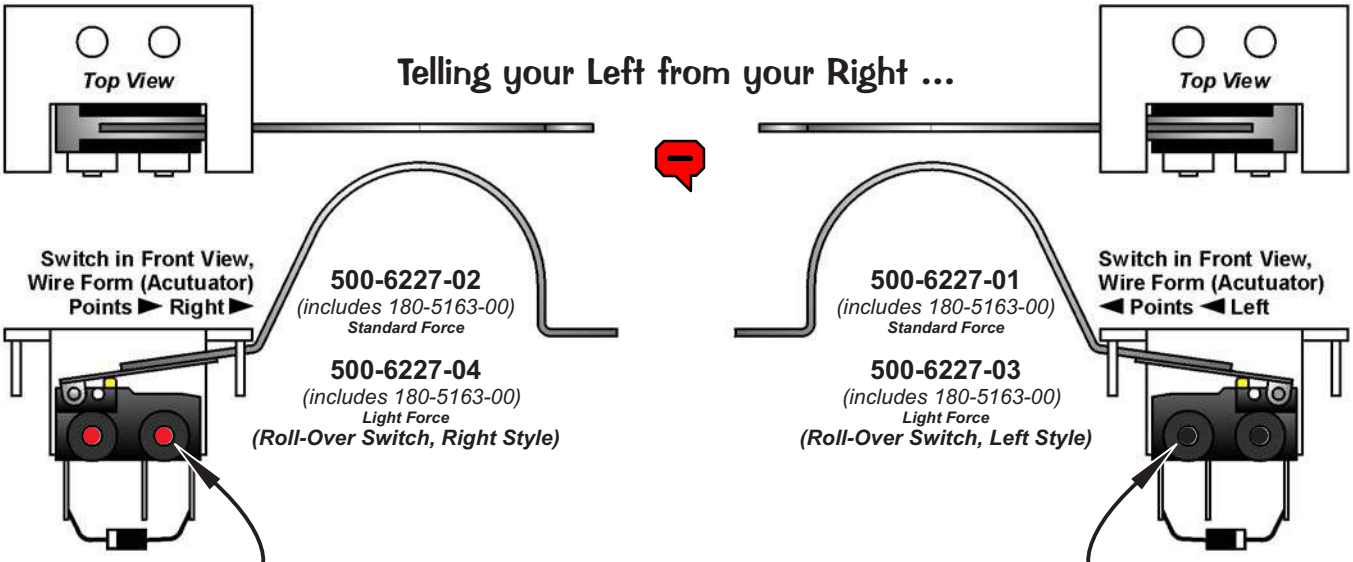

500-6227-02
(includes 180-5163-00)
Standard Force

500-6227-04
(includes 180-5163-00)
Light Force
(Roll-Over Switch, Right Style)

500-6227-01
(includes 180-5163-00)
Standard Force

500-6227-03
(includes 180-5163-00)
Light Force
(Roll-Over Switch, Left Style)

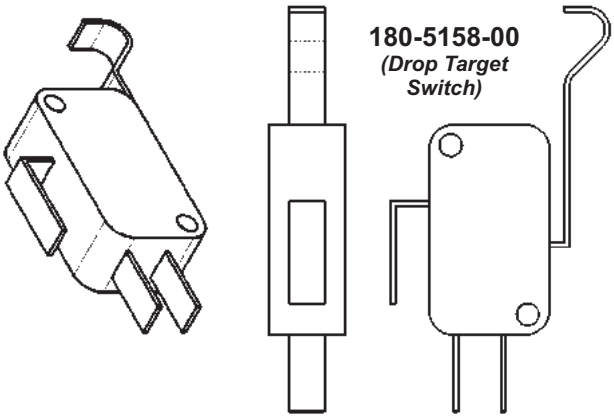

180-5158-00
(Drop Target Switch)

back to Page 58

Parts Identification & Location (The Pink Pages)

View **Drawings for Major Assemblies & Ramps**, in Section **4**, Chapter **2** of **2** (**Blue Pages**), Pages **81-104**.

Table of Contents & Overview

This section provides the part number and locations of most of the components in this Pinball Machine. These parts are arranged in 3 groups: **BACKBOX**, **CABINET** & **PLAYFIELD**
Note Pages 70-80: *All Posts, Nuts, Spacers, Rubber Parts, Sockets and Bulbs shown are drawn* ***Actual Size****. If no quantity is shown, that item is not used on this game (however, quantities and/or parts may change during production with or without notice).*

Optional Kits available through your Distributor:
Pinball Location Maintenance Standard & Deluxe Kits!
See Pages 63 or 64 for Part Number & more info!

Backbox 60
Speaker Panel 61
Cabinet 62
Cabinet Continued 63
P/F - Gen. Parts (Above) 64
P/F - Gen. Parts (Below) 65
P/F - Switches... (Above) 66
P/F - Switches... (Below) 67
P/F - ... Rails ... (Above) 68
Overview of ... Rails, ... 69
Playfield - Metal Posts ... 70
Posts (Loc. Map) & Nuts 71
Playfield - Hex Spacers 72
... Spacers (Loc. Map) 73
P/F - Plastic Posts ... 74
... & Spacers (Loc. Map) 75
P/F - Rubber Parts ... 76
P/F - Plastics Kit, & ... 77
... Sm. Sockets & Bulbs 78
... Lg. Sockets & Bulbs 79
... W.B. Sockets & Bulbs 80
The Blue Pages 81

Important: *Read all "Take Note:" items*

Sec. 4: Parts Id. ...

Not sold as an assembly, order the individual part(s) actually required.

NASCAR® Pinball Backbox Assembly, 505-6002-86-86 (Items 1-29)

‡ **Item 20, Button Hole Plug (Black)** *is the optional ToPS™ Access Hole; if removing for the Optional ToPS™ Kit, save with the game.*

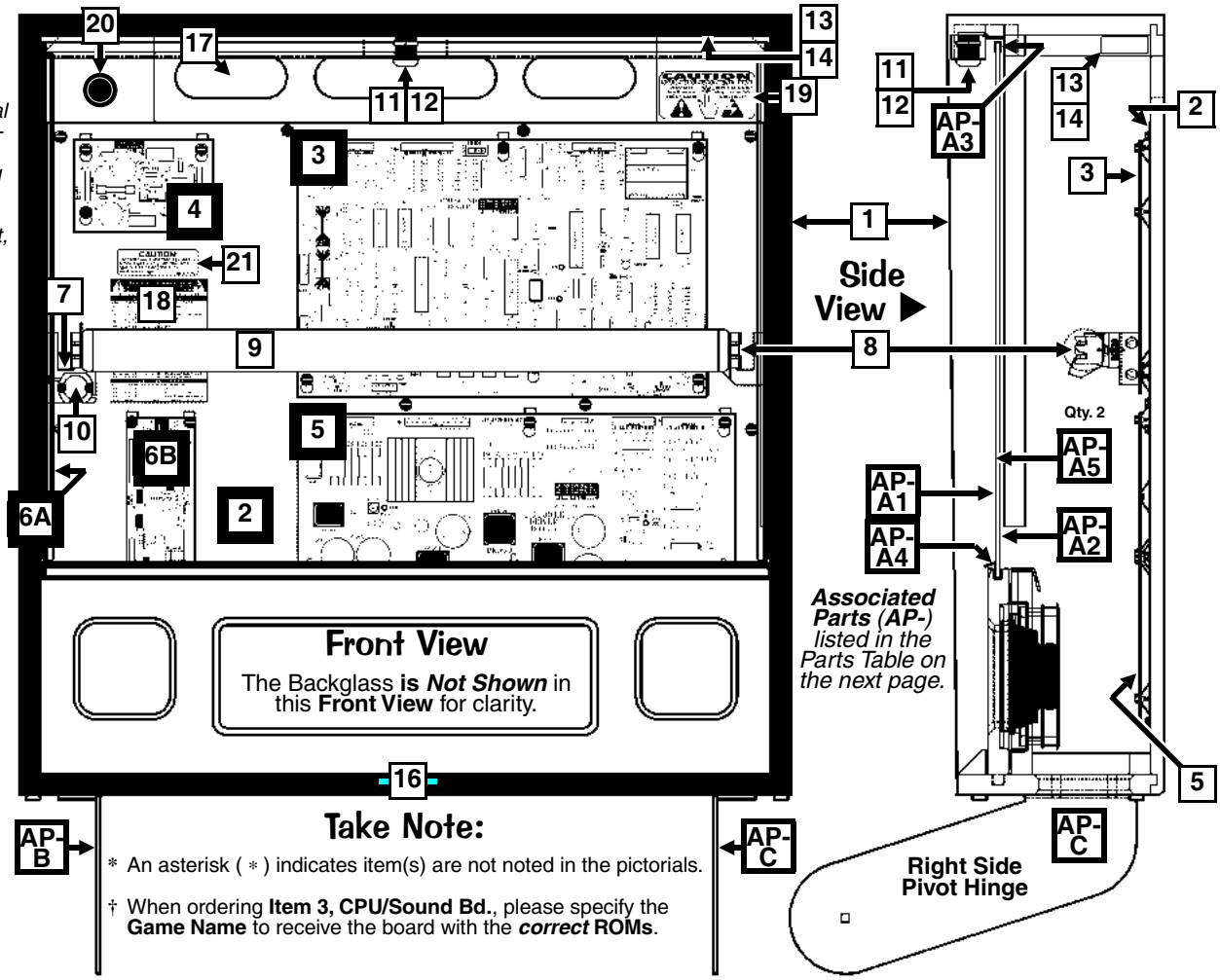

Take Note:

* An asterisk (*) indicates item(s) are not noted in the pictorials.

† When ordering **Item 3, CPU/Sound Bd.**, please specify the **Game Name** to receive the board with the ***correct*** **ROMs**.

Nr.	BACKBOX PARTS	QTY.	SPI PART Nr.
1	Backbox NASCAR® Screened No Parts	1	**525-5631-17-86**
	Item 1 Note: *Chrome T-Molding is installed and cannot be ordered separately.*		
2	PCB Metal Mounting Plate	1	535-5809-14
	Item 2 is secured to Item 1 by: #8 X 1/2" SHWH AB (Zinc) (Qty. 13) (234-5101-00) **and** #10 Washer 7/32" I.D. X .5" O.D. X 1/16" Thick (Qty. 4) (242-5003-00)		
3 †	CPU/Snd. Bd. **w/ATMEL Sound Processor**	1	**520-5300-00**
4	Display Power Supply Board	1	520-5138-00
5	I/O Power Driver Board *Rev. **G** or higher*	1	520-5137-01
	Items 3, 4 & 5 are secured to Item 2 by: #8-32 X 3/8" HWH MS (Qty. 19) (237-5903-00)		
6A	3X Trans. Drvr. Bd. **(UK/Special Apps.Only)**		520-5068-01
6B	ToPS™ Tournament Serial Interface (TSI) Board		520-5220-00
	optional** **Item 6A is required for UK Games** to support Auxiliary assemblies listed under the Coil Matrix of Q1-Q32; also used for **Special Applications** such as Ticket / Coin Dispensers used in conjunction with **optional** **Item 6B ToPS™ TSI Board.		
7	Fluorescent Light Bracket Assy. Left	1	515-6545-00
	Assembly Parts Included : Fluorescent Light Bracket Left (**535-7739-00**), Lamp Holder** *(Self-Locking)* (**077-5214-00**) **and** Starter Base *(with Leads)**** (**077-5213-00**).		
8	Fluorescent Light Bracket Assy. Right	1	515-6545-01
	Assembly Parts Included : Fluorescent Light Bracket Right (**535-7739-01**), Lamp Holder** (Self-Locking) (**077-5214-00**) **and** Starter Base *(with Leads)**** (**077-5213-00**). ** **secured by:** #6-32 X 5/8" PPH MS (Sems) Zinc (Qty. 1) (232-5203-00) *** **secured by:** #4-40 X 1/2" PPH MS (Sems) Zinc (Qty. 2) (237-5813-00)		
	Items 7 & 8 are secured to Item 1 by: #10-24 X 1-1/4" Carriage Bolt Sq. Neck (Qty. 2/per) (231-5012-00), #10-24 Keps Nut (Qty. 2/per) (240-5207-00) **and** 3/4" X 3" Reinforced Strapping Tape (Qty. 1, Sold in 12" Lengths only) (626-5040-00)		
9	Fluorescent Tube 24" (F20T9CW)	1	165-5061-00
10	Starter - Fluorescent (FS2 Light)	1	165-5011-01
11	Lock Mounting Plate	1	535-8128-01
12	Lock 5/8" Barrel, 3/4"ø, 1.5" Flat Cam	1	355-5055-00
	Items 11-12 are secured by: #8 X 5/8" TP Torx T20 (Qty. 4) (237-5947-00)		

Nr.	BACKBOX PARTS	QTY.	SPI PART Nr.
13	Ballast Mounting Plate	1	535-8657-00
14	Ballast *CU45Z-W 1/2" Core 120v 60 Hz 13W*	1	010-5015-00
	Items 13 & 14 are secured to Item 1 by: #6 X 5/8" SHWH AB (Zc) (Qty. 2) (234-5102-04) ***EU / UK Only Ordering Note:*** *Ballast, 5/8" Core 50/60 Hz (010-5015-01)*		
15*	*#1 Roto Lock Male (on Cabinet)*	*1*	*355-5006-01*
16	#1 Roto Lock Female *(R2-0002-02)*	1	355-5006-02
	Item 16 is secured by: #10-24 X 1-3/4" CBSN (231-5022-00), #10-24 Keps Nut (Qty. 2) (240-5207-00), #10-24 X 2" CBSN (231-5045-00), #10-24 Keps Nut (240-5207-00) **and** #10 Washer 7/32" ID X .5" OD X 1/16" (Qty. 5) (242-5003-00)		
17	Back Vent Grill 2-1/2" X 18"	1	545-5072-02
	Item 17 is secured by: Staple 5/16" (Qty. 23) (631-5000-00)		
18	Fuse Description Decal (Generic)	1	820-6152-02
19	"CAUTION - VERY HOT" Decal	1	820-6266-00
20‡	Button Hole Plug (Blk) **(Happ #52-6214-00)**	1	500-6566-00
21	Fuse Label (UL)	1	820-6143-00
22*	Backbox Date Label	1	820-5091-00
23*	Ribbon Cable, 20-Pin (4")	1	036-5000-04
	***Item 23 (20-Pin) connects the** CPU/Sound Board to the I/O Power Driver Board.*		
24*	Ribbon Cable, 26-Pin (40")	1	036-5001-40
	***Item 24 (26-Pin) connects the** CPU/Sound Board to the Display Controller Board.*		
25*	Display Cable *(Wiring Harness)*	1	036-5454-00
26*	Zip Cable Tie (Screw Down Style)	3	040-5005-00
	Item 26 is secured by: #8 X 7/8" PPH AB (Zinc) (Qty. 1/per) (232-5103-00)		
27*	Clamps: 1/4" (Dbl.) 1/2", 3/4" & 1" (Sng.)	11	040-5000-XX
	Items 26-27 are secured by: #8 X 1/2" SHWH AB (Zc.) (Qty. 1/per) (234-5101-00) ***Replace -XX with:*** **1/4"** use **-23** (Qty. 2); 1/2" use **-06** (Qty. 1); **3/4"** use **-08** (Qty. 2); **1"** use **-09** (Qty. 6)		
29*	Ground Strap (5") *(by Item 12)*	1	600-5006-05
30*	Braided Wire (1.5')	1	600-5001-00

Not sold as an assembly, order the individual part(s) actually required.

NASCAR® Pinball Speaker Panel Assy. for the Backbox, 515-6888-03-86 (Items 1-14)

and Assoc. Parts: Backglass Assembly & Pivot Hinges (Left & Right) (Items AP-A - AP-C)

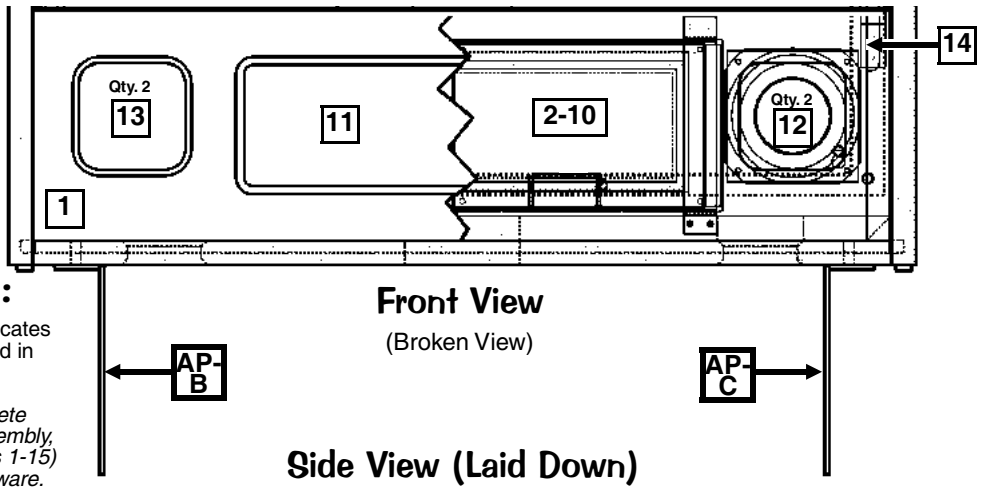

Take Note:

* An asterisk (*) indicates item(s) are not noted in the pictorials.

Ordering the complete Speaker Panel Assembly, 515-6888-03 (Items 1-15) will include all hardware.

Front View

(Broken View)

Side View (Laid Down)

For clarity, the below drawing ***does not show*** the speaker(s).

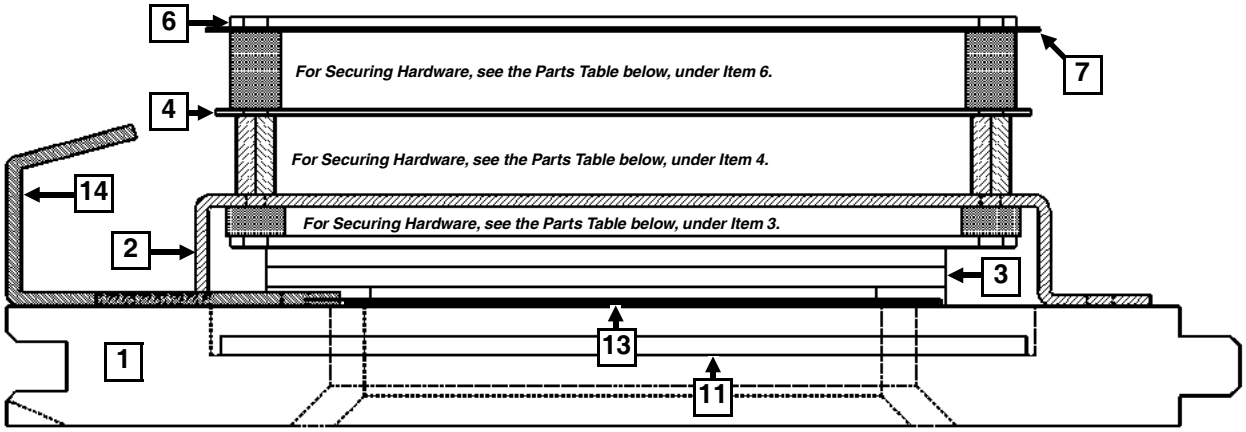

Nr.	SPEAKER PANEL PARTS	QTY.	SPI PART Nr.
1	Speaker Panel (Black Wood)	1	525-5515-00
2	Dot Matrix Disp. Bd. Mounting Bracket	2	535-8368-01
	Item 2 is secured to Item 1 by: #8 X 5/8" SHWH AB (Green) (Qty. 4/per) (234-5102-04)		
3	Dot Matrix Display Board 128 X 32	1	520-5052-00
	Item 3 is secured to Item 2 by *(at corners)*: 3/16" X 3/8" Spacer Gray (Qty. 4) (254-5000-18) **and** #6-32 X 1/2" SHWH Swage (Serr) Zinc (Qty. 4) (237-5976-03) **Item 3 is secured to Item 4 (at the top center) by:** 3/4" X 1/4" Hex Spacer #6-32 Tap (Qty. 1) (254-5008-04) **and** #6-32 X 1/4" PPH MS (Sems) Zinc (Qty. 1) (232-5200-00)		
4	Static Shield (Steel Plate)	1	535-6437-00
	Item 4 is secured to Item 2 by: 1/2" X 1/4" Hex Spacer #6-32 Tap (Qty. 4) (254-5008-03) **and** #6-32 X 1/2" PPH MS (Sems) Zinc (Qty. 2, on Left Side only) (232-5202-00)		
5*	Edge Protector - SPGS-1 *(on Item 4)*	1	545-5592-02
	Ordering Note: *"Item 5" is sold in 12" length. Required: **.67** Ft.*		
6	Display Controller Board FCC-FEB98	1	520-5055-03
7	RF Shield	1	820-5092-00
	Items 6 & 7 are secured to Item 4 by: 1/2" X 5/16" X .144 ID Spcr. (Qty. 3) (254-5014-00), #6-32 X 3/4" PPH MS (Sems) Zinc (Qty. 3) (237-5504-00), 1/2" X 1/4" Hex Spacer #6-32 (Qty. 1) (254-5008-03) **and** #6-32 X 1/4" PPH MS (Sems) Zinc (Qty. 2) (232-5200-00)		
8*	Ground Strap (25") *(on Items 4, 6, 12)*	4	600-5006-25
9*	Ribbon Cable, 14-Pin	1	036-5260-00
	Item 9 Note: *The 14-Pin cable connects the Dot Matrix Disp. Bd. to the Disp. Controller Bd.*		
10*	Foam 3/16" Thk. X 1/4" X 36"	6	626-5026-00
	Above Item 10 is self-adhesive. *Located behind Item 3. Sold in 12" Lengths only.*		
11	Plastic Shield (Display Cover)	1	545-5884-00
	Item 11 is secured to Item 2 by: #6 X 3/8" SHWH AB (Zinc) (Qty. 8) (234-5000-00)		
12	Speaker (Shld.) 4" 8Ω MG Elec #4060SH	2	031-5004-01
13	Speaker Grill (Chrome w/no Artwork)	2	535-8081-04

Nr.	SPEAKER PANEL PARTS	QTY.	SPI PART Nr.
14	Speaker Panel Hook Bracket	2	535-7009-02
	Items 12, 13 & 14 are secured by: #8 X 5/8" SHWH AB (Green) (**Item 12:** (Qty. 4/per); **Item 13:** (Qty. 4/per); **Item 14:** (Qty. 2/per) (234-5102-04)		

The Associated Parts ***AP-A*** *thru* ***AP-C*** *are also noted in the Backbox Assembly drawings on the previous page.*

ASSOC. PARTS **ARE NOT INCLUDED** WITH BACKBOX/SPKR. PANEL ASSY'S.

Nr.	ASSOCIATED PARTS	QTY.	SPI PART Nr.
AP-A1	Clear Backglass 25.906" X 19.187"	1	660-5038-02
AP-A2	**NASCAR® (MillerLite) Film Art***	1	**515-7252-00-86**
optional	**NASCAR® (RustyLogo) Film Art ***	1	**515-7252-01-86**
	*** Note:** *The **NASCAR® Backglass Film Art** must have the Official NASCAR Hologram Logo affixed.* ***It cannot be displayed without it!***		
AP-A3	Top Plastic Channel - 26"	1	545-5018-15
AP-A4	Bottom Plastic Lift Channel - 26-1/16"	1	545-5021-01
AP-A5	Plastic Edging (Left/Right) - 18-1/8"	2	545-5018-14
	Items AP-A3, -A4 & -A5 are secured to AP-A1 by: Taple (Double-Sided), 12" (Qty. 1) (626-5005-00) ***Note:*** *Only 6" required, sold in 12" lengths only.*		
AP-B	Pivot Hinge Left	1	535-7999-00
AP-C	Pivot Hinge Right	1	535-7999-01
	Items AP-B & AP-C are secured to Backbox by: 1/4"-20 X 1-1/4" C.B. Sq. Neck (Qty. 4) (231-5003-00), 1/4"-20 Flange Nut (Qty. 4) (240-5300-00) **and** Fend Washer 1/4" I.D. X 1" O.D. (Qty. 1) (242-5009-00) **Items AP-B & AP-C are secured to Cabinet by:** Spacer Hex Nut 1/2" O.D. - 1/4-20 X 1/2" TD (Black) (Qty. 1/per) (254-5042-00), Nylon Spacer (Black) (Qty. 1/per) (242-5084-00), 1/4-20 X 1/2" Carriage Bolt Sq. Neck (Black) (Qty. 1/per) (231-5072-00), Fend Washer 1/4" I.D. X 1" O.D. (Qty. 1/per) (242-5009-00) **and** 1/4"-20 Flange Nut (Qty. 1/per) (240-5300-00)		

Cabinet - Parts ■ & Switches □

For Backbox Parts see the previous two pages.

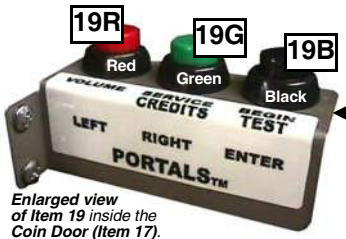

***Enlarged view of Item 19** inside the **Coin Door (Item 17)**.*
Buttons, Bracket & Decal sold separately.
*For usage, see **Portals Service Menu Introduction**, Section **3**, Chapter **1**, Page **8**.*

Take Note:

‡ **Item 11, Button Hole Plug (Blk) is the** *Optional Tournie Button Access Hole. If removing for the Optional Tournament Button, save with the game.*

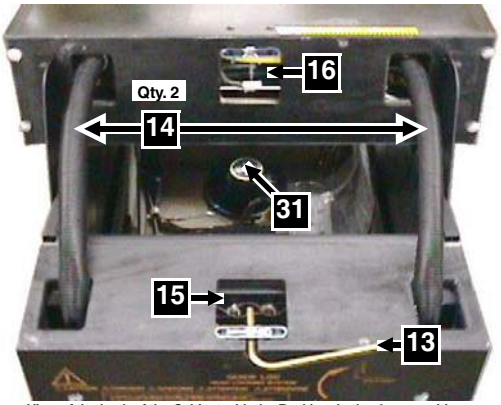

View of the back of the Cabinet with the Backbox in the down position.

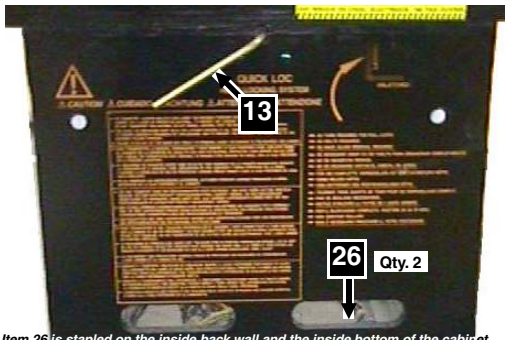

Item 26 is stapled on the inside back wall and the inside bottom of the cabinet.

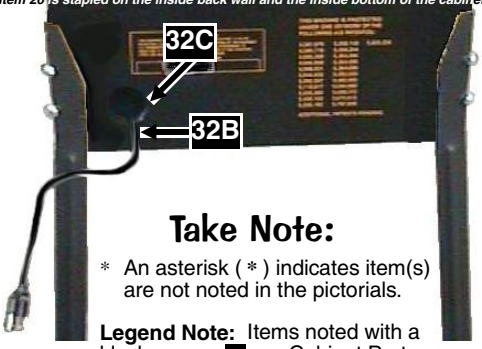

***Item 32F** (Power On/Off Switch) is located under the Cabinet (Front Right) directly below the Power Box.*

2 Qty. 4 — ***Item 2 Ordering Note:*** *Leg comes with Leveler. Leveler can be purchased separately. Leg cannot be ordered **WITHOUT** Leveler (see Parts Table below, **Item 2**).*

View of the Coin Door (Item 17) open.

Take Note:

* An asterisk (*) indicates item(s) are not noted in the pictorials.

Legend Note: Items noted with a black square ■ are Cabinet Parts. Items noted with a white square □ are Switches.

Nr.	CABINET PARTS	QTY.	SPI PART Nr.
1	NASCAR® Screened Cab. (No Parts)		**525-5395-15P-86**
2	Black Leg with Leveler Asm.	4	500-5921-50
	Item 2 is secured by: Leg Bolt Back Plate (**535-5703-00**) **and** Leg Bolt 3/8" X 16 X 2-1/2" Hex 5/8" Hd. (2/per) (231-5001-01) *Leg Leveler ONLY (3/8"-16 X 3") (500-5017-00).*		
3	Start Button (Red) + Lamp Assembly	1	500-6388-02
	Item 3 includes the Switch.* FOR SWITCH ONLY *see Item 25 on the Next Page.		
*	Diode Terminal Strip 2-Lug (810) Isolated	1	055-5203-00
	***Note:** 1N4004 Diodes (112-5003-00) are used in all Diode applications.*		
4*	#555 Wedge Base Bulb (Clear)	1	165-5002-00
	Item 4 is included with Item 3, for just a replacement Bulb use the above number.		
5	Ball Shooter (Plunger) Assembly	1	**500-6146-00-04N**
	FOR A BREAKDOWN OF PARTS SEE: Sec. 4, Chp. 2, Drawings for ... Assemblies...		
6	Flipper Button (Red) Assembly	2	500-5026-32
	Item 6 is secured by: Pal Nut for Flipper Button (Metal) (Qty. 2/per) (240-5003-01) **and is fitted with:** O-Ring 11/32" X 7/32" X 1/16" (Qty. 1/per) (545-5850-00) **Item 6 *DOES NOT* include the Switch Asm. FOR SWITCH ONLY *see Item 23 on the Next Page.***		
7	Rear Glass Channel 20-3/8" Length	1	545-5038-00
8	Plastic Channel 42-5/8" Lg. (Left/Rt.)	2	545-5017-00
9L	Side Armor (Left) with Button Guard	1	535-9596-00
9R	Side Armor (Right) with Button Guard	1	535-9596-01
	Items 9L & 9R are secured @ front & side by: Pem Stud 1/4 X 1" Flange Head Black (Qty. 1/per) (237-6116-01), 1/4-20 Flange Nut (Qty. 1/per) (240-5300-00) **and** #8 X 5/8" T20 Tamper Proof Black (Qty. 5/per) (237-5947-00); **@ rear (backbox) by:** #10-24 X 1" Sq. Neck Carrg. Bolt Black (Qty. 1/per) (231-5021-00) **and** #10-24 Hex Nut (Qty. 1/per) (240-5202-00)		

Nr.	CAB. PARTS & SWITCHES	QTY.	SPI PART Nr.
10	Front Molding (Black) Sq. Button Hole	1	**500-6882-00-00**
	Item 10 requires: Self-Adhesive Foam Rubber 3/8" X 3/16" X 20-3/8" (3 Ft.) (626-5001-00). ***Ordering Note :** Can only be used in conjunction with new Lockdown Asm. 500-6881-00 (Item 21)*		
11‡	Button Square Hole Plug (Black)	1	500-6883-00
12	P/F Glass (Tmprd.) 21" X 43" X 3/16"	1	660-5001-00
13	Hex Key Allen Wrench 5/16"	1	777-0001-00
14	Corrugated Tubing Black **1"ø X 2.6' Lg.**	1	605-5008-03
	*Above Item **14** covers the Cables Wiring Harnesses going into the Backbox from the Cab.*		
15	#1 Roto Lock Male (R2-0055-02)	1	355-5006-01
	Item 15 is secured by: #10-24 X 1-3/4" Carr. Bolt Sq. Neck (Qty. 2) (231-5022-00), #10-24 N.S. Nut (Qty. 2) (240-5206-00) **and** #10 Washer 7/32" X .5" X 1/16" (Qty. 2) (242-5003-00)		
16	*#1 Roto Lock Female (on Backbox)*	*1*	*355-5006-02*
17	Coin Door (with Validator) USA only	1	500-5018-172
	Item 17 is secured by: 1/4"-20 X 1-1/4" Carriage Bolt Sq. Neck (Qty. 4) (231-5003-00) 1/4"-20 Flange Nut (Qty. 4) (240-5300-00) **and** Fend Washer 1/4" I.D. X 1" O.D. (Qty. 3) (242-5009-00) ***Note:** For Coin Door other than USA call Technical Support for SPI Part Nr.*		
18	Coin Door Sw. (USA) (Happ Control)	2	180-5024-**01**
	ALT. SWITCHES **18:** Coin Door Switch (USA) (Coin Control) (**180-5024-00**) **18J:** Coin Door Switch (¥ Japan) (**180-5091-00**)		
19	Bracket for below Portals™ Switches	1	535-6860-03
	SWITCHES **19B:** Push-Button Portals™ Switch (**Black**) (**180-5192-00**) **19R:** Push-Button Portals™ Switch (**Red**) (**180-5192-02**) **19G:** Push-Button Portals™ Switch (**Green**) (**180-5192-04**)		
	***Ordering Note:** Securing hardware for switches included. For Decal Kit, see Page **69**.*		

Parts Table & Views continue on the next page.

Cabinet - Parts ■ & Switches □ Continued

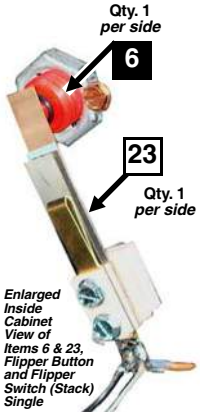

Enlarged Inside Cabinet View of Items 6 & 23, Flipper Button and Flipper Switch (Stack) Single

Enlarged Inside Cabinet View of Items 32 (Items 32A, 32D & 32E) Power Box, Service Outlet, Fuse Holder & Fuse

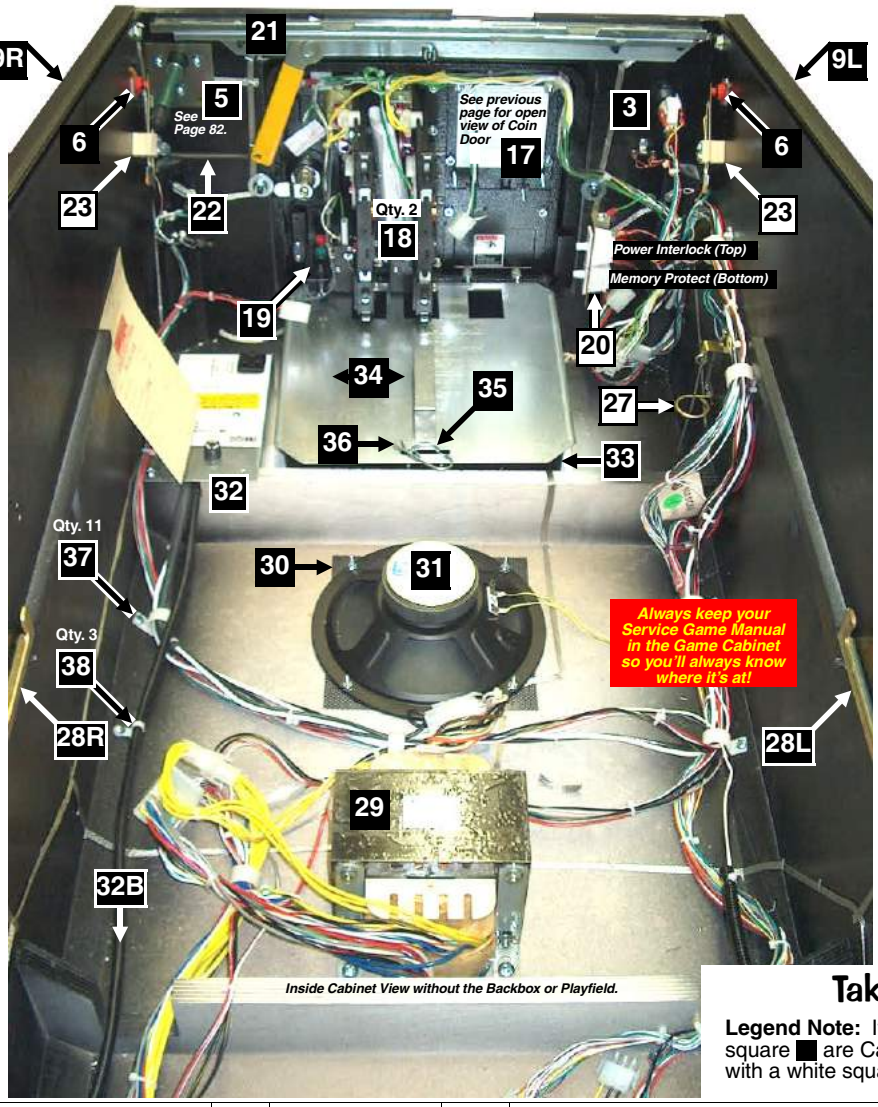

Inside Cabinet View without the Backbox or Playfield.

Enlarged Inside Cabinet View of Items 3, 4 & 25, Start Button Start Button Switch (Bulb inside)

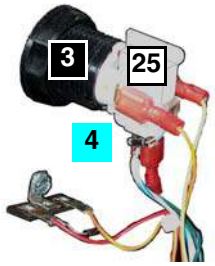

Enlarged Inside Cabinet View of Item 27 (27A, 27B, 27C & 27D), Plumb Bob Tilt Switch.

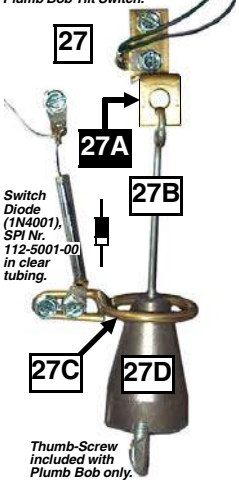

Take Note:

Legend Note: Items noted with a black square ■ are Cabinet Parts. Items noted with a white square □ are Switches.

Nr.	CAB. PARTS & SWITCHES	QTY.	SPI PART Nr.
	Parts Table & Views continue on the previous page.		
20	Power Interlock-Memory Protect Switch Asm.	1	500-5808-00
	Assembly Parts Included : Mounting Bracket (**535-6958-00**), Power Interlock (Playfield) Switch (**TOP**) (**180-5136-00**) **and** Memory Protect Switch (**BOTTOM**) (**180-5000-01**) **Item 20 is secured to Cabinet by:** #8 X 1/2" SHWH AB (Zinc) (Qty. 2) (234-5101-00)		
21	Front Molding Lockdown Asm.	1	500-6881-00
	Item 21 is secured by: #10-24 X 1-1/4" Carr. Bolt (Qty. 2) (231-5012-00), #10-24 Keps Nut (Qty. 2) (240-5207-00), #8 X 1/2" SHWH AB Zinc (Qty. 1) (234-5101-00) **and** #10 Washer 7/32" ID X 1/2" OD X 1/16" (Qty. 1) (242-5003-00)		
22	Lockdown Spring *(connected to handle)*	1	265-5008-00
23	Flipper Switch Single *(Paliney Contact)*	2	500-6889-01
	Assembly Parts Included : Flipper Switch Stack Single *(Paliney Contact)* (**180-5160-01**) **and** Capacitor - Ceramic .05 Mfd 25 volt (**130-5001-00**) **Item 23 is secured to Cabinet by:** #6 X 1-1/4 SHWH AB (Zinc) (Qty. 2/per) (**237-5959-00**)		
25	Start Button Switch **(ONLY)**	1	180-5174-00
26	Grills 2-1/2" X 18" *(on Back & Bottom)*	2	545-5072-02
27	Plumb Bob Tilt Switch *(made up of 4 individual parts)*		
27A	Bracket for Hanger Wire	1	535-5221-00
27B	Hanger Wire	1	535-5319-02
27C	Contact Wire Form	1	535-7563-01
27D	Plumb Bob Weight *(includes Thumb-Screw)*	1	535-5029-00
	Item 27A is secured to Cabinet by: #8 X 1/2" SHWH AB (Zinc) (Qty. 4) (234-5101-00)		
28L	Slide & Pivot Support Bracket (Left)	1	535-5989-00
28R	Slide & Pivot Support Bracket (Right)	1	535-5990-00
	Items 28L & 28R are secured by: #10-24 X 1-1/4" Carriage Bolt Square Neck Black (3/per) (231-5012-00) **and** #10-24 KEPS Nut (3/per) (240-5207-00)		
29	Transformer 5.7v AC *(with Ballast Winding)*	1	010-5012-01
	Item 29 is secured by: 1/4"-20 X 5/8" PPH MS (Zinc) (Qty. 4) (237-5854-00) **and** 1/4" Split Lock Washer (Qty. 4) (244-5000-00)		
30	Speaker Grill 7" X 7"	1	545-5072-03

Nr.	CAB. PARTS & SWITCHES	QTY.	SPI PART Nr.
31	Speaker 8" ø Round 8010 4Ω	1	031-5007-00
	Items 30 & 31 are secured by: #6-32 X 1-1/4" Fin Shank Screw (Qty. 4) (237-5883-00) **and** #6-32 Keps Nut (Qty. 4) (240-5008-00)		
32	Power Input Box Assembly	1	515-5360-07
	Assembly Parts Included : Power Box *(No Parts)* Mounting Frame (**535-5932-00**), Line Filter (**150-5000-00**), Varistor* TNR159211KM (Domestic) (**150-5001-00**), Varistor TRM15G431KM (Euro) (**150-5002-00**), On/Off Switch Bracket (**535-8318-00**), Power Box Decal (**820-6123-03**) ***and the following (noted in pictures above):***		
32A	Service Outlet (for USA)	1	180-5008-01
32B	Line Cord 10' ROJ 3" & Ring Terminal	1	034-5000-10
32C	Recessed (Black) Cup *(rear of Cab.)*	1	545-5122-00
	Snap Bushing 9/16" (White)	1	280-5001-01
32D	Fuse 8 Amp 250v Slo-Blo (Domestic)	1	200-5000-05
	Fuse 5 Amp 250v Slo-Blo (Foreign)	*(2)*	*(200-5003-00)*
32E	Fuse Holder	1	205-5001-00
32F	Switch, On/Off Rocker **APEM R2101C5NBB**	1	180-5001-03
33	Cash Box Plastic Bottom	1	545-5090-00
34	Cash Box Cover (Validator)	1	535-5013-03
35	Cash Box Lock Bracket (U-Wire)	1	535-7562-00
	Item 35 is secured by: #8 X 3/4 PFH (Zinc) (Qty. 2) (237-5822-00)		
36	Large Hair-Pin Clip	1	535-7772-00
37	3/4" Clamp (Single)	11	040-5000-08
	Items 26-27 are secured to Item 1 by: #8 X 1/2" SHWH AB (Zc.) (Qty. 1/per) (234-5101-00)		
38	Zip Cable Tie (Screw Down Style)	3	040-5005-00
	Item 38 is secured by: #8 X 7/8" PPH AB (Zinc) (Qty. 1/per) (232-5103-00)		
39†	Meter +12v DC ***with*** Bracket ***Optional***	0	**G-0053-013-102**
40†	Meter +12v DC *No Bracket* ***Optional***	0	**G-0053-013-102A**

† Meters (Diode included) are optional and were not included in this Pinball Machine (each optional meter is sold separately). More information? Call Technical Support.

P/F Top - Misc. Parts ☐ and Brackets ■

Nr.	THE PLAYFIELD	QTY.	SPI PART Nr.
PF	P/F Screened **w/** Inserts & **NO** Parts	1	830-5100-86
	P/F Complete **w/** Inserts & **ALL** Parts	1	**505-6004-86-86**

Nr.	MISC. PARTS (ABOVE)	QTY.	SPI PART Nr.
1	Arch (Black) ***Unique This Game Only***	1	**535-9681-00**
	Item 1 is secured by: #10-32 X 5/16" PFH U/C MS (Zinc) (Qty. 2) (237-6013-00) **and to the P/F @ front tabs by:** #8 X 1/2" SHWH AB (Zinc) (Qty. 3/per) (234-5101-00) *For Decals, see **P/F Top - Plastics Kit, Decals & Mylar Kits**, Page **69**.*		
2	Instruction Card (USA) Nascar®		755-5186-00-Y
	Note: *Visit **www.sternpinball.com** for a PDF copy of the Game Instruction Card which will also have any translated Instruction Cards made for this game. Find Game Link or Archives.* ***Spanish*** *755-5186-**02**-Y;* ***French*** *755-5186-**05**-Y*		
3A	Coin Card (2-Sided) Yellow Stock	1	755-5400-00-Y
3B	Coin Card (2-Sided) Yellow Stock	1	755-5400-02-Y
	*For Coin Card views, see below or **Appendix J** (back of manual).* ***Ordering Note:*** *If this is a non-US Game, Coin Card(s) Part Numbers provided will differ.*		
4	Mini-Mars Lite Cover **(Screw-On)** (Yel.)	2	550-5031-06
	Item 4 is secured on Plastic by: #6-32 X 1/2" PPH MS (Sems) Zinc (Qty. 2) (232-5202-00) and #6-32 Nylon Stop Nut (Qty. 2) (240-5005-00)		
5	Bubble Level Assembly	1	500-6815-00
	Assembly Parts Included **: Level** .8mm Empire #0224 (**545-6001-01**) or **Level Mount** (**545-6068-00**). **Flange secured by:** #6-32 X 1/4" PPH MS (no Sems) Zinc (237-5500-00) **and** #6-32 Keps Nut (240-5008-00) **Item X is secured to the wood rail by:** #6 X 1/2" HWH AB (Zinc) Red (Qty. 2) (234-5001-02)		
6	Pinball (Steel) 1 1/16" ø	6	260-5000-00
7*	Plug-Cap (3/16") Black Plastic	**0**	545-5232-01
	Note: *Item **7** should plug hole if a Center Post (@ Drain) is used, then removed.*		

Nr.	MISC. BRACKETS (ABOVE)	QTY.	SPI PART Nr.
8	Bracket, Ball Trough Stop	1	535-9743-00
	Item 8 is secured above the Playfield in front of the Coil Mounting Bracket of the 4-Ball Trough (Item 2, Page 83) by: #6 X 1/2" HWH AB (Zinc) Red (Qty. 2) (234-5001-02)		
9®	Bracket, Vertical Plastic Mounting	2	535-8941-00
	Note: *Joins Plastics **830-6035-06 + 830-6036-35***		
10®	Bracket, Vertical Plastic Mounting	9	535-8941-04
11®	Bracket Long, Plastic Cover Mounting	1	535-9744-00
	Note: *Joins Plastics **830-6035-11 + 830-6035-27**, **830-6035-05 + 830-6035-18**, **830-6047-19 + 830-6047-20** and **830-6036-31 + 830-6036-32 + 830-6036-33*** **Items 9®-11® are secured to each Plastic at hole by:** Rivet, 1/8" ø X 5/32" Long (Qty. 1/per) (249-5009-00) *Replacement may require Rivet, 1/8" ø X 3/16" Lg (Qty. 1/per) (249-5001-00)* **and** #6 Riveting Lock Washer (Qty. 1/per) (246-5000-00) *For Plastics (Screened & Clear), see **P/F Top - Plastics Kit, Decals & Mylar Kits**, Page **69**.*		
12	Bracket, Ramp Mounting	2	515-6508-00
	Item 12 is secured to the Wood Rails by: #6 X 1/2" PTH A (Zinc) (Qty. 2) 237-5809-00		
13	Bracket, Playfield Hanger	2	535-8385-00
	Item 13 is secured to the Playfield by: #8-32 X 7/8" HWH MS Zinc (Qty. 2/per) (237-5890-00) **and** #8-32 T-Nut (Qty. 2/per) (240-5101-00)		
14L	Bracket, Back Panel Mounting (Left)	1	535-9645-00
14R	Bracket, Back Panel Mounting (Right)	1	535-9645-01
	Items 14L & 14R are secured above the Playfield by: #8-32 X 5/8" SHWH Ser. Swage (Zinc) Wax (Qty. 2/per) (237-5975-03) **and** #8-32 T-Nut (Qty. 2/per) (240-5101-00) *For Back Panel & Parts, see **Drawings for Major Assemblies & Ramps**, Page **103**.*		
15A	Plate (Bracket) *for the Newton Ball*	1	535-9523-00
15B	Bracket (Wire Form) Ball Retention	1	535-9522-00
	Items 15A-15B are secured by: #8 Washer (Qty. 1/per) (242-5005-00) **and** #8-32 Nylon Stop Nut (Qty. 1/per) (240-5102-00)		

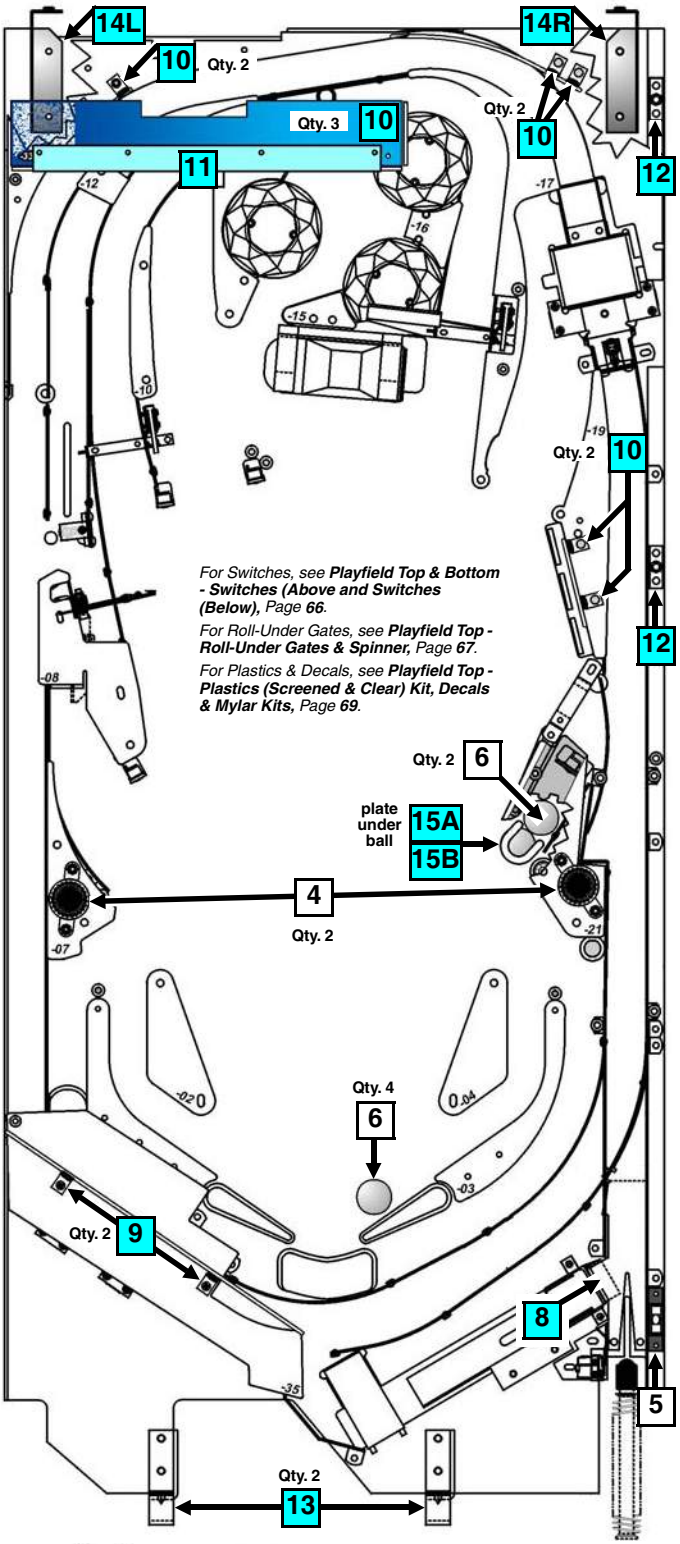

Optional Kits available through your Distributor:

Pinball Location Maintenance Standard Kit: 502-6002-86

Kit includes : *8 oz. Novus Wax #2 Fine (Red) (**675-0003-01**), Cloth, Rubber Rings (used above playfield), Bulbs (Bulb quantities vary and is limited to 25 per type), Fuses (5/per type) and 4 Pinballs.* ***Note:*** *Quanties, sizes and contents subject to change without notice.*

Pinball Location Maintenance Deluxe Kit: 502-6003-86

Deluxe Kit includes : *Pinball Location Maintenance Standard Kit as described plus a quanity of Flipper Rebuild Kits.* ***Note:*** *Quantity varies which equals the same quantity of flippers used in this game.* ◀ **THIS GAME KIT INCLUDES (2) FLIPPER REBUILD KITS** ◀

See Appendix J at the back of this manual for all current Cards (USA, Canada, Euro & Int'l) available through your distributor or download via our website (see the back cover of this game manual).

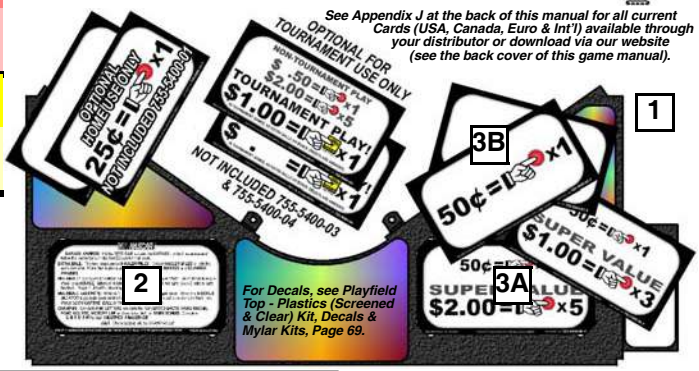

Take Note:

Legend Note:
Items noted with a white square ☐ are Misc. Parts (Above).
Items noted with a cyan square ■ are Misc. Brackets (Above).

Playfield Bottom - Miscellaneous Parts ■ and Brackets ■

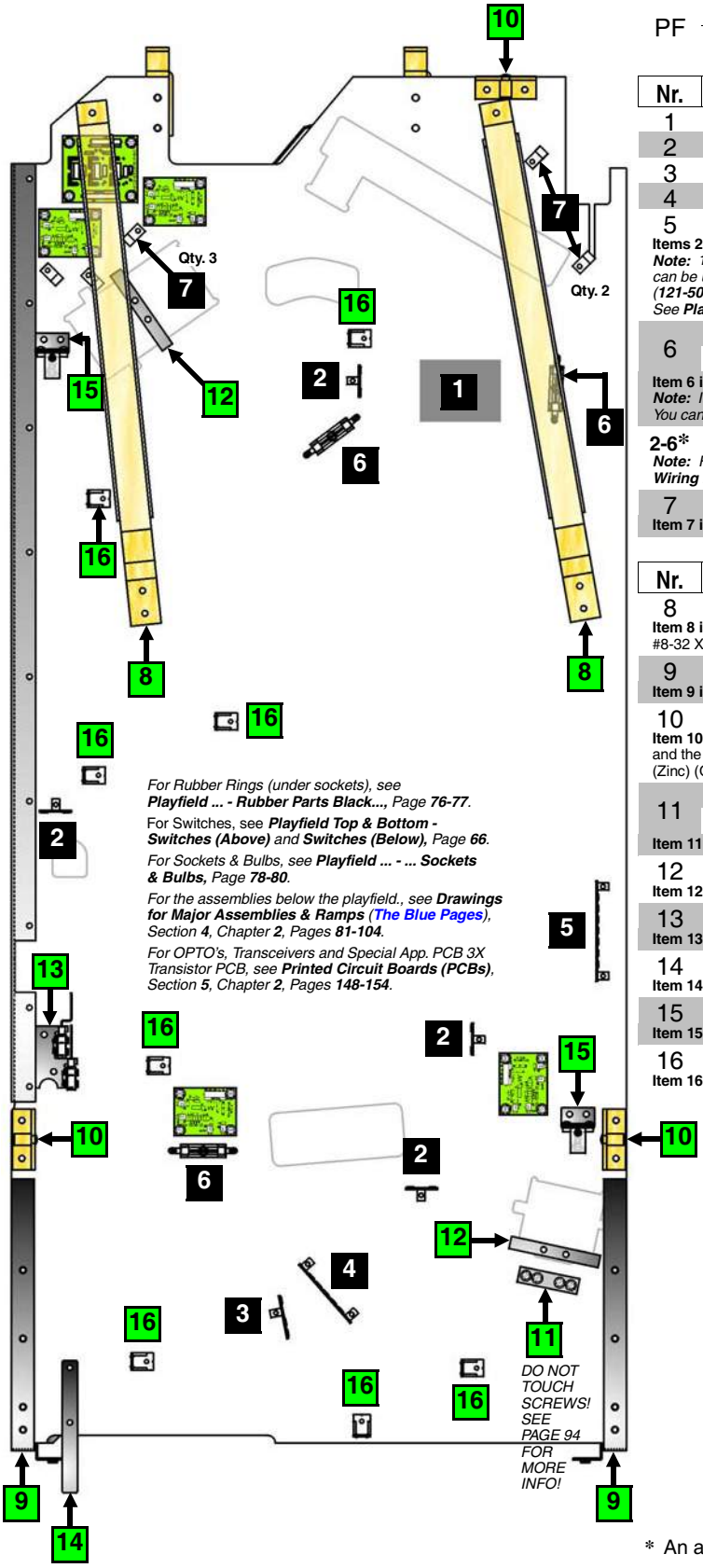

Nr.	THE PLAYFIELD	QTY.	SPI PART Nr.
PF	P/F Screened **w/** Inserts & **NO** Parts	1	830-5100-85
	P/F Complete **w/** Inserts & **ALL** Parts	1	**505-6004-85-85**

Nr.	MISC. PARTS (BELOW)	QTY.	SPI PART Nr.
1	Insulation Fiche Paper **(under Right Flipper)**	1	545-5721-00
2	Diode Terminal Strip 2-Lug (810) Isolated	4	055-5203-00
3	Diode Terminal Strip 3-Lug (813) Isolated	1	055-5204-03
4	Diode Terminal Strip 5-Lug (824) Isolated	1	055-5204-05
5	Diode Terminal Strip 7-Lug Isolated	1	055-5204-07
Items 2-5 are secured by: #6 X 3/8 HWH AB Zinc (Qty. 1-2/per) (234-5000-00). ***Note:*** *1N4004 Diodes (**112-5003-00**) are used in all Diode applications. 1N4001 Diodes can be used for Switches and/or Lamps.* ***Current Limiting Resistor (390Ω 1/2 Watt) (121-5028-00)*** *is located on one Diode Terminal Strip 2-Lug for the Fish LED Wiring. See **Playfield Terminal Strips, Fuses & Misc. Wiring ...**, Section **5**, Chapter **2**, Page **111**.*			
6	3A 250v Slo-Blo Fuse	3	200-5000-08
	Fuse Clip Holder (Socket)	3	205-5000-01
Item 6 is secured by: #6 X 1/2" PPH AB (Qty. 1/per) (237-5805-00) ***Note:*** *Item **6**, Fuse Clip Holder (Socket) 205-5000-01 is part of a set of 12 (205-5000-12). You can order them as individuals (...-01) or a set of 12 (...-12).*			
2-6*	Diode Terminal Strip/Fuse Decals A-G	1	820-6221-86
Note: *For Decal Descriptions & Locations, see **Playfield Terminal Strips, Fuses & Misc. Wiring Descriptions & Locations,** Section **5**, Chapter **2**, Page **111**.*			
7	1/4" Clamp (Single)	5	040-5000-03
Item 7 is secured by: #8 X 1/2" SHWH AB (Zinc) (Qty. 1/per) (234-5101-00)			

Nr.	MISC. BRACKETS (BELOW)	QTY.	SPI PART Nr.
8	Playfield Support Slide Bracket	2	535-6862-02
Item 8 is secured by: #8 X 1/2" SHWH AB (Zinc) (Qty. 2/per) (234-5101-00) **and** #8-32 X 5/8" HWH Swage (Serr) Zinc (Qty. 1/per) (237-5975-03)			
9	Edge Slide Bracket (Extended)	2	535-5988-01
Item 9 is secured by: #4 X 1/2" PFH (Zinc) (Qty. 5/per) (237-5840-00)			
10	Pivot Pin Bracket Welded Assembly	3	500-5329-03
Item 10 is secured by: #8-32 X 5/8" HWH Swage (Serr) Zinc (Qty. 2/per) (237-5975-03) and the 1 on the front to prevent Coin Door Interference is secured by: #8 X 1/2" SHWH AB (Zinc) (Qty. 2/per) (234-5101-00)			
11	Bracket, Magnet Trough Adjustment	1	515-7544-00
	Adjustment Scr. #8-32 X 3/4" SHWH	2	237-6010-00
Item 11 is secured below the P/F by: #8 X 1/2" SHWH AB (Zinc) (Qty. 2) (234-5101-00)			
12	Channel Mounting Bracket	2	535-9504-00
Item 12 secures Magnet Assemblies by: #8-32 Nylon Stop Nut (Qty. 2/per) (240-5102-00)			
13	Switch Mounting Bracket, 2-Switch	1	535-9630-00
Item 13 is secured below the P/F by: #8 X 1/2" SHWH AB (Zc.) (Qty. 2) (234-5101-00)			
14	Bracket, Retention *(for Kicker Braket)*	1	535-9754-00
Item 14 is secured by: #8 X 1/2" SHWH AB (Zinc) (Qty. 2) (234-5101-00) Also see Pg. 94.			
15	OPTO Single-Mounting Bracket	2	535-9400-00
Item 15 is secured below the P/F by: #8 X 1/2" SHWH AB (Zc.) (Qty. 2/per) (234-5101-00)			
16	Tie Post 3.5" (Ladder), White Plastic	8	545-5253-01
Item 16 is secured by: #6 X 5/8" SHWH AB (Zinc) (Qty. 1/per) (234-5002-00)			

Take Note:

* An asterisk (*) indicates item(s) are not noted in the pictorials.

Legend Note:
Items noted with a black square ■ are Miscellaneous Parts (Below).
Items noted with a green square ■ are Misc. Brackets (Below).

Playfield Top & Bottom - Switches (Above) □ and Switches (Below) ■

Nr.	SWITCHES	QTY.	SPI PART Nr.
A-#	Roll-Over Switch *(Left Mount Style)* *Switch Matrix Numbers **57** & **61***	2	500-6227-01
B-#	Roll-Over Switch *(Right Mount Style)* **A-# & B-# Brackets secured by:** #6 X 1/2" SHWH AB (Zinc) (Qty. 2/per) (234-5001-02) *Switch Matrix Numbers **25**, **26**, **58** & **60***	4	500-6227-02
C-38	Switch & Target Asm. Square (Yellow) ***Assembly includes :*** Switch & Square Target (Yellow) Only Sub-Asm. (**515-5162-06**), Switch Mounting Bracket (**535-6896-00**), Switch Back Plate (**535-6452-00**) **and** Foam Pad (**626-5029-00**) **Bracket secured to Playfield by:** #8 X 1/2" SHWH AB (Zinc) (Qty. 2) (234-5101-00) *Switch Matrix Number **38***	1	500-5232-06
D-36	**Switch & Sq. Target (Yel.)** ***Only Sub-Asm.*** *Switch Matrix Number **36*** ***Switch Note:*** *Either target hit closes Switch 36.*	2	515-5162-06
E-#	Switch & Target Asm. Narrow (Yellow) ***Assembly includes :*** Switch & Narrow Target (Yellow) Only Sub-Asm. (**515-5967-06**), Switch Mounting Bracket (**535-6896-00**), Switch Back Plate (**535-6452-00**) **and** Foam Pad (**626-5029-00**) **Items D-36-E-# secured to Playfield by:** #8 X 1/2" SHWH AB (Zinc) (Qty. 2) (234-5101-00) *Switch Matrix Numbers **43**, **44** & **45***	3	500-5857-06
F-16	Switch *(for Shooter Lane)* ***Associated Part Not Included :*** Switch Mounting Bracket (**535-9742-00**) **Bracket secured to Playfield by:** *#8 X 1/2" SHWH AB (Zinc) (Qty. 2) (234-5101-00)* *Switch Matrix Number **16***	1	180-5200-00
G-28	Switch (No Side Bend Actuator) *Switch Matrix Number **28***	1	180-5178-00
H-27	Switch (Medium Side Bend Actuator) *Switch Matrix Number **27*** ***Associated Part Not Included :*** Switch Mounting Bracket (**535-9630-00**) *for Sws. 27 & 28* **Bracket secured to Playfield by:** #8 X 1/2" SHWH AB (Zinc) (Qty. 2) (234-5101-00)	1	180-5179-00
i-#	Sw. (1¼" Actuator) *(Car, Spinners & Ramp)* **Item I-# is secured by:** *Same screws which secures the Sw. Protect Plate & Plastic Spacer* *Switch Matrix Numbers **24**, **33**, **40** & **42***	4	180-5010-04
J-#	Switch Asm., Stack (Blade) *(for Pops)* ***Assembly Parts Included :*** Switch (**180-5015-04**), Sw. Mounting Bracket (**535-7342-00**), Spoon Actuator (**545-5610-02**), Sw. Body Protect Plate (**535-7344-00**), Diode 1N4004 (Qty. 1/per) (**112-5003-00**) **and** #6-32 X 3/4" HWH (Zinc) (Qty. 2/per) (**237-5976-05**) **Bracket secured to Playfield by:** #8 X 1/2" SHWH AB (Zinc) (Qty. 2/per) (234-5101-00) *Switch Matrix Numbers **49**, **50** & **51***	3	515-6459-09
K-#	Switch (Heavy Duty) Y-Actuator *Switch Matrix Numbers **29**, **30** & **52***	3	180-5116-01
L-#	Switch (Roller Actuator, Lite-Force) ***Associated Parts Not Included :*** Heat Shrink Tubing 1/8" ø PUI-24 (Qty. 1" per) (**605-5006-00**) **and** Diode 1N4004 (Qty. 1/per) (**112-5003-00**) **Item L-# is secured by:** #2-56 X 1/2" Unslt HWH #4 Hex TR3 Blk (Qty. 2/per) (237-5937-02) *Switch Matrix Numbers **11**, **12** & **13***	3	180-5119-02
M-#	Dual OPTO TRANS PC Board Asm. ***Assembly Parts Included :*** Dual OPTO Trans. PCB (Qty. 1) (**520-5173-00**), OPTO PCB Tube Spacer (Brass) (Qty. 3) (**530-5308-02**) **and** Rubber Grommet (Qty. 3) (**545-5518-00**) **Item M-# is secured by:** #6-32 X 5/8" HWH Swage (Serr) Zinc (Qty. 3/per) (237-5976-04)	1	515-0173-00
N-#	Dual OPTO REC PCB Assembly ***Assembly Parts Included :*** Dual OPTO Rec. PCB (Qty. 1) (**520-5174-00**), OPTO PCB Tube Spacer (Brass) (Qty. 3) (**530-5308-02**) **and** Rubber Grommet (Qty. 3) (**545-5518-00**) **Item N-# is secured by:** #6-32 X 5/8" HWH Swage (Serr) Zinc (Qty. 3/per) (237-5976-04) *Switch Matrix Numbers **14** & **15*** ***Switch Note:*** *Both PCBs required per switch.*	1	515-0174-00
O-#	OPTO Transceiver PCB Assembly *Switch Matrix Numbers **20**, **21**, **32**, **34**, **35**, **37**, **47** & **48*** ***Switch Note:*** *1 pair per switch. For a break-down of parts, wiring & schematics, see **Printed Circuit Boards (PCBs)**, Section **5**, Chapter **4**, Pages **148-151**.*	16	500-6775-00
P-#	Switch (End-of-Stroke), Stack (Blade) **Item P-# is secured by:** #6-32 X 5/8" HWH Sw (Sr) Zinc (Qty. 2/per) (237-5976-04) *Dedicated Switch Numbers **DS-2** & **DS-4***	2	180-5149-00
Q-#	Switch, Stack (Blade) *(for Slings)* ***Associated Parts Not Included :*** Switch Body Protect Plate (Qty. 1/per) (**535-5045-00**) **and** Diode 1N4004 (Qty. 1 for every 2 connected together) (**112-5003-00**) **Item Q-# is secured by:** #6-32 X 5/8" HWH Swage (Ser.) Zinc (Qty. 2/per) (237-5976-04) *Switch Matrix Numbers **59** & **62*** ***Switch Note:*** *1 pair per switch.*	4	180-5054-00
R-#	Switch *(for Drop Target)* **Item R-# is secured by:** #4-40 X 5/8" Slotted HWH C (Zinc) Wax (Qty. 2) (237-5945-00) *Switch Matrix Numbers **17**, **18** & **19***	3	180-5158-00
S-23	Switch *(behind Back Panel on Ramp)* *Switch Matrix Numbers **23***	1	180-5057-00

Switches G-28, H-27, I-# and K-# above also requires :
Switch Body Protect Plate (Qty. 1/per) (**535-6539-00**), Diode 1N4004 (Qty. 1/per) (**112-5003-00**) **and** #2-56 X 1/2" Unslt Serr HWH #4 Hd TR3 Black (Qty. 2/per) (**237-5937-02**) ***or*** #2-56 X 7/16" MS Sems (Zinc) (Qty. 2/per) (**237-5872-01**) <Item F-16

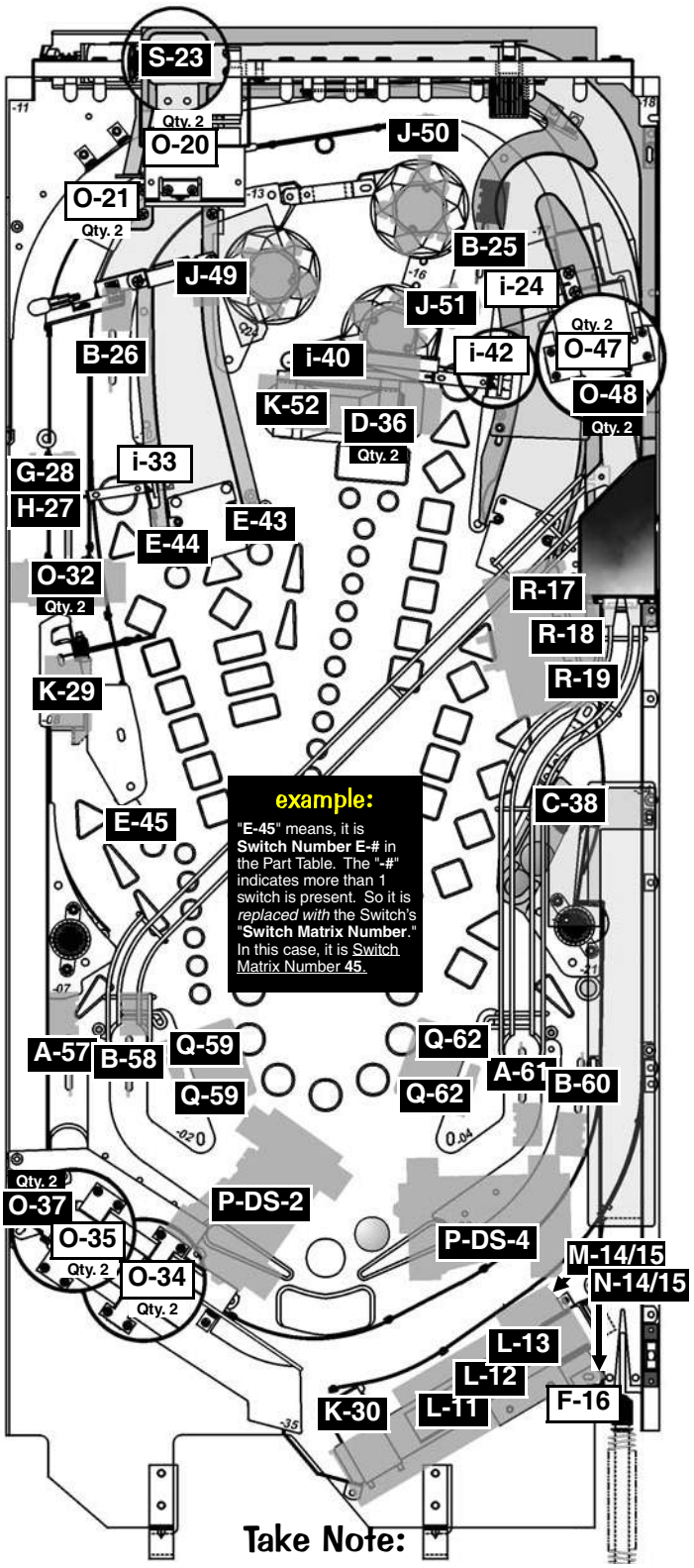

Take Note:

Legend Note:
Items noted with a white rectangle □ are Switches mounted above.
Items noted with a black rectangle ■ are Switches mounted below.
The **-#** in the Item Number (Nr.) is replaced with the Switch Matrix Number of that switch *(e.g. A-# is noted on the Playfield as A-57.*

Note Items F - S: *For better Switch view(s), see **Drawings for Major Assemblies ...** (**The Blue Pages**), Sec. **4**, Chapter **2**, (Page **81**), (view Table of Contents for exact page).*

Note Items C - E: *For better Target & Switch view(s) and breakdown of parts, see **Appendix I**, Pg. **I1** (the end of this Svc. Game Manual).*

Playfield Top - Roll-Under Gates ☐ & Spinners ■

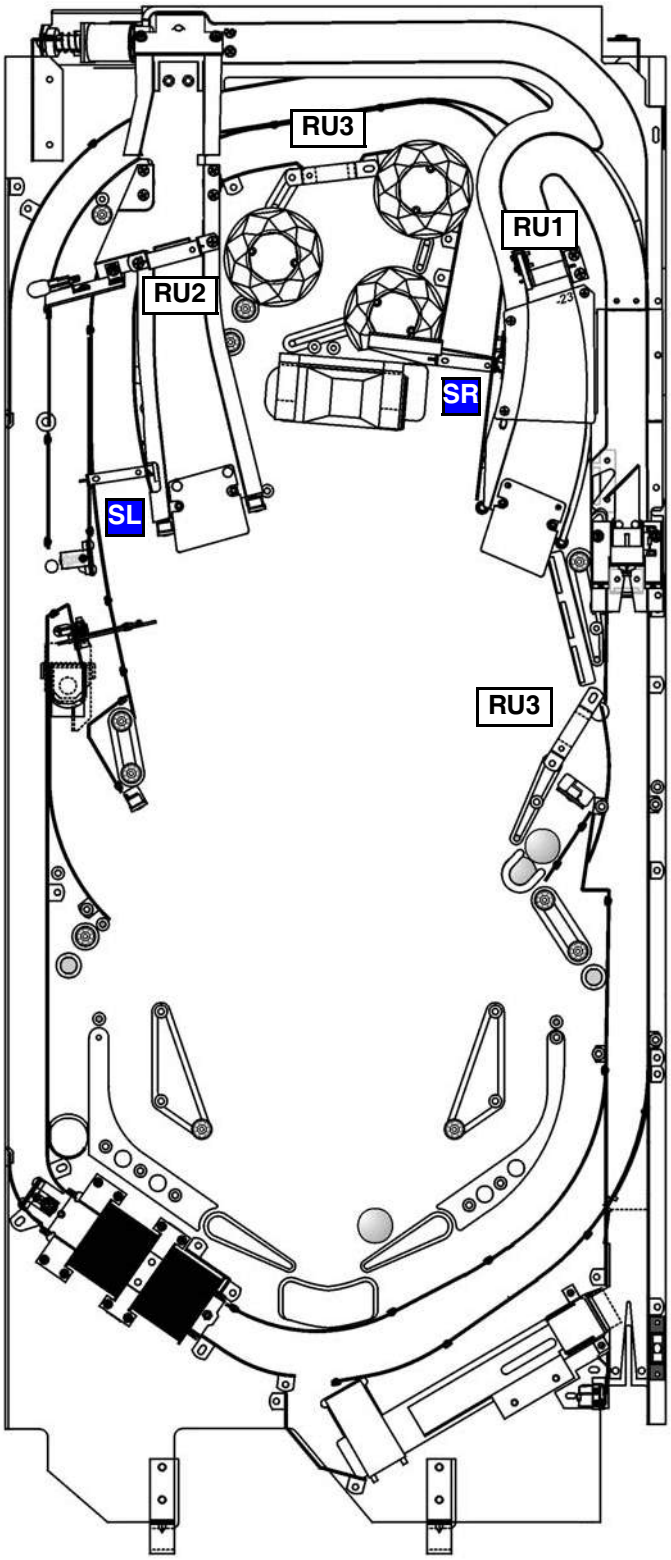

Nr.	ROLL-UNDER GATE PARTS	QTY.	SPI PART Nr.
RU1	Roll-Under Switch Gate	1	***Ind. Parts Only***
	Individual Parts Only : Switch (**180-5010-04**), Switch Gate Bracket (**535-9171-04**) **and** Wire Form on Bracket (**535-9172-01**) (ASM. REF. 500-6593-**01**)		
	Item RU1 is secured to Item 1 by: #8-32 X 5/8" SHWH Sw. Ser (Zc.) (Qty. 2) (237-5975-03), #8-32 Hex Nut (Qty. 2) (240-5103-00) **and** #8-32 Nylon Stop Nut (Qty. 2) (240-5102-00) *Switch Matrix Number **24***		
RU2	Ball Gate Bracket with Spring Flap	1	515-7436-00
	Wire Form (Gate) *(for above)*	1	535-9683-00
	Item RU2 is secured to Item 1® by: #8-32 X 3/8" PPH MS Ext. Sems (Zinc) (Qty. 1/per) (232-5301-00) **and** #8-32 Nylon Stop Nut (Qty. 2) (240-5102-00)		
RU3	Bracket, 1-Way Gate ***(by Plast. -21 & -24)***	2	535-9079-00
	Wire Gate *(for above)*	2	535-5307-07
	Item RU3 is secured by: #6-32 Nylon Stop Nut (Qty. 2/per) (240-5005-00)		

Note: *For views of Gates on Ramps, see **Drawings ... Assemblies & Ramps** (**The Blue Pages**), Section **4**, Chapter **2**, (Pages **100-102**).*

Nr.	SPINNER PARTS	QTY.	SPI PART Nr.
SL	Spinner & Switch ***(by Left Ramp)***	1	***Ind. Parts Only***
	Individual Parts Only : Switch (1-1/4" Actuator) (**180-5010-04**), Spinner Mounting Bracket (**535-8684-00**), Spinner Target Sub-Assembly (**515-7088-00**) **and** Decals *(reference only)* (**Kit: 802-5000-86**) ***Note:*** *Individual Decals (820-6371-37 & -38) are not available individually, ordering of kit is required. For all pieces, see **P/F - Plastics (Screened & Clear) Kit, Decals & Mylar Kits**, Page **69**.* (ASM. REF. 500-6421-00)		
	Item SL is sec. under the Lt Ramp by: #6 X 1/2" PFH AB (Zinc) (Qty. 2) (237-5880-00) *Switch Matrix Number **33***		
SR	Spinner & Switch ***(by Right Ramp)***	1	***Ind. Parts Only***
	Individual Parts Only : Switch (1-1/4" Actuator) (**180-5010-04**), Spinner Mounting Bracket (**535-8684-00**), Spinner Target Sub-Assembly (**515-7088-00**), Plastic Sign Mounting Bracket (535-9694-00), Plastic *(reference only)* (**Kit: 803-5000-86**) **and** Decals *(reference only)* (**Kit: 802-5000-86**) ***Note:*** *Individual Plastic (830-6035-14) and Decals (820-6371-39 & -40) are not available individually, ordering of kit is required. For all pieces, see **P/F - Plastics (Screened & Clear) Kit, Decals & Mylar Kits**, Page **69**.* (ASM. REF. 500-6421-00-86R)		

Take Note:

Legend Note:
Items noted with a white square ☐ are Roll-Under Gates (with switch) and Gravity 1-Way Gates. Items noted with a blue square ■ are Spinner Gate(s).

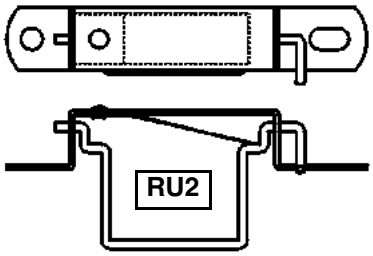

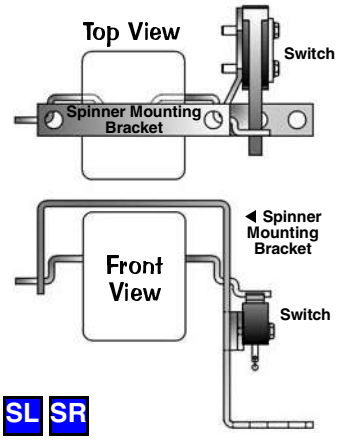

Playfield Top - Flat Rails □, Wood Rails ■, Ball Guides ■ & Wire Forms ■

Nr.	FLAT RAILS (ABOVE)	QTY.	SPI PART Nr.
F1	Flat Rail **(Entire Left Side Playfield Edge)**	1	535-9606-00
F2	Flat Rail **(Shooter Lane, Right Side Edge)**	1	535-9610-00
F3	Flat Rail **(Large Track, Right Outside)**	1	535-9611-00
F4	Flat Rail **(Large Track, Right Inside)**	1	535-9612-00
F5	Flat Rail **(Large Track, Top Outside Edge)**	1	535-9608-00
F6	Flat Rail **(Large Track, Right Middle Inside)**	1	535-9613-00
F7	Flat Rail **(Short Track, Outside Left to Right)**	1	535-9614-00
F8	Flat Rail **(Short Track, Inside Right)**	1	535-9615-00
F9	Flat Rail **(Large Track, Left Middle Inside)**	1	535-9616-00
F10	Flat Rail **(2-Post Diverter Track Exit Right)**	1	535-9617-00
F11	Flat Rail **(Large Track, Rt. of 2X Magnet Bottom)**	1	535-9618-00
F12	Flat Rail **(Short Track, Inside Left)**	1	535-9631-00
F13	Flat Rail **(Large Track, Left Inside)**	1	535-9632-00
F14	Flat Rail **(Below Large Track Exit Right)**	1	535-9635-00
F15	Flat Rail **(Bottom, to Ball Under-Trough)**	1	535-9636-00
F16	Flat Rail **(Large Track, Right of 2X Magnet Top)**	1	535-9688-00
F17	Flat Rail **(Large Track, Left of 2X Magnet Bottom)**	1	535-9607-00

Items F1-F17 are secured @ Tab or Hole by: #8 X 1/2" SHWH AB (Zinc) (Qty. 1/per) (234-5101-00) **and are secured @ Pem below by:** #8 Washer (Qty. 1/per) (242-5005-00) **and** #8-32 Nylon Stop Nut (Qty. 1/per) (240-5102-00)
Exception: Item F11 secured at bottom tab by: #8-32 T-Nut (Qty. 1) (240-5101-00) **and** #8-32 X 5/8" SHWH Ser. AB (Zinc) Wax (Qty. 1) (237-5975-03)

F18	Flat Rail **(Shooter Lane Ramp)**	1	535-9609-00

Item F18 is secured by: #4 X 5/8" PFH (Black) (Qty. 2) (535-9609-00)
Note: *Entrance from 4-Ball Trough is a* ***Bracket, Ball Trough Stop (535-9743-00) and is secured under the Flat Rail Shooter Lane Ramp above the Playfield by:*** *#6 X 1/2" HWH AB (Zinc) Red (Qty. 2) (234-5001-02)* ***(also Ref. Item 2, Page 83)***

Nr.	WOOD RAILS (ABOVE)	QTY.	SPI PART Nr.
W1	Wood Rail, 31.6" **(Right Side)**	1	525-5007-66
W2	Wood Rail, 6.75" **(Upper Right Side)**	1	525-5007-04

Items W1-W2 are secured by: #6 X 1-1/4" PFH A (Zinc) (Qty. 9) (237-5804-00)

Nr.	BALL GUIDES (ABOVE)	QTY.	SPI PART Nr.
BG1	Ball Return Lane Guide (Left)	1	535-9619-00
BG2	Ball Return Lane Guide (Right)	1	535-9620-00

Items BG1-BG2 are secured by: *See* ***P/F Top - Plastic Posts & Spacers ...,*** *Pages* ***74-75.***

Nr.	WIRE FORMS (ABOVE)	QTY.	SPI PART Nr.
WF1	Wire Form (Neuton Ball)	1	535-9522-00

For Wire Forms on Roll-Under and 1-Way Gates, see ***Playfield Top - Roll-Under Gates & Spinner*** *(previous Page), Page* ***67.***

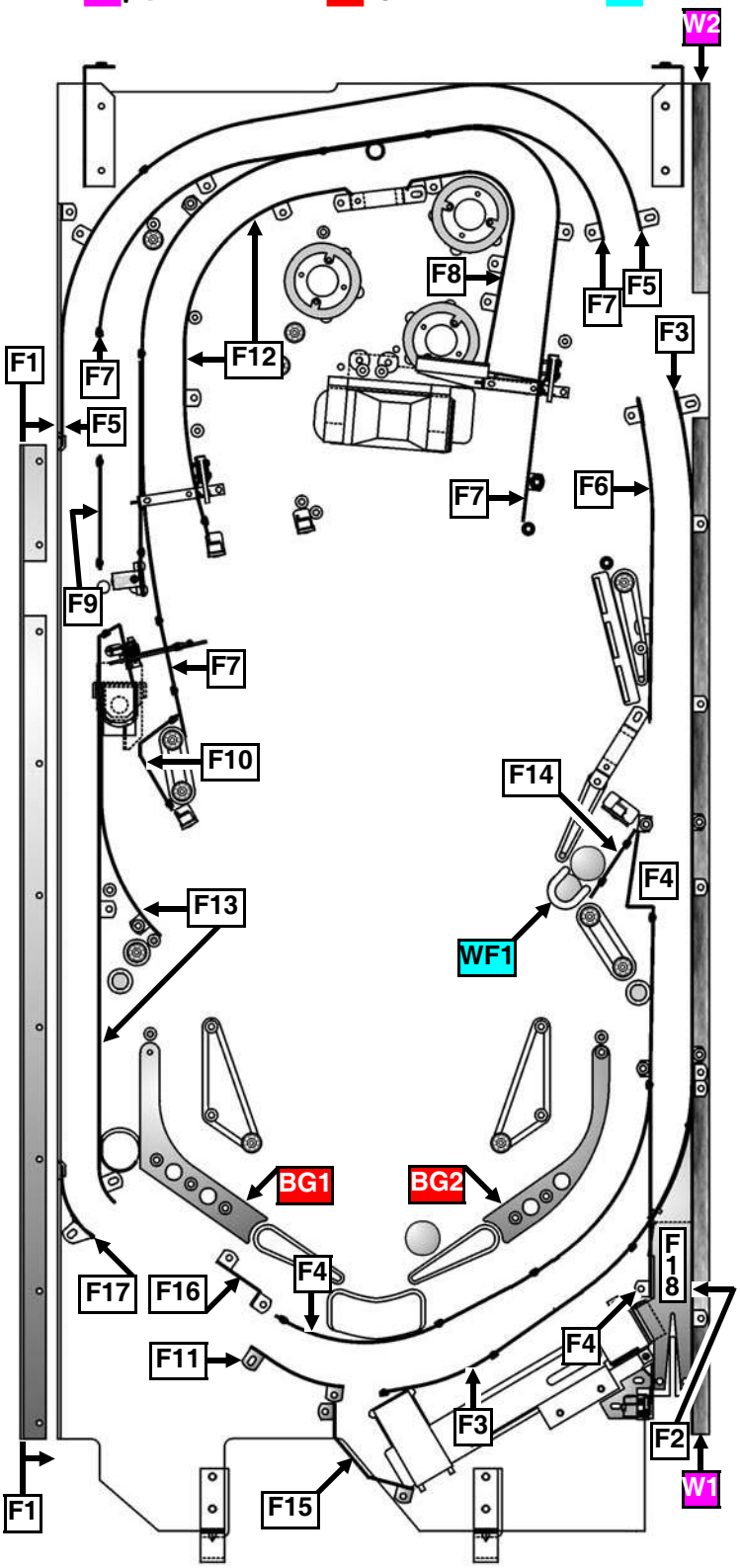

Take Note:

Legend Note:
Items noted with a white square □ are Flat Rails.
Items noted with a magenta square ■ are Wood Rails.
Items noted with a red square ■ are Ball Guides *(Snubber Wires)*
Items noted with a cyan square ■ are Wire Forms.

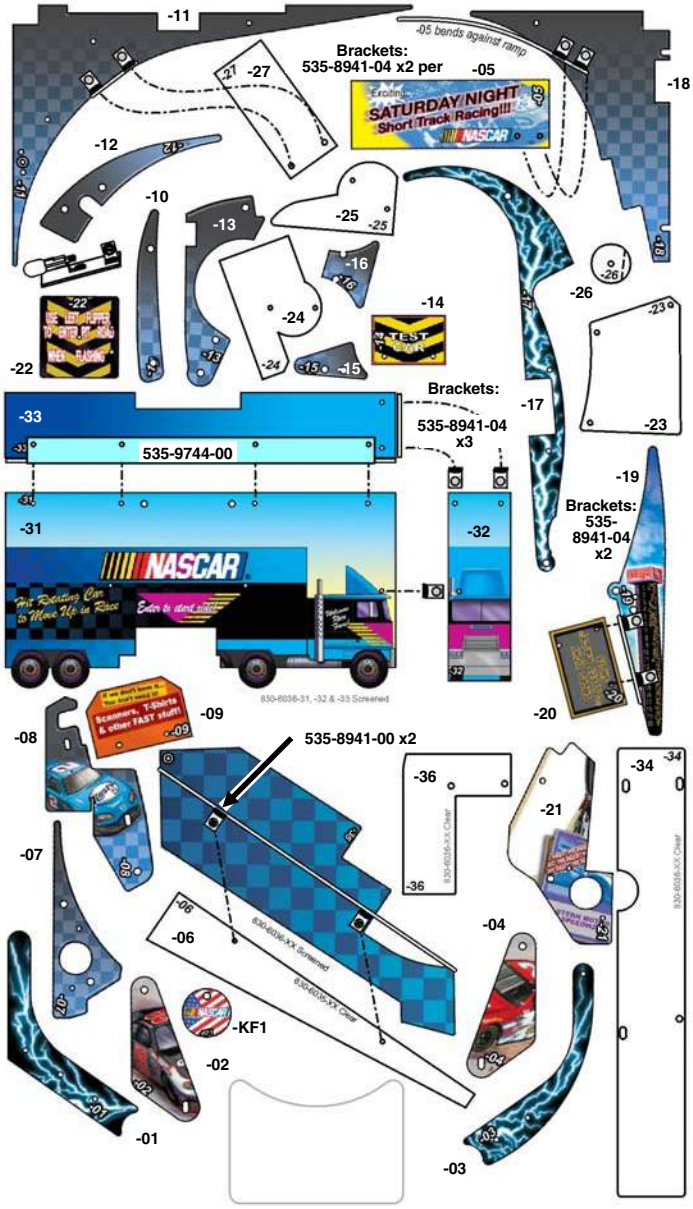

Playfield Top - Plastics (Screened & Clear) Kit, Decals & Mylar Kits ‡

PLASTICS (BUTYRATE) KIT	SPI PART Nr.

Kit: **Playfield Plastics (Screened & Clear)**

803-5000-**86** ***Kit includes:***

Screened & Clear Set (830-6035-XX & 830-6036-XX)

DECAL & MYLAR KITS	SPI PART Nr.

Kits: **Playfield & Assembly Decals, Lexan & Mylar**

802-5000-**86** ***Kit (Decals) includes:***

Playfield Decal Set (820-6371-XX) and

Left Ramp (820-6366-00) & Right Ramp (820-6366-01) Decals

Most last 2-digits are sequential. *The following numbers were not used: -07, -13 thru -23, -26 thru -29, -45 thru -49 and -71+*

802-5001-**86** ***Kit (Mylar) includes:***

Full Playfield Mylar (820-5999-86)

‡ Attention: No individual Plastic or Decal can be ordered separately, unless noted otherwise.

Other miscellaneous plastics and/or decals can be found on the ***Backbox & Speaker Panel Assemblies*** *(Pages* ***60-61****),* ***Cabinet - Parts & Switches*** *(Pages* ***62-63****) and* ***Playfield Bottom - Miscellaneous Parts & Brackets*** *(Page* ***65****).*

Plastic Pieces are shown in the general area of where they are located (see game photo on Page 136 or any playfield drawing where the plastics pieces are in place).

** **Note:** The following pieces are positioned perpendicular on it's mate. They are riveted using brackets (see* ***Playfield Top - Misc. Parts & Brackets****, Page* ***64****):*
-27 onto -11 (Upper Left), -05 onto -18 (Upper RIght), -22 onto Left Ramp, -26 onto -19 (Middle Right), -06 onto -35 (Bottom Left), -31 & -32 (Semi-Truck) onto -33 (covers Motor & Rotating Plate on the Back Panel)

Note: *For views & usage of plastics on Assemblies see* ***Drawings for Major Assemblies and Ramps*** *(**The Blue Pages**), Section* ***4****, Chapter* ***2*** *:* ***-09*** *on Hot Dog Sign (Page* ***90****);* ***-23*** *over Right Ramp (Pages* ***100-101****);* ***-22*** *on Left Ramp (Page* ***102****);*

Plastics & Decals are subject to change without notice during and after production. Shapes and/or Screening may change. Pieces can be added or subtracted. Service Bulletin(s) will announce any critical changes, if warranted.

Decals are shown larger in comparison to the Plastic Set for clarity.
Center Arch Decal (-10) Outline with plastics shows size in comparison.

Above : *Plastic Kit 803-5000-86.* ***Below :*** *Decal Kit (802-5000-86, includes 820-6371-XX Playfield and 820-6366-XX Ramp Decals.*

Playfield Top & Bottom - Metal Posts □ & Fin Shank Screws ■ (Actual Size) †

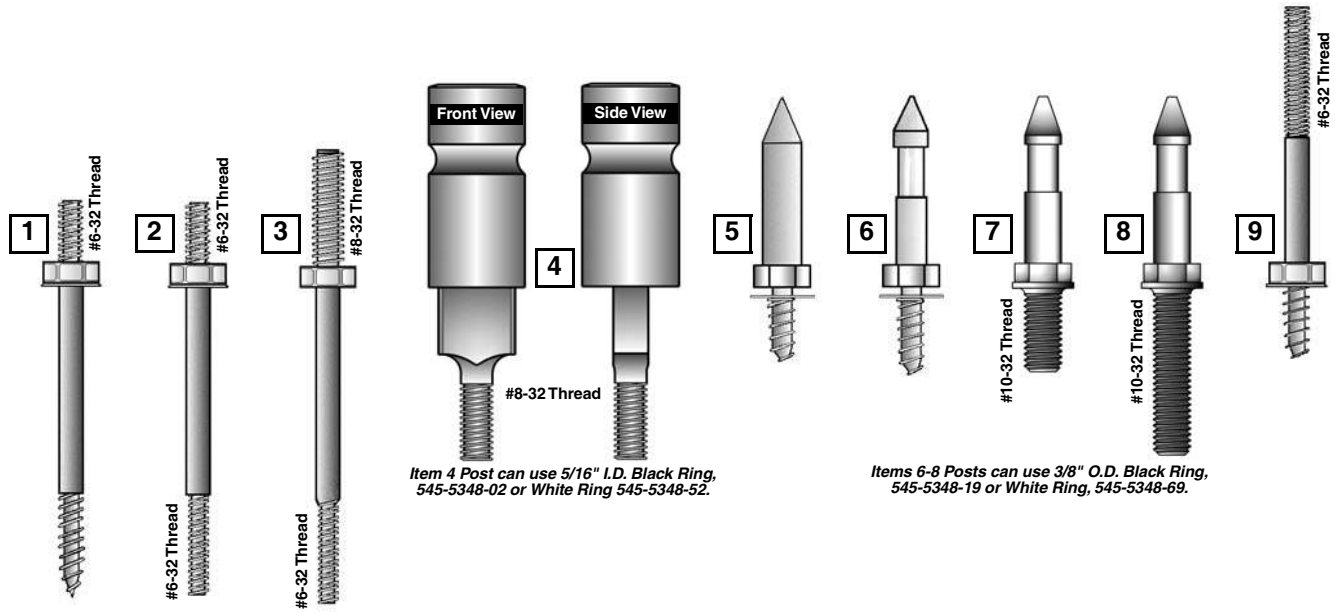

Item 4 Post can use 5/16" I.D. Black Ring, 545-5348-02 or White Ring 545-5348-52.

Items 6-8 Posts can use 3/8" O.D. Black Ring, 545-5348-19 or White Ring, 545-5348-69.

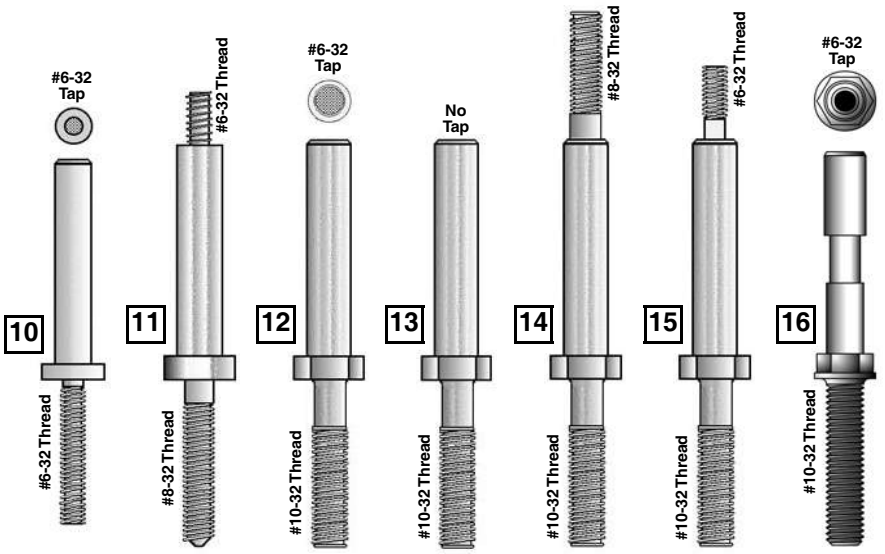

Items 11-15 Posts can use a Black Post Rubber Sleeve (Tall), 545-5308-00 or White Post Rubber Sleeve (Tall), 545-5308-08.

Take Note:

Legend Note:
Items noted with a white square □ are Metal Posts.
Items noted with a black square ■ are Fin Shank Screws.

A & B ***Items A & B Note:*** *Used to secure Hex Spacers onto the Playfield Wood.*

C ***Item C Note:*** *Quantity 4 on bottom Cabinet Speaker Grill (Qty. 4) (also requires #6-32 Nylon Stop Nut, 240-5005-00).*

D ***Item D Note:*** *Quantity 3/per on the Coil Bracket Welded Assembly (515-5939-00) in the Bumper Bottom Assembly (515-6459-04).*

A - D ***Items A-D Note:*** *The "Fins" keep the screw from turning inside the wood hole.*

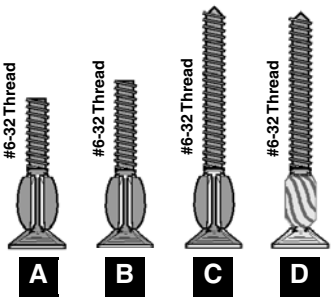

Nr.	METAL POSTS	QTY.	SPI PART Nr.
1	Post Fstn. #6-32 Top / Wood Scr. Bot.	15	530-5010-02
2	Post Fasten #6-32 Top / #6-32 Bot.	14	530-5012-02
3	Post Fasten #8-32 Top / #6-32 Bot.	2	530-5008-00
4	*Adjustable* Sliding Post **(Brass)** #8-32 Bot.	2	530-5621-00
5	Mini-Post Wood Screw **(no cut-away)**		530-5004-01
6	Mini-Post Wood Screw	1	530-5004-00
7	Mini-Post MS / #10-32 Bot. **.4" Thread**		530-5005-01
8	Mini-Post MS / #10-32 Bot. **.875" Thread**	8	530-5005-00
9	Post #6-32 Top / Wood Screw Bottom		530-5263-01
10	Post #6-32 Tap / #6-32 Bottom		530-5127-00
11	Post Fasten #6-32 Top / #8-32 Bot.		530-5007-00

Nr.	METAL POSTS	QTY.	SPI PART Nr.
12	Post Hex Base #6-32 Tap/#10-32 Bot.	1	530-5332-01
13	Post Hex Base (No Tap)/#10-32 Bot.		530-5332-00
14	Post Hex Base #8-32 Top/#10-32 Bot.		530-5332-02
15	Post Hex Base #6-32 Top/#10-32 Bot.	1	530-5332-03
16	Post Hex Base #6-32 Tap/#10-32 Bot.	2	530-5679-00

Nr.	FIN SHANK SCREWS	QTY.	SPI PART Nr.
A	#6-32 X 3/4" Fin Shank Screw		237-5921-02
B	#6-32 X 7/8" Fin Shank Screw		237-5921-04
C	#6-32 X 1¼" Fin Shank Screw	4	237-5883-00
D	#6-32 X 1 3/16" Spiral Fin Shank Screw	9	237-5957-00

† The item type (size / description), the quantity and/or location used, are subject to change without notice. Service Bulletins will anounce any changes, if warranted.

Playfield Top & Bottom - Metal Posts ☐ & Fin Shank Screws ■ Continued

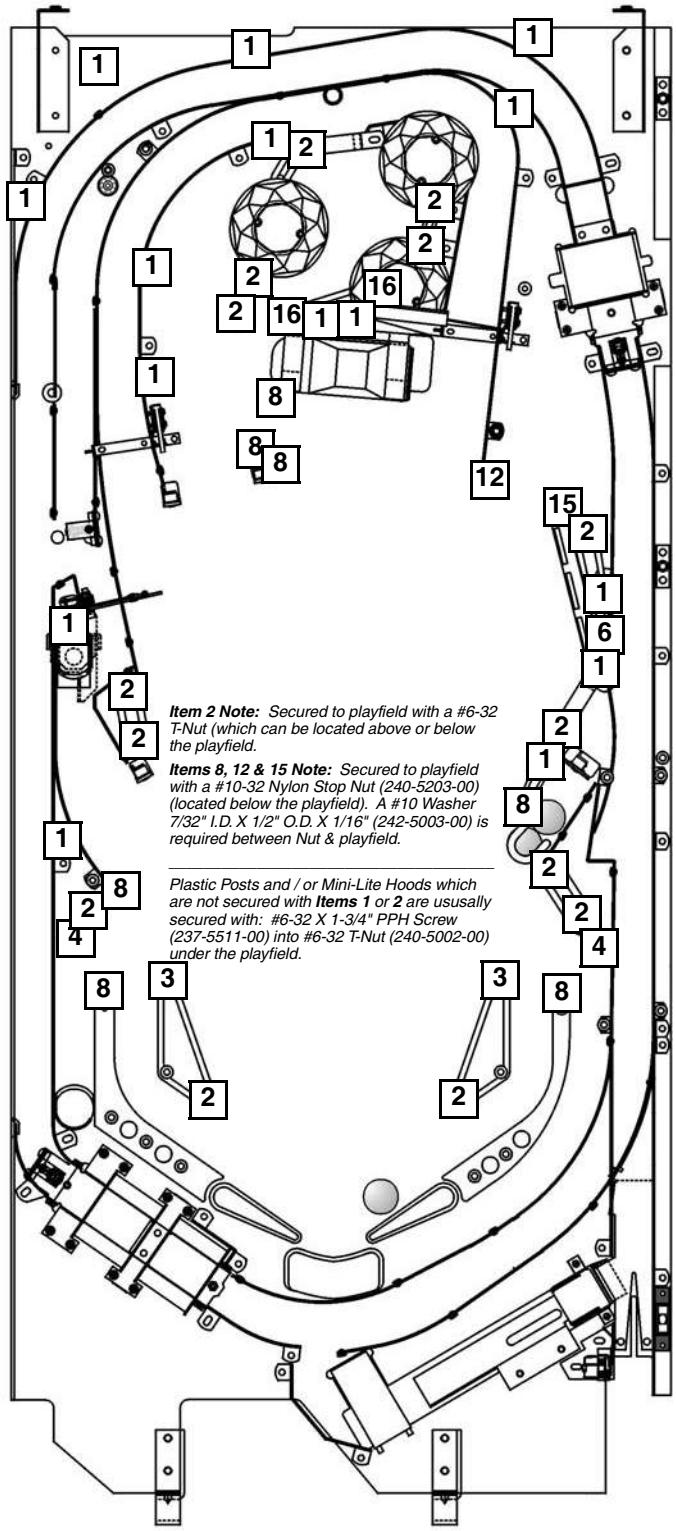

Take Note:

Legend Note:
Items noted with a white square ☐ are Metal Posts.
Items noted with a black square ■ are Fin Shank Screws.

Playfield Top & Bottom - Nylon Stop, KEPS, Hex, T-, Flange, Pal & Wing Nuts* (Actual Size) †

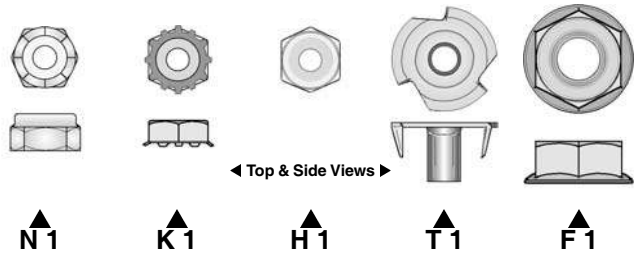

Nr.	NYLON STOP NUTS*	QTY.	SPI PART Nr.
N1	#6-32 Nylon Stop Nut	49	240-5005-00
N2	#6-32 N.S. Nut *(with ¼" Hex Body)*	3	240-5010-00
N3	#8-32 Nylon Stop Nut	51	240-5102-00
N4	#10-32 Nylon Stop Nut	14	240-5203-00
N5	#10-24 Nylon Stop Nut	2	240-5206-00
	*Item **N5** used with #10-24 X 1-3/4" Carriage Bolt Square Neck Black (231-5022-00) located in the Cabinet for the Roto Lock (Male) (355-5006-01).*		
N6	#4-40 Nylon Stop Nut		240-5303-00
N7	#4-40 *(18/8 Stainless)* Nylon Stop Nut		240-5303-01
N8	5/16"-18 Nylon Stop Nut		240-5316-00

Nr.	KEPS NUTS*	QTY.	SPI PART Nr.
K1	#6-32 Keps Nut *(with Star Washer)*	4	240-5008-00
K2	#6-32 Keps Nut *(with ¼" Hex Body)*		240-5011-00
K3	#8-32 Keps Nut		240-5104-00
K4	#10-32 Keps Nut		240-5208-00
K5	#10-24 Keps Nut	14	240-5207-00
K6	#4-40 Keps Nut		240-5318-00

Nr.	HEX NUTS*	QTY.	SPI PART Nr.
H1	#6-32 Hex Nut *(No Star Washer)*	4	240-5004-00
H2	#8-32 Hex Nut	2	240-5103-00
H3	#10-32 Hex Nut		240-5201-00
H4	#10-24 Hex Nut	2	240-5202-00
	*Item **H4** used with #10-24 X 1" Carriage Bolt Square Neck Black (231-5021-00) located in the Cabinet for the Side Armor Rear (towards Backbox).*		
H5	#10-32 X ⅜" Hex Nut		240-5209-00
H6	¾-16 Hex Nut		240-5315-00
H7	#2-56 Hex Nut		240-5301-00
H8	⅞"-14 Hex Nut		240-5317-00

Nr.	T-NUTS*	QTY.	SPI PART Nr.
T1	#6-32 T-Nut	22	240-5002-00
T2	#6-32 T-Nut *(with Side Cut Off)*		240-5002-01
T3	#8-32 T-Nut	19	240-5101-00
T4	#10-32 *(Black Oxide)* T-Nut		240-5007-00
T5	#10-32 T-Nut *(with Side Cut Off)*		240-5205-00
T6	#10-32 X 5/16" T-Nut		240-5204-00
T7	#10-24 T-Nut		240-5200-00

Nr.	FLANGE NUT*	QTY.	SPI PART Nr.
F1	¼" X 20 Flange Nut	12	240-5300-00
	*Item **F1** used with 1/4-20 X 1-1/4 Sq. Neck Carriage Bolt Black (231-5003-00) located in the Cabinet for the SIde Armor (Front) and Pivot Hinges.*		

Nr.	PAL NUTS*	QTY.	SPI PART Nr.
P1	Plastic Pal Nut *(on Flipper Buttons)*		240-5003-00
P2	Metal Pal Nut *(on Flipper Buttons)*	2	240-5003-01

Nr.	WING NUTS*	QTY.	SPI PART Nr.
W1	#6-32 Wing Nut		240-5001-00
W2	#8-32 Wing Nut		240-5100-00
W3	#10-24 Wing Nut		240-5211-00
W4	¼"-20 Wing Nut	2	240-5302-00
W5	¼"-20 Toggle Wing		240-5324-00

* ***Not Shown:*** *Items N2-N8, K2-K6, H2-H8, T2-T7, P1-P2 & W1-W5*

† The item type (size / description), the quantity and/or location used, are subject to change without notice. Service Bulletins will anounce any changes, if warranted.

Playfield Top - Hex Spacers ☐ (Actual Size) †

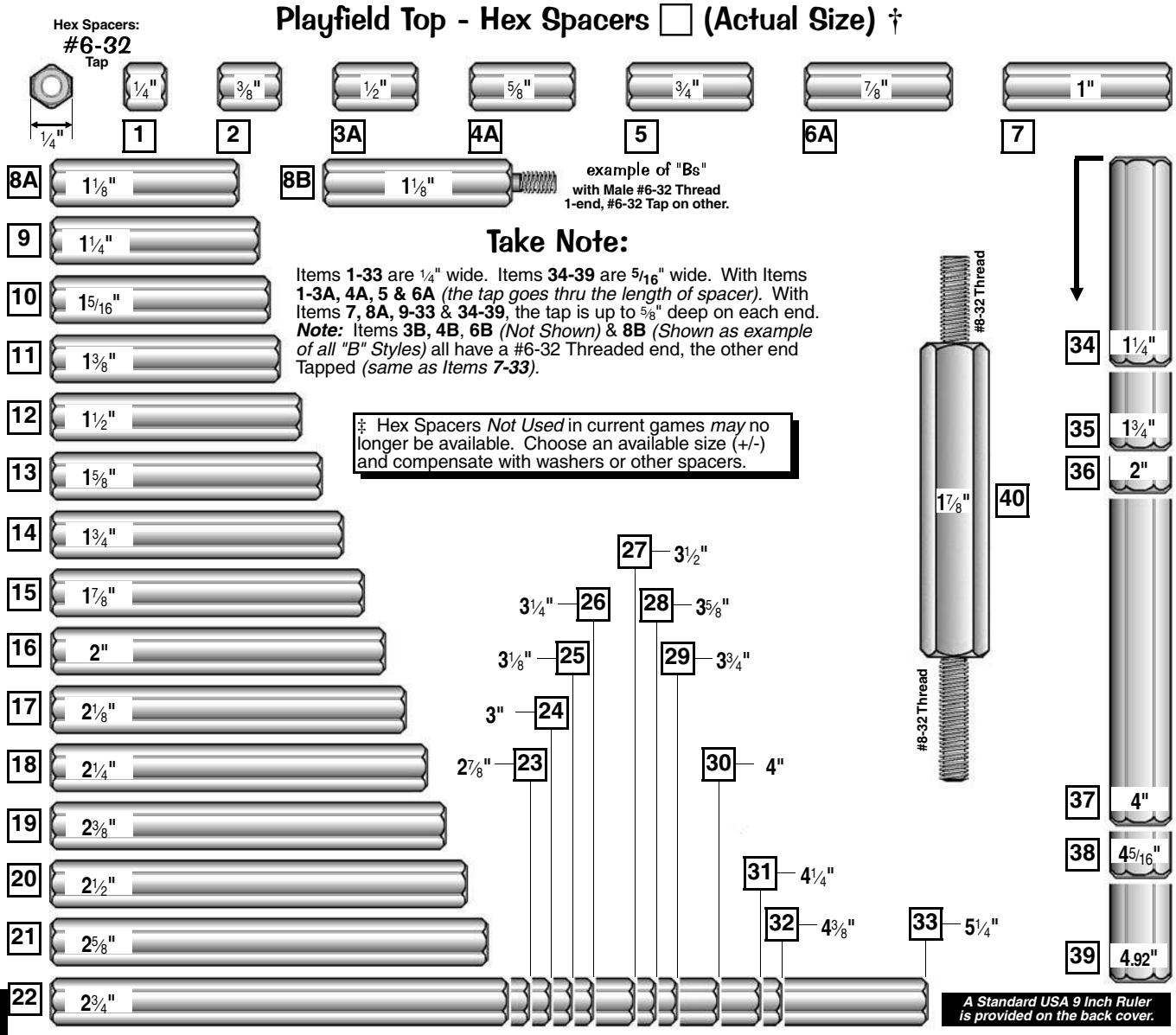

Take Note:

Items **1-33** are 1/4" wide. Items **34-39** are 5/16" wide. With Items **1-3A, 4A, 5 & 6A** *(the tap goes thru the length of spacer).* With Items **7, 8A, 9-33** & **34-39**, the tap is up to 5/8" deep on each end. ***Note:*** Items **3B, 4B, 6B** *(Not Shown)* & **8B** *(Shown as example of all "B" Styles)* all have a #6-32 Threaded end, the other end Tapped *(same as Items **7-33**).*

‡ Hex Spacers *Not Used* in current games *may* no longer be available. Choose an available size (+/-) and compensate with washers or other spacers.

A Standard USA 9 Inch Ruler is provided on the back cover.

Nr.	HEX SPACERS	QTY.	SPI PART Nr.
1	1/4" X 1/4" : #6-32 Tap *(both ends)*		254-5008-00
2	3/8" X 1/4" : #6-32 Tap *(both ends)*		254-5008-12
3A	1/2" X 1/4" : #6-32 Tap *(both ends)*	6	254-5008-03
3B*	Identical to **3A** *with #6-32 Thread end*		254-5024-03
4A	5/8" X 1/4" : #6-32 Tap *(both ends)*		254-5008-02
4B*	Identical to **4A** *with #6-32 Thread end*		254-5024-02
5	3/4" X 1/4" : #6-32 Tap *(both ends)*	1	254-5008-04
6A	7/8" X 1/4" : #6-32 Tap *(both ends)*	1	254-5008-05
6B*	Identical to **6A** *with #6-32 Thread end*		254-5024-05
7	1" X 1/4" : #6-32 Tap *(both ends)*		254-5008-06
8A	1 1/8" X 1/4" : #6-32 Tap *(both ends)*		254-5008-17
8B	Identical to **8A** *with #6-32 Thread end*		254-5024-17
9	1 1/4" X 1/4" : #6-32 Tap *(both ends)*		254-5008-11
10	1 5/16" X 1/4" : #6-32 Tap *(both ends)*		254-5008-34
11 ‡	1 3/8" X 1/4" : #6-32 Tap *(both ends)*		254-5008-33
12	1 1/2" X 1/4" : #6-32 Tap *(both ends)*		254-5008-09
13 ‡	1 5/8" X 1/4" : #6-32 Tap *(both ends)*		254-5008-13
14	1 3/4" X 1/4" : #6-32 Tap *(both ends)*		254-5008-10
15 ‡	1 7/8" X 1/4" : #6-32 Tap *(both ends)*		254-5008-20
16	2" X 1/4" : #6-32 Tap *(both ends)*	4	254-5008-07
17	2 1/8" X 1/4" : #6-32 Tap *(both ends)*	1	254-5008-32
18	2 1/4" X 1/4" : #6-32 Tap *(both ends)*		254-5008-18

Nr.	HEX SPACERS	QTY.	SPI PART Nr.
19	2 3/8" X 1/4" : #6-32 Tap *(both ends)*	1	254-5008-28
20	2 1/2" X 1/4" : #6-32 Tap *(both ends)*		254-5008-16
21	2 5/8" X 1/4" : #6-32 Tap *(both ends)*	1	254-5008-08
22	2 3/4" X 1/4" : #6-32 Tap *(both ends)*		254-5008-15
23	2 7/8" X 1/4" : #6-32 Tap *(both ends)*		254-5008-31
24	3" X 1/4" : #6-32 Tap *(both ends)*		254-5008-14
25	3 1/8" X 1/4" : #6-32 Tap *(both ends)*		254-5008-19
26	3 1/4" X 1/4" : #6-32 Tap *(both ends)*		254-5008-26
27	3 1/2" X 1/4" : #6-32 Tap *(both ends)*		254-5008-27
28	3 5/8" X 1/4" : #6-32 Tap *(both ends)*		254-5008-25
29	3 3/4" X 1/4" : #6-32 Tap *(both ends)*		254-5008-36
30	4" X 1/4" : #6-32 Tap *(both ends)*		254-5008-21
31	4 1/4" X 1/4" : #6-32 Tap *(both ends)*		254-5008-30
32	4 3/8" X 1/4" : #6-32 Tap *(both ends)*		254-5008-29
33	5 1/4" X 1/4" : #6-32 Tap *(both ends)*		254-5008-35
34	1 1/4" X 5/16" : #6-32 Tap *(both ends)*		254-5018-09
35	1 3/4" X 5/16" : #6-32 Tap *(both ends)*		254-5018-06
36	2" X 5/16" : #6-32 Tap *(both ends)*		254-5018-07
37	4" X 5/16" : #6-32 Tap *(both ends)*		254-5018-03
38	4 5/16" X 5/16" : #6-32 Tap *(both ends)*		254-5018-00
39	4.92" X 5/16" : #6-32 Tap *(both ends)*		254-5018-04
40	1 7/8" X 3/8" : #8-32 *Thread (both ends)*		***530***-5285-00

† The item type (size / description), the quantity and/or location used, are subject to change without notice. Service Bulletins will anounce any changes, if warranted.

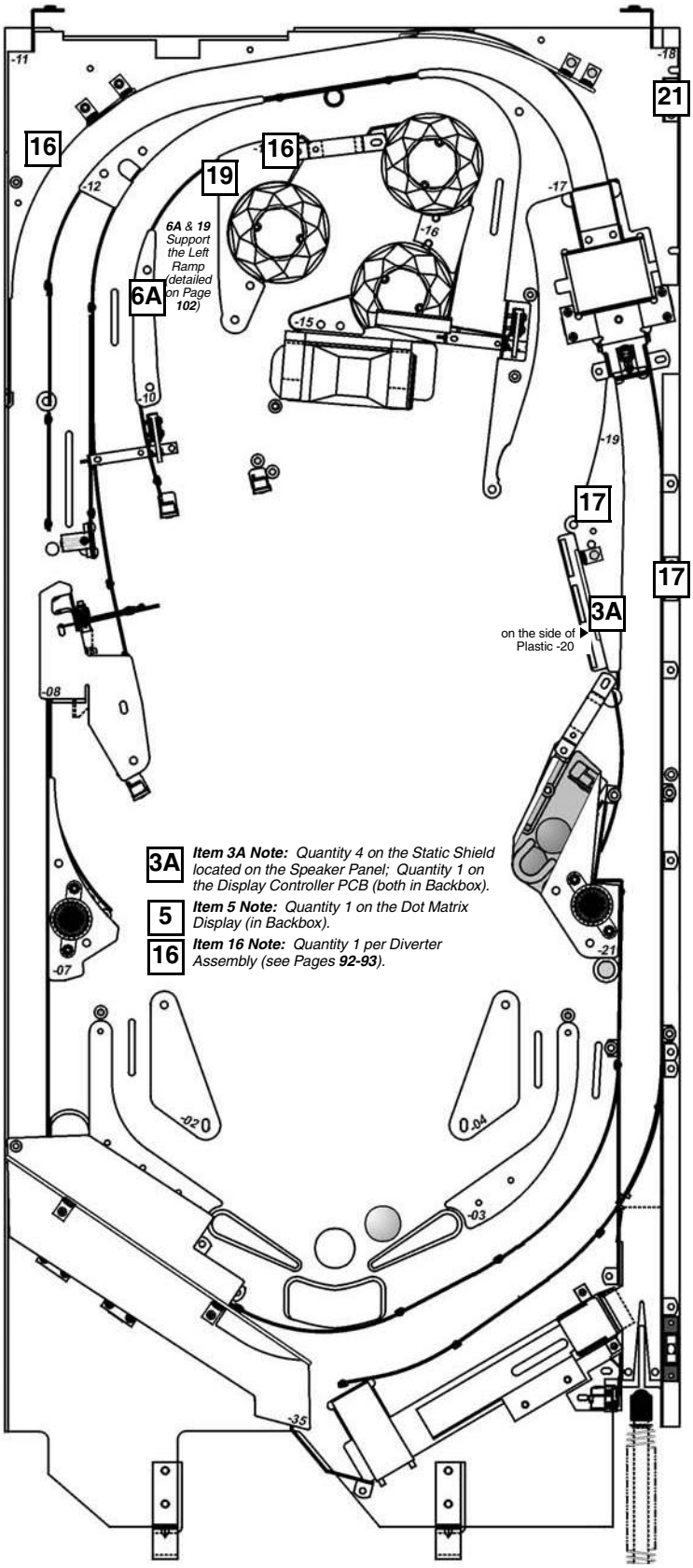

Take Note:

Legend Note:
Items noted with a white square ☐ are Hex Spacers.

† *The item type (size / description), the quantity and/or location used, are subject to change without notice. Service Bulletins will anounce any changes, if warranted.*

Playfield Top - Plastic Posts & Spacers ☐ & Metal Spacers ■ (Actual Size) †

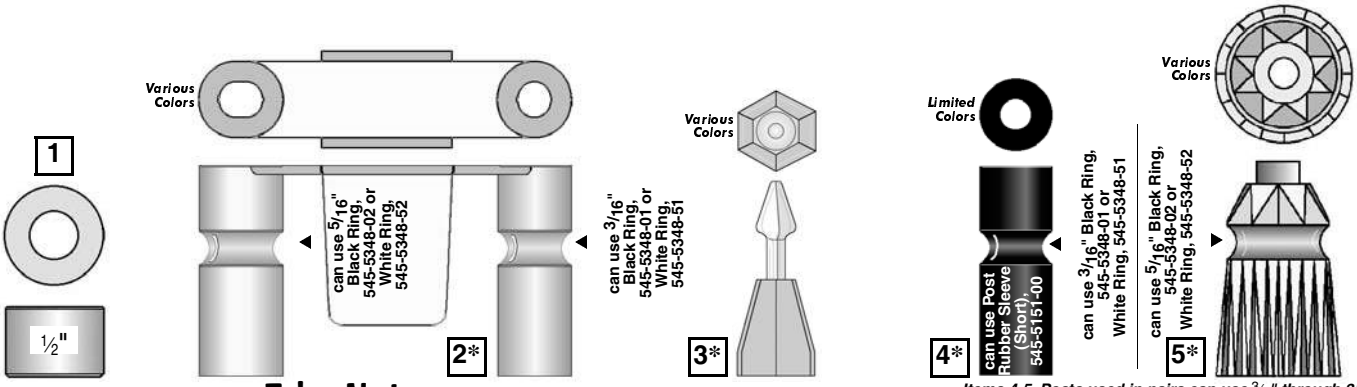

Items 4-5 Posts used in pairs can use ¾" through 3" Rubber Rings, see Rubber Parts for Part Numbers.

Take Note:

PLASTIC PART COLOR CHART

Nr.	Color	Nr.	Color	Nr.	Color
-00	Black	-06	Yellow	-12	Fluor. Blue
-01	Clear	-07	Orange	-13	Teal Green
-02	Red	-08	White	-14	Gray
-03	Amber	-09	Purple	-15	Luminescent
-04	Green	-10	Fluor. Orange	-16	Gold
-05	Blue	-11	Fluor. Green		

* Items **2 - 5** come in various colors *(may not be available in every color)*. Item **4** is currently only available in the color(s) stated in this game manual *(other colors used in prior games may no longer be available)*. The "**-XX**" or last 2-Digits in Part Nºs which come in various colors, should be replaced with the desired 2-Digit Nº from the above Color Chart. Some colors may no longer be available for desired item.

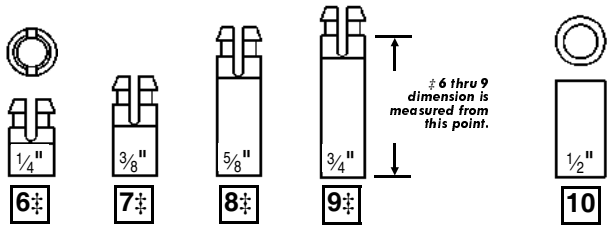

‡ Items **6** through **9** *dimensions are measured from bottom to just under the cut-away.* Item **30** *dimension* is measured from *top-to-top* of curve. *See pictorials with Items **9** & **30**.*

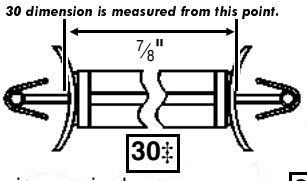

Take Note:

If any one of Items **11-23** Plastic Spacers is not available in the size required, order the smaller sized spacers required to stack sizes together until appropriate size is achieved *(e.g. If 1⅛" is needed but unavailable, order a ½" + ⅝" & stack to = 1⅛").*

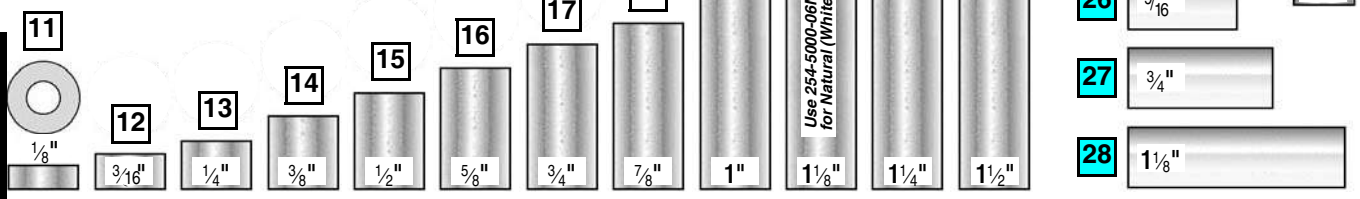

Nr.	PLASTIC POSTS & SPACERS	QTY.	SPI PART Nr.
1	⅜" X ½" Metal Spacer		530-5099-00
2**	Top Lane Plastic Mini-Lite Hood (Clr)		550-5061-XX
	Item 2 typically secured by: #6-32 X 1-3/4" PPH MS (Zinc) (Qty. 2/per) (237-5511-00) **and** Washer 9/64" X 5/16" OD X 1/32" (Qty. 2/per) (242-5017-00), if used.		
3**	Mini-Jewel Plastic Post (Clear)	4	550-5052-01
	Item 3 typically secured by: #6 X 3/8" HWH AB (Zinc) (Qty. 1/per) (234-5000-00)		
4**	1 1/16" 1-Groove Plastic Post (Black)		550-5059-00
	1 1/16" 1-Groove Plastic Post (Clear)	26	550-5059-01
5**	1-Groove Jewel Plastic Post (Clear)	13	550-5034-01
	Items 4 & 5 typically secured by: Post Fastening Screw #6-32 Top / #6-32 Bottom (Qty. 1/per) (530-5012-02, Item 6 Page 69).		
6 ‡	¼" Slf. Rtn. Plastic Spacer White	4	254-5007-02
7 ‡	⅜" Slf. Rtn. Plastic Spacer White		254-5007-01
8 ‡	⅝" Slf. Rtn. Plastic Spacer White		254-5007-00
9 ‡	¾" Slf. Rtn. Plastic Spacer White		254-5007-03
10	½" X ¼" Plastic Spacer White **(Narrow)**		254-5000-03
11	⅛" X ⅜" Plastic Spacer Gray		254-5000-19
12	3/16" X ⅜" Plastic Spacer Gray	6	254-5000-18
13	¼" X ⅜" Plastic Spacer Gray	4	254-5000-02

Nr.	PLASTIC POSTS & SPACERS	QTY.	SPI PART Nr.
14	⅜" X ⅜" Plastic Spacer Gray		254-5000-12
15	½" X ⅜" Plastic Spacer Gray	10	254-5000-01
16	⅝" X ⅜" Plastic Spacer Gray	7	254-5000-14
17	¾" X ⅜" Plastic Spacer Gray	3	254-5000-07
18	⅞" X ⅜" Plastic Spacer Gray		254-5000-11
19	1" X ⅜" Plastic Spacer Gray	1	254-5000-04
20	1⅛" X ⅜" Plastic Spacer Black	1	254-5000-06B
	1⅛" X ⅜" Plastic Spacer Natural		254-5000-06N
21	1¼" X ⅜" Plastic Spacer Gray	1	254-5000-05
22	1½" X ⅜" Plastic Spacer Gray		254-5000-08
23	1 15/16" X ⅜" Plastic Spacer Gray		254-5000-15
24	¼" X 5/16" X .144" I.D. Metal Spacer	1	254-5014-03
25	½" X 5/16" X .144" I.D. Metal Spacer	3	254-5014-00
26	9/16" X 5/16" X .144" I.D. Metal Spacer		254-5014-04
27	¾" X 5/16" X .144" I.D. Metal Spacer		254-5014-01
28	1⅛" X 5/16" X .144" I.D. Metal Spacer		254-5014-02
29	1" X 5/16" X .144" I.D. Metal Spacer		254-5001-00
30‡	⅞" Plastic Spacer Support **(Dual-Locking)**		254-5039-14

† The item type (size / description), the quantity and/or location used, are subject to change without notice. Service Bulletins will anounce any changes, if warranted.

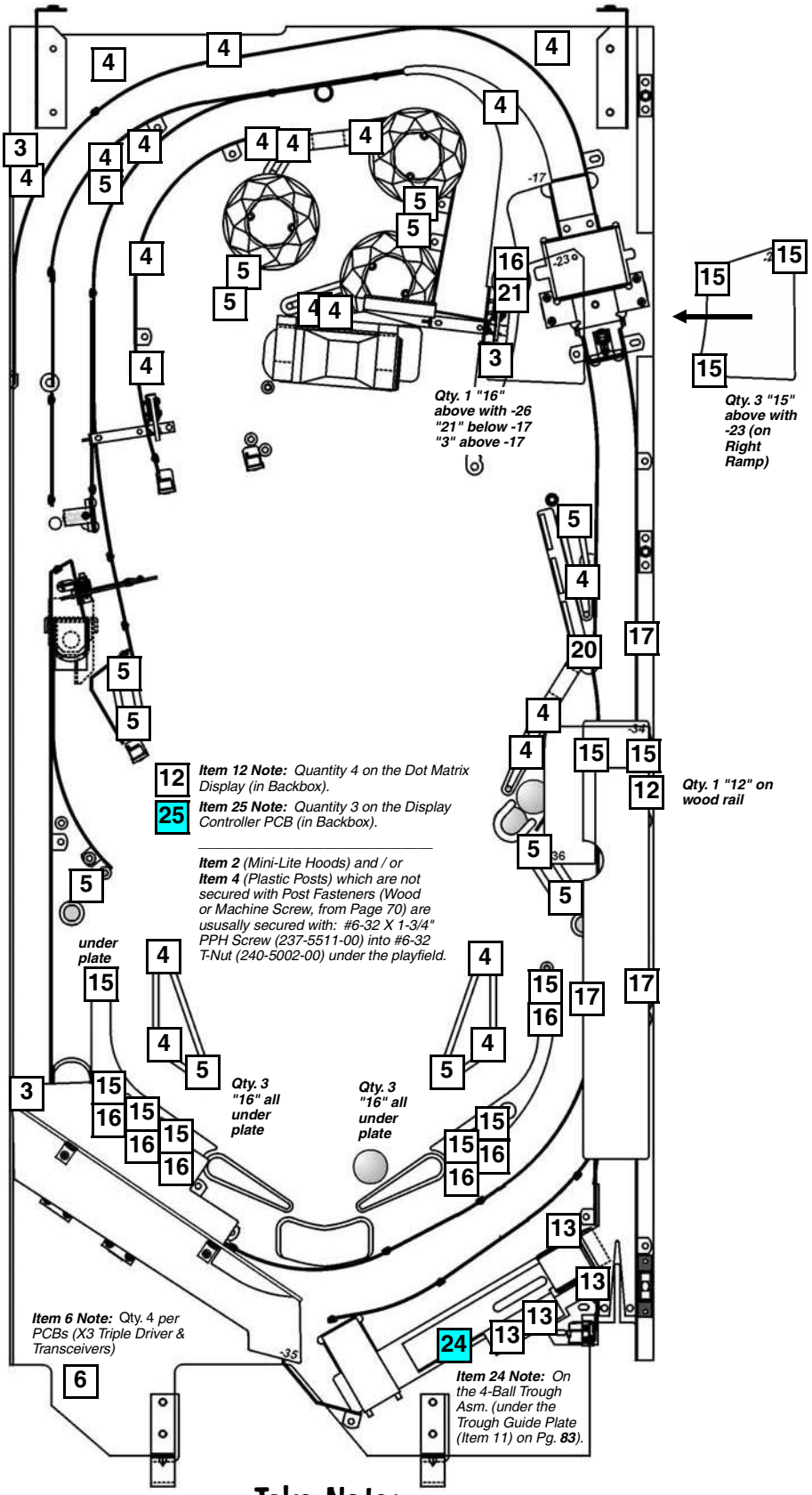

Take Note:

Legend Note:
Items noted with a white square ☐ are Plastic Posts & Spacers.
Items noted with a cyan square ■ are Metal Spacers.

† *The item type (size / description), the quantity and/or location used, are subject to change without notice. Service Bulletins will anounce any changes, if warranted.*

P/F Top & Bot. - Rubber Parts Red ■, Black ■ & White □ (Rings Actual Size) †

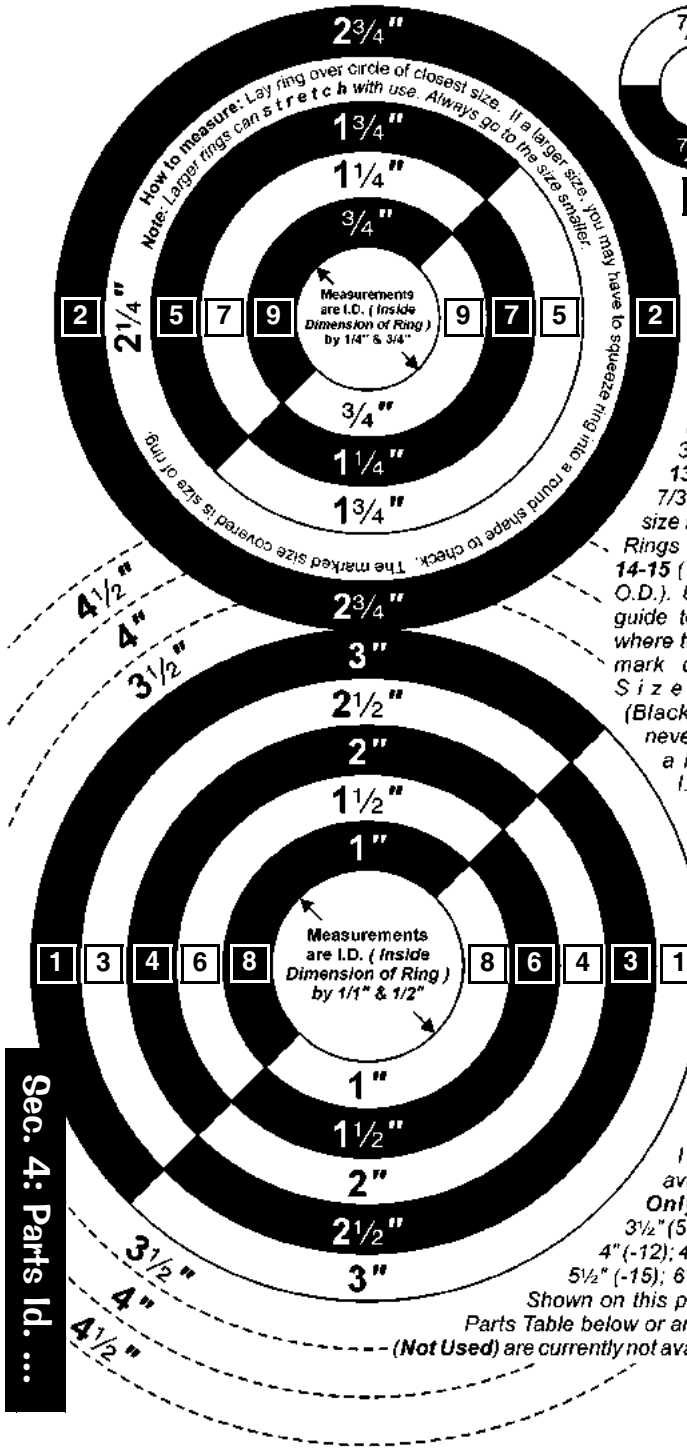

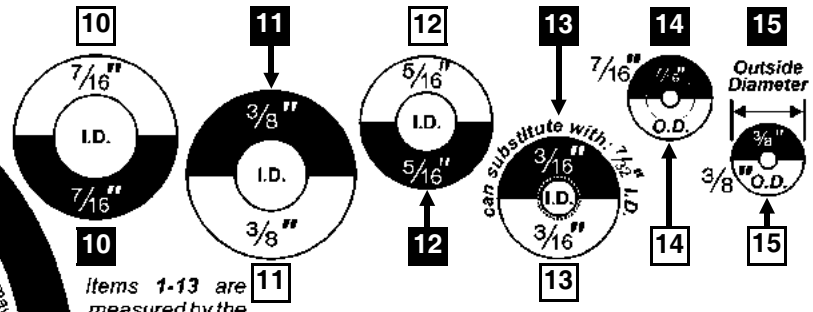

*Items **1-13** are measured by the Inside Diameter (I.D.). Items **1-9** and **11** are approximately 1/4" thick. Items **10, 12-15** are approximately 3/16" thick. Item **13** can also be a 7/32" I.D Ring. The size is imprinted on all Rings except for Items **14-15** (7/16" O.D. & 3/8" O.D.). Use this page as a guide to measure rings where the size imprint or mark does not exist. Size 2¼" I.D. (Black or White) was never used. Choose a Ring Size +/- ¼" I.D. if required.*

***Note:** Sizes larger than 3" I.D. currently available in **Black Only (Not Used)**: 3½" (545-5348-11); 4" (-12); 4½" (-13); 5" (-14); 5½" (-15); 6" (-16). Sizes Not Shown on this page, listed in the Parts Table below or are noted with **N/U** **(Not Used)** are currently not available.*

Nr.	RUBBER RINGS	QTY.	SPI PART Nr.
1	3" I.D. Rubber Ring **BLACK**		545-5348-10
	3" I.D. Rubber Ring **WHITE**		545-5348-60
2	2¾" I.D. Rubber Ring **BLK**		545-5348-20
	2¾" I.D. Rubber Ring WHT	*N/U*	*545-5348-70*
3	2½" I.D. Rubber Ring **BLK**		545-5348-09
	2½" I.D. Rubber Ring **WHT**		545-5348-59
4	2" I.D. Rubber Ring **BLACK**		545-5348-08
	2" I.D. Rubber Ring **WHITE**	2	545-5348-58
5	1¾" I.D. Rubber Ring **BLK**		545-5348-21
	*1¾" I.D. Rubber Ring **WHT***	*N/U*	*545-5348-71*
6	1½" I.D. Rubber Ring **BLK**		545-5348-07
	1½" I.D. Rubber Ring **WHT**	1	545-5348-57
7	1¼" I.D. Rubber Ring **BLK**		545-5348-06
	1¼" I.D. Rubber Ring **WHT**	1	545-5348-56
8	1" I.D. Rubber Ring **BLACK**		545-5348-05
	1" I.D. Rubber Ring **WHITE**	2	545-5348-55
9	¾" I.D. Rubber Ring **BLACK**		545-5348-04
	¾" I.D. Rubber Ring **WHITE**	3	545-5348-54
10	7/16" I.D. Rubber Ring **BLK**		545-5348-18
	7/16" I.D. Rubber Ring **WHT**		545-5348-68
11	3/8" I.D. Rubber Ring **BLACK**		545-5348-03
	*3/8" I.D. Rubber Ring **WHITE***	*N/U*	*545-5348-53*
12	5/16" I.D. Rubber Ring **BLK**		545-5348-02
	5/16" I.D. Rubber Ring **WHT**	6	545-5348-52
13	3/16" I.D. Rubber Ring **BLK**		545-5348-01
	3/16" I.D. Rubber Ring **WHT**	1	545-5348-51
14	7/16" O.D. Rubber Ring **BLK**	51	545-5348-17
	7/16" O.D. Rubber Ring **WHT**	5	545-5348-67
	***Note:** Item **14**, 7/16" O.D. Black Rings (Qty. **51**) are used to cusion the Bayonet Sockets under the playfield (between bracket & playfield).*		
15	3/8" O.D. Rubber Ring **BLK**		545-5348-19
	3/8" O.D. Rubber Ring **WHT**	1	545-5348-69
16	Small Flipper **BLACK** Ring *(Soft Duro)*		545-5207-00
	Small Flipper **RED** Ring *(Soft Duro)*		545-5207-22
17	Large Flipper **BLACK** Ring *(50 Duro)*		545-5277-00
	Large Flipper **YELLOW** Ring *(50 Duro) (use -06 40 Duro)*		545-5277-04
	Large Flipper **WHITE** Ring *(50 Duro)*		545-5277-08
	Large Flipper **RED** Ring *(Soft Duro)*	2	545-5277-22
18	O-Ring 11/32" I.D. X 7/32" O.D. X 1/16"	2	545-5850-00
	(Located inside Cabinet with each Flipper Button Assembly)		

Nr.	RUBBER BUMPER PADS	QTY.	SPI PART Nr.
A*	Bumper **BLK** Pad (Lg. w/ grommet)	3	545-5428-00
	*Item **B** are located on Flipper Assemblies. See next page for location.*		
B*	Bumper **BLK** Pad (Sm. w/ grommet)	6	545-5105-00
	*Item **B** are located on multiple assemblies. See next page for location.*		
C*	Bumper **BLUE** Pad (1.1" X 1")	**0**	626-5065-00

Nr.	RBR. BUMPER POST SLVS.	QTY.	SPI PART Nr.
	Bumper **RED** Post Sleeve (Tall)		545-5308-22
D*	Bumper **BLACK** Post Sleeve (Tall)	2	545-5308-00
	Bumper **WHITE** Post Sleeve (Tall)		545-5308-08
E*	Bumper Post Sleeve (Short)		545-5151-00

Take Note:

* An asterisk (*) indicates view of item on the Assembly Drawing only *(for location see next page). For better view(s), see **Drawings for Major Assemblies...** (**The Blue Pages**), Section **4**, Chapter **2**, (Page **81**), (view Table of Contents for exact page).*

Legend Note:
Items noted with a black square ■ are Black Rubber Parts.
Items noted with a white square □ are White Rubber Parts.

† The item type (size / description), the quantity and/or location used, are subject to change without notice. Service Bulletins will anounce any changes, if warranted.

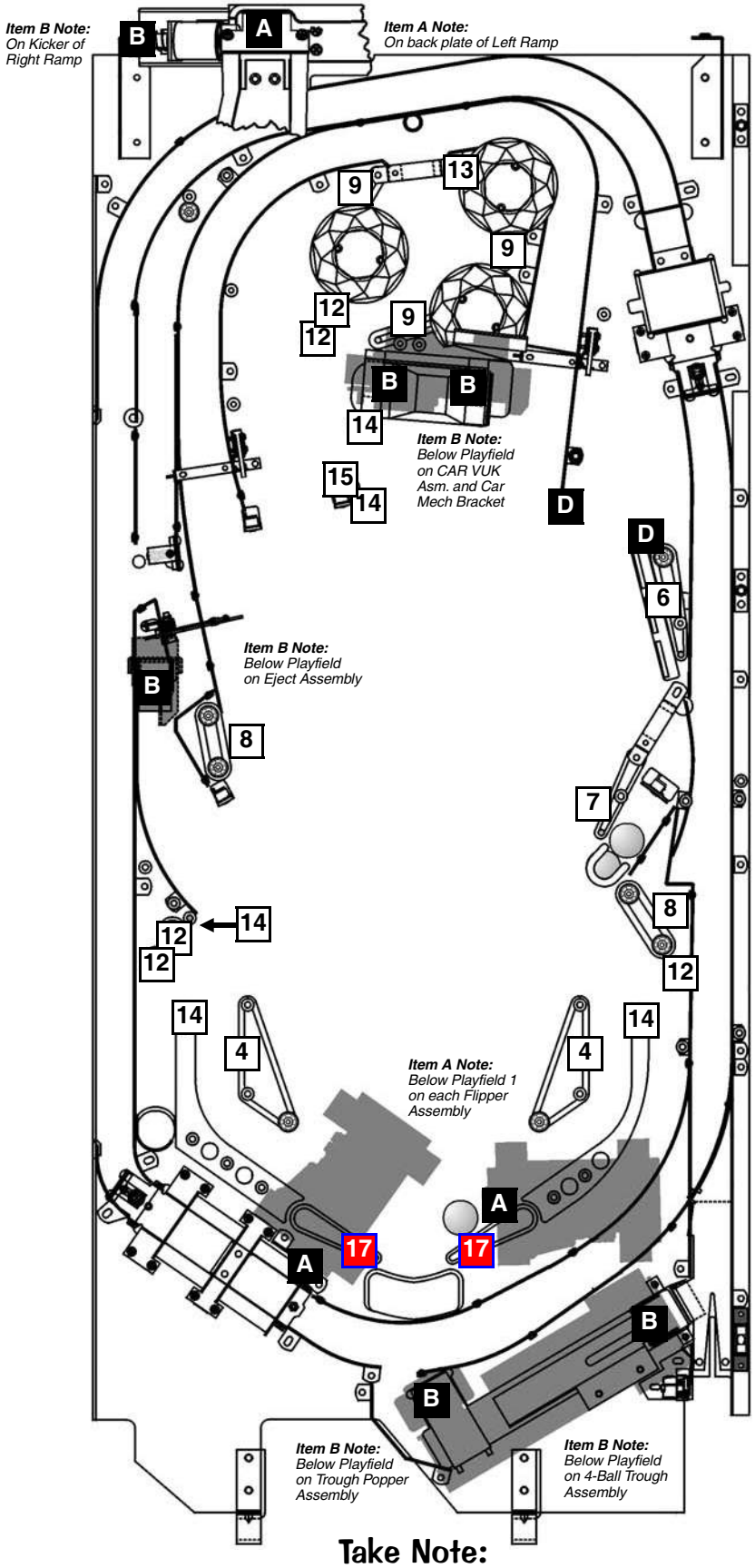

Take Note:

Legend Note:
Items noted with a black square ■ are Black Rubber Parts.
Items noted with a white square □ are White Rubber Parts.

† *The item type (size / description), the quantity and/or location used, are subject to change without notice. Service Bulletins will anounce any changes, if warranted.*

Playfield Top & Bottom - Small Bayonet Sockets & Bulbs ■ (Actual Size) †

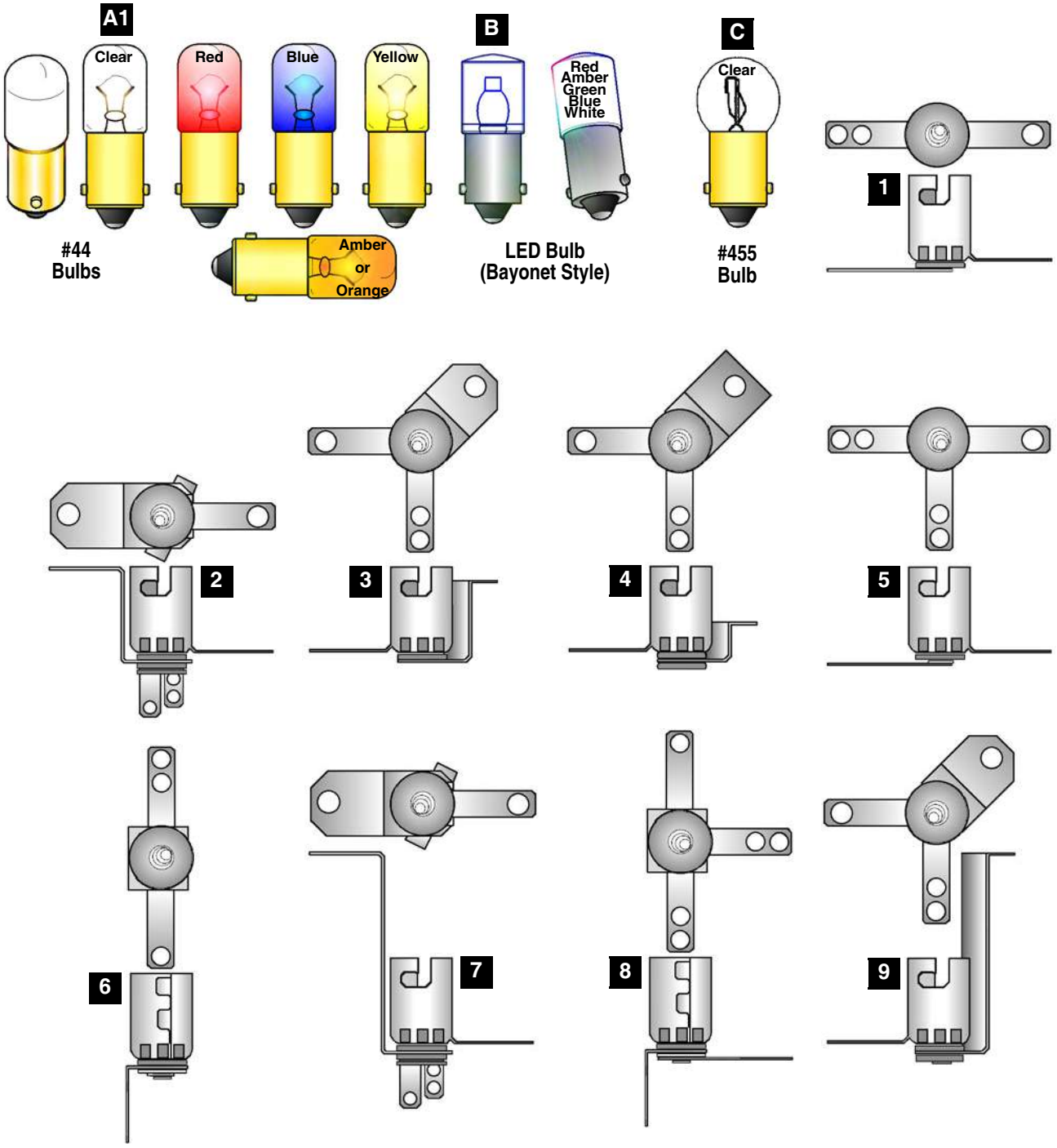

Nr.	BULBS (#44)	QTY.	SPI PART Nr.
A	#44 Bulb (Clear) *Heavy Filament*	54	**165-5000-44-HF**
	#44 Bulb (Yellow)	7	165-5053-06
	Item A Note: *Different Colors available (not used in this game) ~* **Red (165-5053-02); Amber (165-5053-03); Blue (165-5053-05); Orange (165-5053-07)**		

Nr.	BULBS (LED & #455)	QTY.	SPI PART Nr.
B	LED Module (WHT) **(12.8v 20-25mA) Bynt.**		112-5023-08
	Item B Note: *Different Colors available (not used in this game) ~* **Red (112-5023-02); Amber (112-5023-03); Green (112-5023-04); Blue (112-5023-05);**		
C	#455 Twinkle Bulb		165-5003-00

Nr.	SMALL BAYONET SOCKETS	QTY.	SPI PART Nr.
1	2-Lug Staple Down Socket	12	077-5000-00
2	3-Lug Stand-Up Socket (Med. Brkt.)		077-5008-00
3	2-Lug Stand-Up Socket (Med. Brkt.)		077-5002-00
4	2-Lug Stand-Up Sckt. (Short Bracket)	17	077-5002-31
5	3-Lug Staple Down Socket		077-5001-00
6	2-Lug Laydown Socket	2	077-5003-00
7	3-Lug Stand-Up Socket (Tall Bracket)	22	077-5009-00

Nr.	SMALL BAYONET SOCKETS	QTY.	SPI PART Nr.
8	3-Lug Laydown Socket (3 Lugs Flat)		077-5006-00
9	2-Lug Stand-Up Socket (Tall Bracket)		077-5005-00
10	3-Lug Stand-Up Long Shell Socket		077-5013-00
11	2-Lug Stand-Up Lg. Shell Socket (GIs)		077-5031-00
12	1-Lug S-U Lg. Shell Sckt. (Med. Brkt.)		077-5012-00
13	3-Lug Laydown Socket (2 Lugs Bent)	4	077-5032-00

† The item type (size / description), the quantity and/or location used, are subject to change without notice. Service Bulletins will anounce any changes, if warranted.

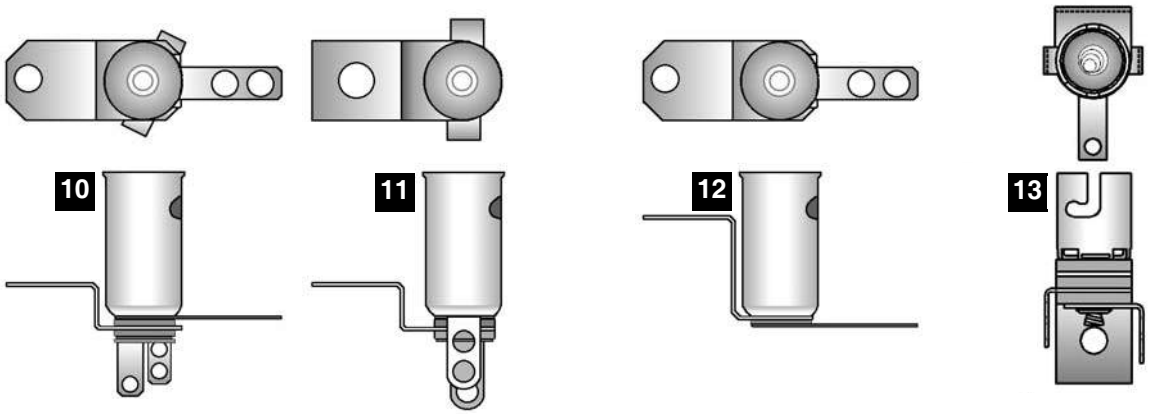

Playfield Bottom - Large Bayonet Sockets & Bulbs ■ (Actual Size) †

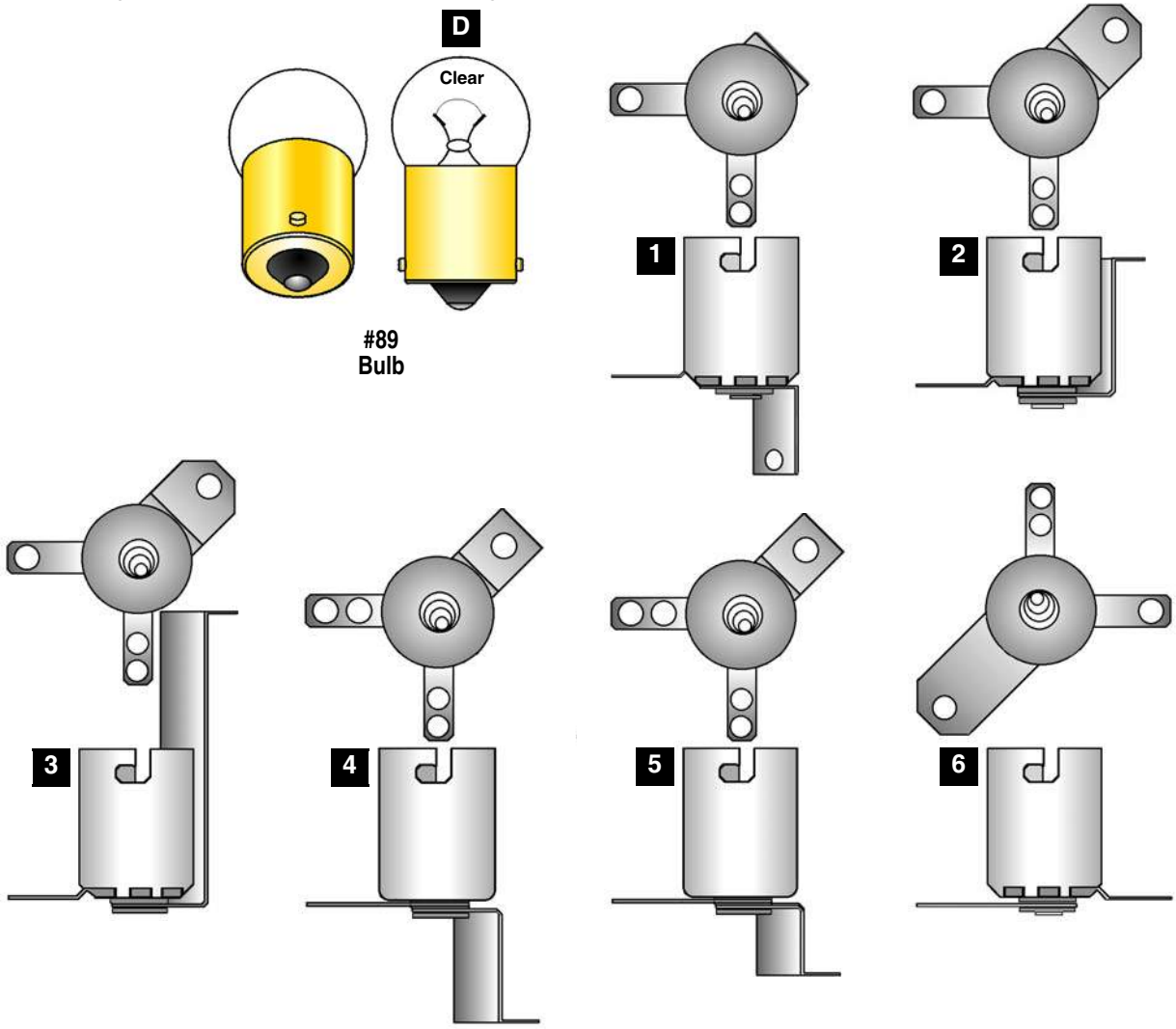

Nr.	BULBS (#89)	QTY.	SPI PART Nr.
D	#89 Bulb *Heavy Filament*	11	165-5000-89-HF

Nr.	LARGE BAYONET SOCKETS	QTY.	SPI PART Nr.	Nr.	LARGE BAYONET SOCKETS	QTY.	SPI PART Nr.
1	2-Lug Laydown Standard Socket	2	077-5100-00	4	2-Lug Stand-Up Rev. Mount Socket		077-5103-00
2	2-Lug Stand-Up Short Socket	3	077-5101-00	5	2-Lug Stand-Up Rv. Mnt. Short Socket	2	077-5106-00
3	2-Lug Stand-Up Long Socket	2	077-5102-00	6	2-Lug Straight Leg Socket		077-5107-00

† The item type (size / description), the quantity and/or location used, are subject to change without notice. Service Bulletins will anounce any changes, if warranted.

Playfield Top & Bottom - Wedge Base Sockets & Bulbs ■ (Actual Size) †

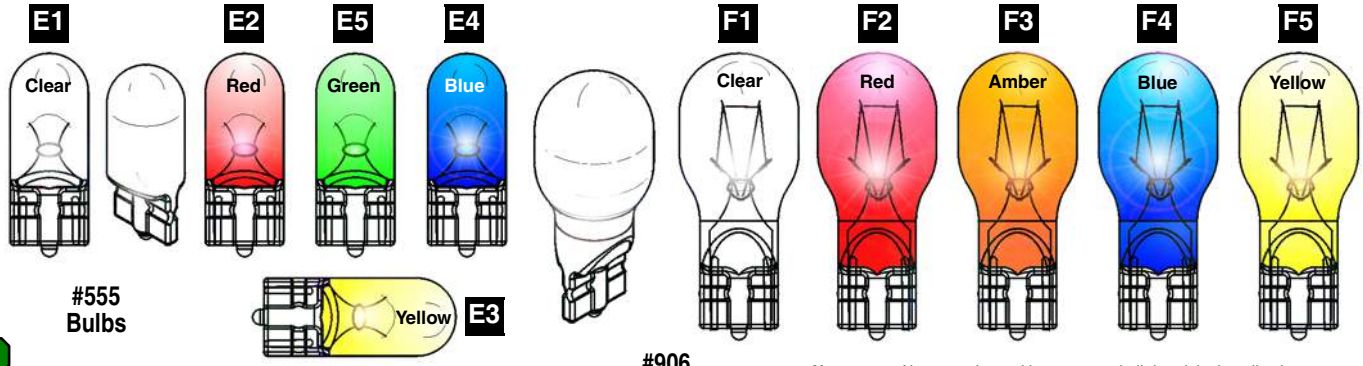

Note: *Always replace with same type bulb in original application.*

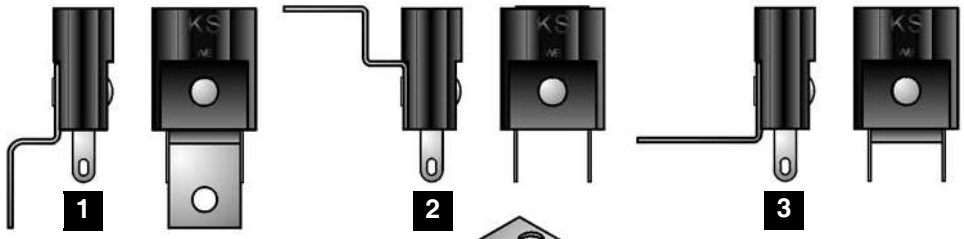

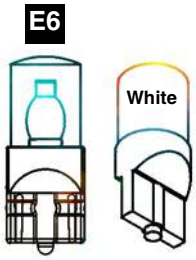

LED Bulb (Wedge Base)

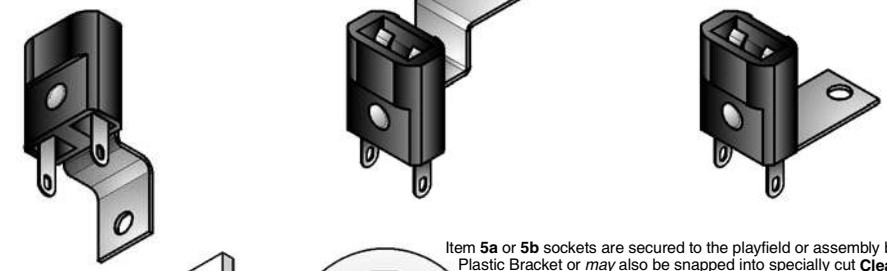

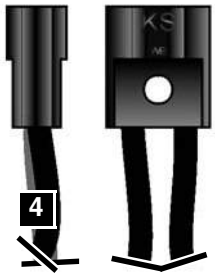

Item 4 Socket does not require brackets. Old stock may include "L" style brackets (each side); do not secure to assembly. ***Black Wires (Qty. 2) are 12" each.***

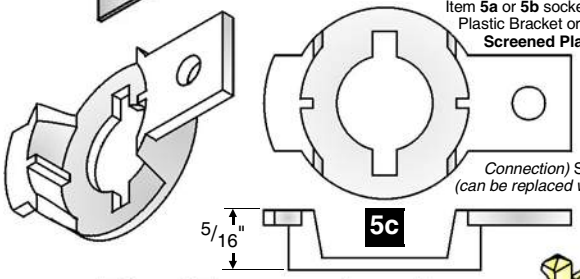

Item **5a** or **5b** sockets are secured to the playfield or assembly by Item **5c** Plastic Bracket or *may* also be snapped into specially cut **Clear and / or Screened Plastic Pieces** *(can be used when sockets are positioned closely together or in tight areas). If Plastic Pieces are used to mount some **5a** or **5b** Sockets, it will be noted on **Playfield Top - Plastics (Screened & Clear) Kit, ...,** Page **69**.*

Item **5a** is a solderless **IDC** *(Insulation Displacement Connection)* Socket with a built-in Diode, 1N4003 (112-5003-00) *(can be replaced with 1N4001 Diode, 112-5001-00).* Item **5b** Socket (Yellow) is identical to **5a** (Socket) *except* it does ***NOT REQUIRE*** a diode *(Flash Lamp usage).*

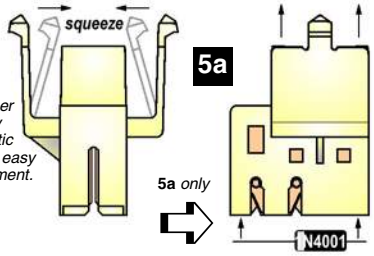

Just squeeze the "side arms" of the socket together and pull away from the plastic or bracket for easy Bulb replacement.

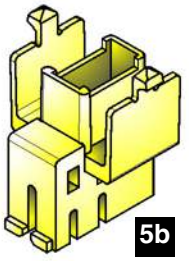

5b *is Yellow with* ***No Diode***

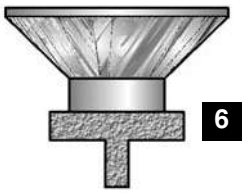

Nr.	BULBS (#555 & LED)	QTY.	SPI PART Nr.
E1	#555 Wedge Base Bulb (Clear)	65	165-5002-00
E2-E5	#555 Wedge Base Bulb (Multi-Color)		165-5054-XX
	Item E2-E5 Bulb Note: *Different Colors available (not used in this game) ~* **Red (165-5054-02); Green (165-5054-04); Blue (165-5054-05); Yellow (165-5054-06);**		
E6	LED Module (WHT) **(5v - 6.3v) Wedge Base**	3	112-5024-08
	Item E6 Bulb Note : *Typically used with Item 4 Socket in Pop Bumpers.*		

Nr.	BULBS (#906)	QTY.	SPI PART Nr.
F	#906 Wedge Base Bulb (Clear)	2	165-5004-00
	Item F Note: *Different Colors available (not used in this game) ~* **Red (165-5004-02); Amber (165-5004-03); Blue (165-5004-05); Yellow (165-5004-06)**		

Nr.	WEDGE BASE SOCKETS	QTY.	SPI PART Nr.
1	Wedge Base Socket (Laydown)		077-5026-01
2	Wedge Base Socket (Offset)		077-5029-00
3	Wedge Base Socket (Laydown GI)		077-5030-00
4	W.B. Socket (Bumpers/Special App.)	3	077-5206-00

Nr.	WEDGE BASE SOCKETS	QTY.	SPI PART Nr.
5a	IDC Snap-On Socket (Biege)	63	077-5216-00
5b	IDC Snap-On Socket ***No Diode*** (Yel.)		077-5216-**01**
5c	5/16" Ht. Bracket (White)	63	545-5760-18
6	Light Reflector (Silver Plastic)		545-5409-01
	Note Item 6 : *Typically used with Item 1 (but will fit on any similiar Wedge Base Socket).*		

† The item type (size / description), the quantity and/or location used, are subject to change without notice. Service Bulletins will anounce any changes, if warranted.

Drawings for Major Assemblies & Ramps (The Blue Pages)

View **Parts Id. & Location** (for parts not described in this chapter) in Section **4**, Chapter **1** of **2** (**Pink Pages**), Pages **59-80**.

Table of Contents & Overview

Drawings are provided for the Major Assemblies in this game with individual parts of each assembly numbered. Items noted with a white circle ◯ are mounted above the playfield; items noted with a black circle ● are mounted below. All numbered parts describe the **NAME**, **QUANTITY** & **PART NR. & ASSOCIATED PARTS** (AP-).

Ball Shooter (Plunger) / Autoplunger Arm... 82
4-Ball Trough 83
Under-Trough & Popper 84
Eject (VUK) / Ball Deflector (Top) 85
Flipper (Left) 86
Flipper (Right) 87
Slingshots (Left & Right) 88
Bumper Top, ... Bottom, 89
Hot Dog Sign Ind. Parts / Hot Dog Drive 90
2-Post Ball Diverter 91
Diverter (Left) Ind. Parts 92
Diverter (Rt.) Ind. Parts 93
'DISASSEMBLY FOR REPAIR' PROCEDURE BETWEEN 93 & 94
1-Coil (Ball Aclr.) Magnet 94
2-Coil (Ball Aclr.) Magnet 95
3-Bank Drop Target Assembly 96 97
Car Target Up-Down & Scoop (VUK) Ind. Parts... 98
'DISASSEMBLY FOR REPAIR' PROCEDURE BETWEEN 99 & 100 99
Right Plastic & Wire Ramps, Kicker & Diverter 100 101
'DISASSEMBLY FOR REPAIR' PROCEDURE BETWEEN 101 & 102
Left Plastic Ramp Parts 102
Bank Panel Ind. Parts 103
'DISASSEMBLY FOR REPAIR' PROCEDURE BETWEEN 103 & 104
UK Ball Deflector / UK Up/ Down Post 104

Important: Read all " Take Note: " items

Sec. 4: Drawings ...

Ball Shooter (Plunger) Assembly, 500-6146-00-04N (Items 1-8)

Nr.	BALL SHOOTER PARTS	QTY.	SPI PART Nr.
1	Housing (Shooter Assembly)	1	535-5067-02
	Item 1 is secured to the Cabinet by: Support Plate (Qty. 1) (535-5027-00), #10-32 X 1/2" PPH (Sems) Zinc TF (Qty. 3) (237-6033-00), #10 Split Lock Washer (Qty. 3) (244-5003-00) **and** #6 X 5/8" SHWH AB (Zinc) (Qty. 2) (234-5002-00)		
2	Rod Assembly *(with Black Knob)*	1	515-6557-00

Nr.	BALL SHOOTER PARTS	QTY.	SPI PART Nr.
3	Comp. Spring (**GREEN**, .035" ø)	1	266-5001-04
4	Compression Spring (Short Plunger)	1	266-5010-00
5	Bushing, 3/8" I.D. (Oilite)	2	280-5010-00
6	Washer, 3/8" I.D. X 5/8" O.D. X 1/16"	5	242-5014-00

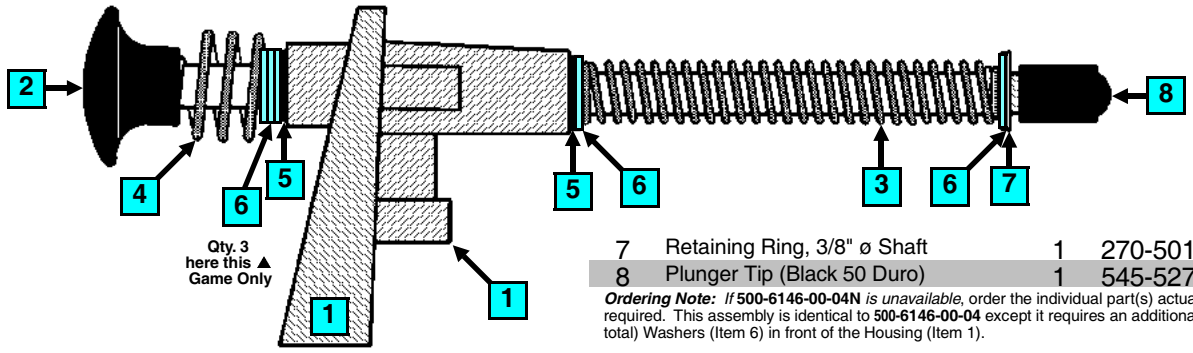

7	Retaining Ring, 3/8" ø Shaft	1	270-5012-00
8	Plunger Tip (Black 50 Duro)	1	545-5276-00

Ordering Note: *If* **500-6146-00-04N** *is unavailable*, order the individual part(s) actually required. This assembly is identical to **500-6146-00-04** except it requires an additional 2 (3 total) Washers (Item 6) in front of the Housing (Item 1).

Autoplunger Arm Weld Assembly, 500-6091-00 (Items 1-5) Autoplunger Coil Assembly, 500-6092-02B (Items 6-9) and Shooter Lane Switch Assembly, 500-6930-00 (Items 10-12)

Nr.	AUTOPL. ARM WELD PARTS	QTY.	SPI PART Nr.
1	Arm Weld Assembly	1	515-6526-00
	Item 1 is secured to Item 2 by: Retaining Ring, 1/4" ø Shaft (Qty. 1) (270-5002-00)		
2	Autoplunger Fulcrum	1	535-7697-00
3	Nyliner, 1/4" (Thomson #4I1-FF)	2	545-5423-00
4	Plunger & Link Assembly	1	515-5338-00
	Item 4 is secured to Item 1 by: Retaining Ring, 1/4" ø Shaft (Qty. 1) (270-5002-00) ***For Individual Items use :*** Plunger 2" Lg. (**530-5025-01**), Plunger Link (**545-5293-00**) **and** Roll Pin 1/8" ø x 5/8" Lg. (**251-5008-00**)		
5	Compression (Return) Spring	1	266-5020-00

(ASM. REF. 500-6091-00, Items 1-5)

Nr.	AUTOPLNGR. COIL PARTS	QTY.	SPI PART Nr.
6	Autoplunger Coil Bracket Assembly	1	515-6527-00
	Items 1 & 6 are secured below the P/F by: #8 X 1/2" SHWH AB (Zc.) (Qty. 9) (234-5101-00)		
7	Coil Retainer Bracket	1	535-5203-03
	Item 7 is secured to Item 6 by: #8-32 X 1/4" PPH MS (Sems) Zinc (Qty. 2) (232-5300-00)		
8	Coil, 24-940	1	090-5036-00B
	Coil has a Diode (1N4004) (112-5003-00) positioned @ bot. (below lugs opposite windings).		
9	Coil Sleeve	1	545-5031-00

(ASM. REF. 500-6092-03B, Items 6-9)

Nr.	SWITCH PARTS	QTY.	SPI PART Nr.
10	Switch *(for Shooter Lane)*	1	180-5200-00
	Switch has a Diode (1N4004) (112-5003-00). *Can be replaced with (1N4001) (112-5001-00).*		
11	Switch Mounting Bracket	1	535-9742-00
	Item 11 is secured to Playfield by: #8 X 1/2" SHWH AB (Zinc) (Qty. 2) (234-5101-00)		
12	Switch Body Protect Plate	1	535-6539-00
	Item 12 is secured to Items 10-11 by: #2-56 X 7/16" PPH MS Sems (Zinc) (Qty. 2) (237-5872-01)		

(ASM. REF. 500-6930-00, Items 10-12)

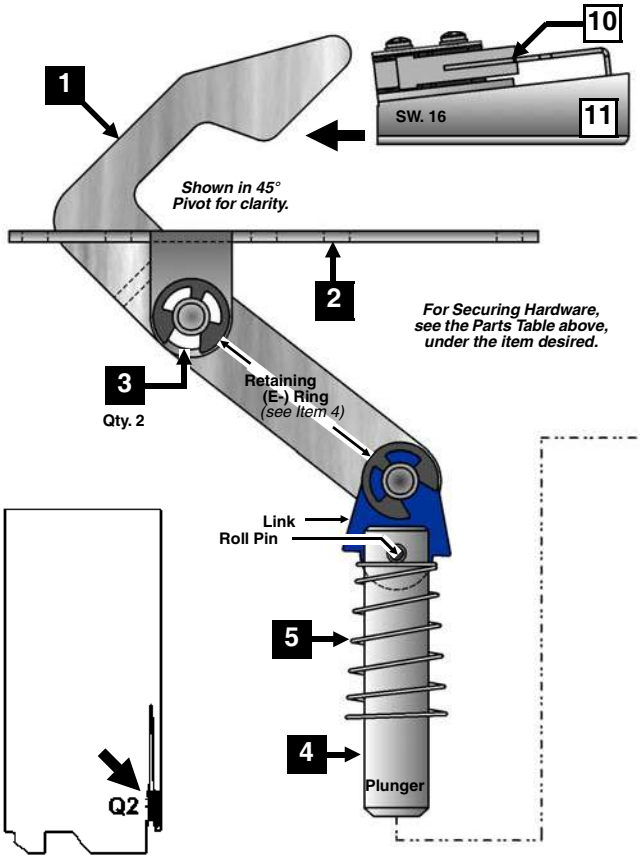

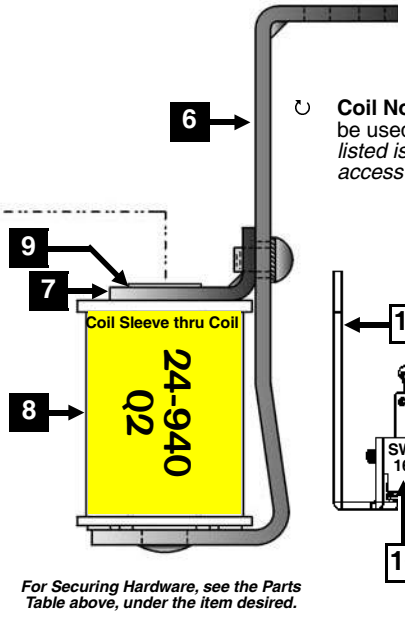

Take Note:

↻ **Coil Note:** ↻ Either -00**B** *or* -00**T** can be used for coil replacements. *B/T listed is preferable for easier diode access & may differ on game.*

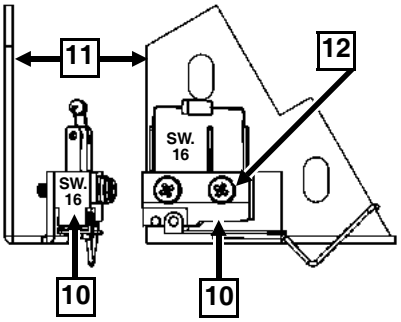

4-Ball Trough Assembly, 500-6318-24-86 (Items 1-13)
and Associated Parts: See Parts Table Below.

Please Note: Items 1 & AP-A have been modified to work on this game only (note Part Numbers).

Nr.	4-BALL TROUGH PARTS	QTY.	SPI PART Nr.
1	Ball Trough Outhole M'nting Bracket ***Modified***	1	**515-6580-86**
	Item 1 is secured below the playfield by: #8 X 1/2" SHWH AB (Zc.) (Qty. 4) (234-5101-00)		
2	Coil Mounting Bracket	1	535-7330-01
	Item 2 is secured to Item 1 by: #8-32 X 3/8" HWH Swage (Sr.) Zinc (Qty. 4) (237-5975-00)		
3	Coil Retaining Bracket	1	535-5203-03
	Item 3 is secured to Item 2 by: #8-32 X 1/4" SHWH (Serr) Zinc (Qty. 2) (237-5975-04)		
4	Coil, 26-1200	1	090-5044-00T
	Coil has a Diode (1N4004) (112-5003-00) positioned @ top (above lugs next to windings).		
5	Coil Sleeve (Short) (Formost #10-7077)	1	545-5076-01
6	Steel & Nylon Plunger Assembly	1	515-5941-01
7	Compression (Return) Spring	1	266-5020-00
8	Rubber Bumper (Grommet)	1	545-5105-00
9	Micro Switch **(Roller Actuator, Lite-Force)**	3	180-5119-02
	Item 9 requires: Heat Shrink Tubing 1/8" ø PUI-24 (Qty. 1"/per) (605-5006-00)		
	Switch has a Diode (1N4004) (112-5003-00). *Can be replaced with (1N4001) (112-5001-00).*		
10	*Sw. Body Protect Plate (Not Required* w/# 11)	**0**	535-6539-00
11	Trough Ball Guide Plate	1	535-7801-00
	Item 11 is secured to Item 1 by: 1/4" X 5/16" X .144" I.D. Spacer Tap. (Qty. 1) (254-5014-03) **and** #2-56 X 1/2" HWH (Ser) UNS #4HD TR3 BO (Qty. 4) (237-5937-02)		

Nr.	4-BALL TROUGH PARTS	QTY.	SPI PART Nr.
12	Dual OPTO TRANS Board Assembly	1	515-0173-00
13	Dual OPTO REC Board Assembly	1	515-0174-00
	Items 12 & 13 are secured by: #6-32 X 5/8" HWH Swg (Ser) Zc (Qty. 3/per) (237-5976-04) ***For Individual Items use :*** Dual OPTO Transmitter Board (Qty. 1) (**520-5173-00**), Dual OPTO Receiver Board (Qty. 1) (**520-5174-00**), OPTO PCB Tube Spacer (Brass) (Qty. 3/per) (**530-5308-02**) **and** OPTO PCB Rubber Grommet (Qty. 3/per) (**545-5518-00**)		

Ordering Note: *If* **500-6318-24-86** *is unavailable*, order the individual part(s) actually required. This assembly is identical to **500-6318-24** except for the **Item 1** *(mounting bracket was modified to accomodate the Trough Popper Assembly, see Page **84**).*

ASSOCIATED PARTS **ARE NOT INCLUDED** WITH THE ABOVE ASSEMBLY.

Nr.	ASSOCIATED PART(S)	QTY.	SPI PART Nr.
AP-A	Ball Trough Enter/Exit Scoop ***Modified***	1	**535-7329-01-86**
	Item AP-A secured above the playfield (THIS GAME ONLY) by: 1/4" X 3/8" Plastic Spacer Gray (Qty. 4) (254-5000-02) **and** #8 X 5/8" SHWH AB (Green) (Qty. 4) (234-5102-04).		
AP-B	Bracket, Ball Trough Stop ***This Game Only***	1	535-9743-00
	Item AP-B is secured above the Playfield by: #6 X 1/2" HWH AB (Zinc) Red (Qty. 2) (234-5001-02)		
AP-C	* Steel Balls (1-1/16" ø)	**6**	260-5000-00
	Quantity of 4 used in this 4-Ball Trough Assembly (2 are captive balls on the Playfield).		

Take Note:

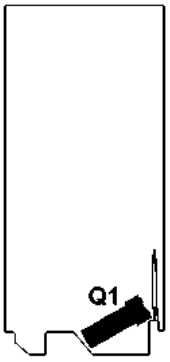

* An asterisk (*) indicates item(s) are not noted in the pictorials.

↻ **Coil Note:** ↻ Either -00**B** *or* -00**T** can be used for coil replacements. *B/T listed is preferable for easier diode access & may differ on game.*

For a break-down of parts of Items **12** & **13**, **OPTO Boards** (**515-0173-00** & **515-0174-00**), *see Section **5**, Chapter **4**, **Trough Up-Kicker Dual OPTO Boards Theory of Operation & Schematic**, **Component Layout & Parts**.*

Take Special Note:

Item **AP-A**, Enter / Exit Scoop ***Modified***, **535-7329-01-86** (*not included with the 4-Ball Trough Assembly),* is shown how it is actually positioned over the 4-Ball Trough Assembly.

▶ ***It is mounted raised above the playfield with the use of four (4) 1/4" X 3/8" Plastic Spacers (254-5000-02).***

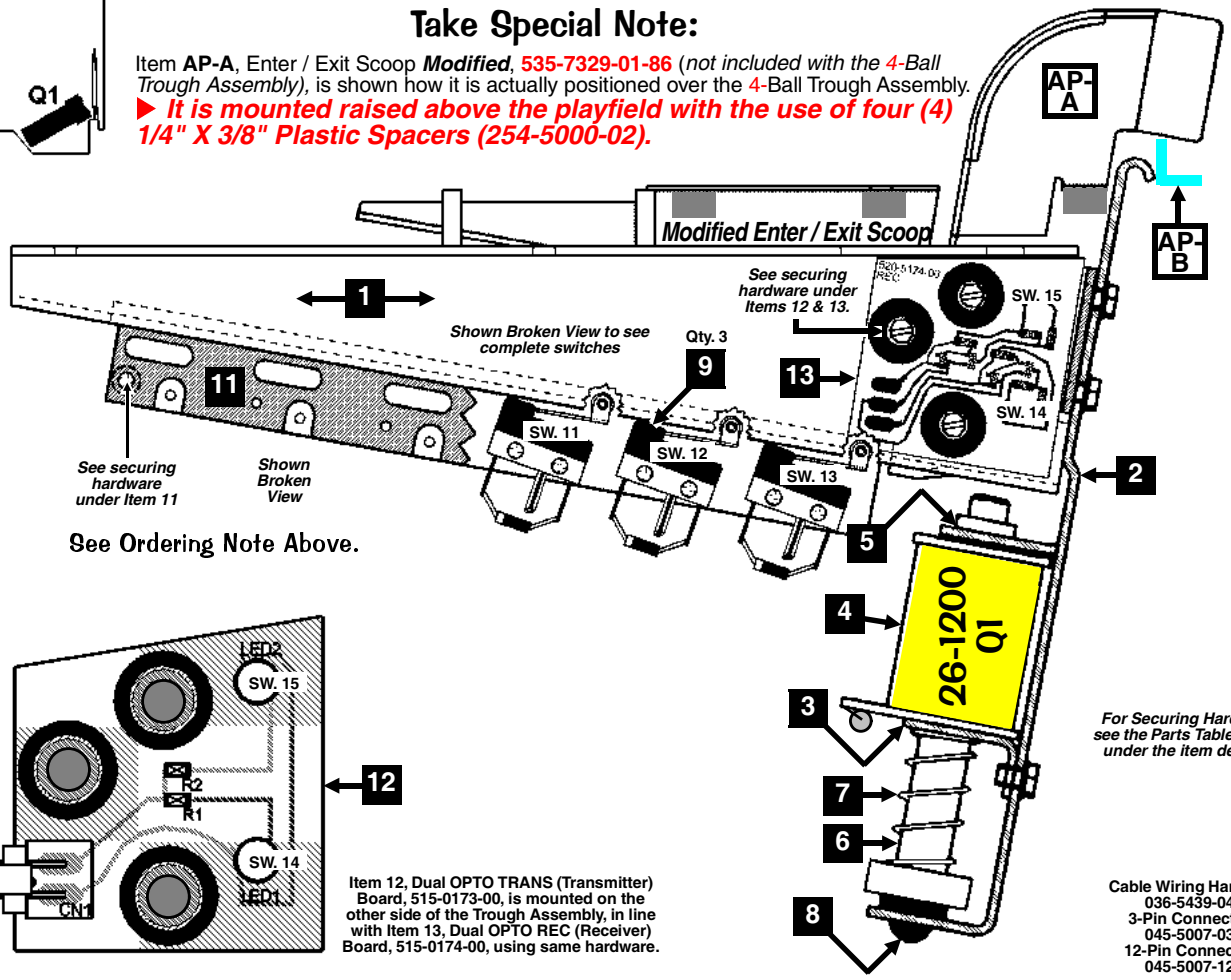

Trough Popper Assembly, 500-6850-00 (Items 1-10)

and

Plastic Under-Trough (below) Individual Parts Only (Items A, B & C)

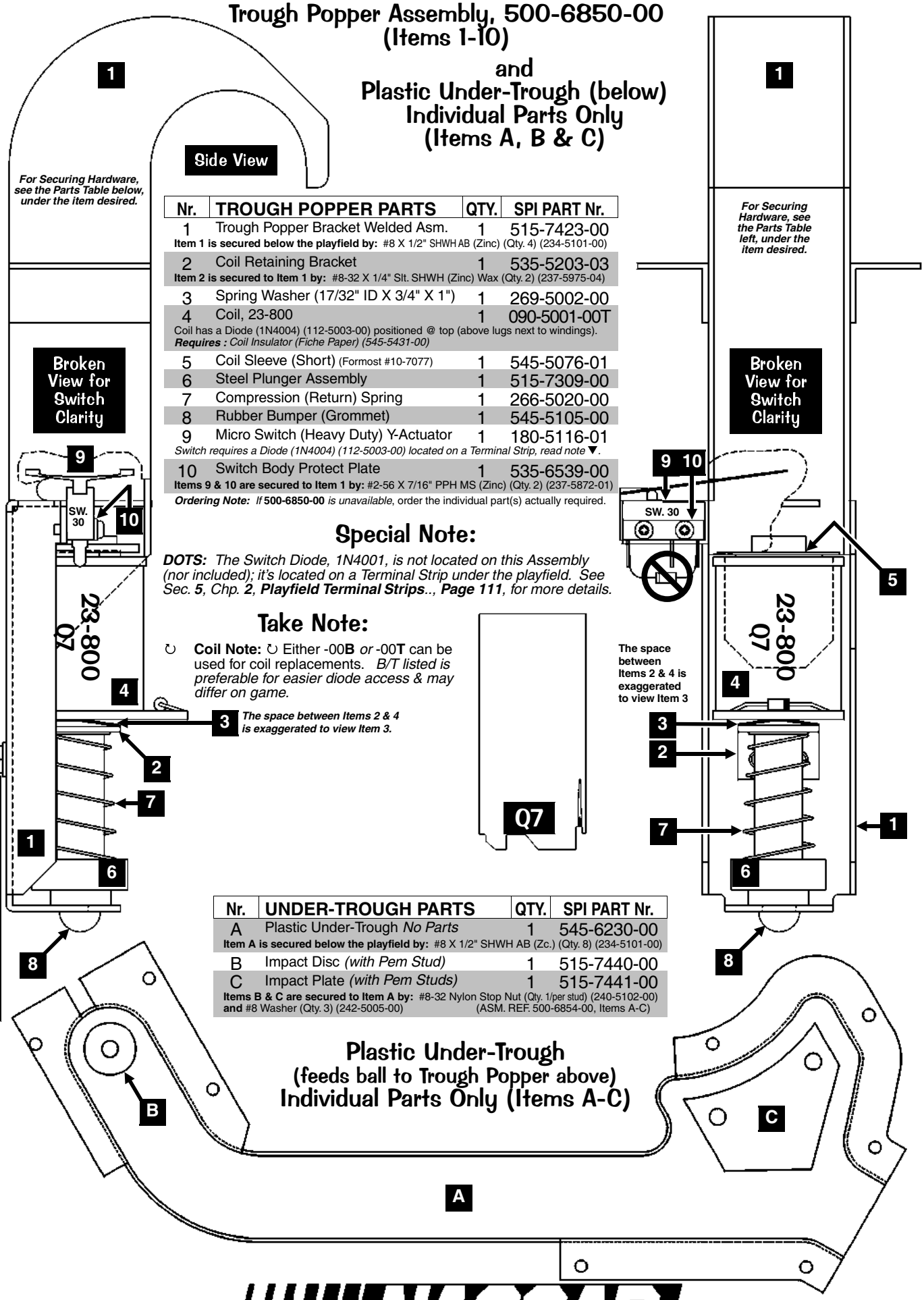

Nr.	TROUGH POPPER PARTS	QTY.	SPI PART Nr.
1	Trough Popper Bracket Welded Asm.	1	515-7423-00
	Item 1 is secured below the playfield by: #8 X 1/2" SHWH AB (Zinc) (Qty. 4) (234-5101-00)		
2	Coil Retaining Bracket	1	535-5203-03
	Item 2 is secured to Item 1 by: #8-32 X 1/4" Slt. SHWH (Zinc) Wax (Qty. 2) (237-5975-04)		
3	Spring Washer (17/32" ID X 3/4" X 1")	1	269-5002-00
4	Coil, 23-800	1	090-5001-00T
	Coil has a Diode (1N4004) (112-5003-00) positioned @ top (above lugs next to windings). ***Requires :*** *Coil Insulator (Fiche Paper) (545-5431-00)*		
5	Coil Sleeve (Short) (Formost #10-7077)	1	545-5076-01
6	Steel Plunger Assembly	1	515-7309-00
7	Compression (Return) Spring	1	266-5020-00
8	Rubber Bumper (Grommet)	1	545-5105-00
9	Micro Switch (Heavy Duty) Y-Actuator	1	180-5116-01
	Switch requires a Diode (1N4004) (112-5003-00) located on a Terminal Strip, read note ▼.		
10	Switch Body Protect Plate	1	535-6539-00
	Items 9 & 10 are secured to Item 1 by: #2-56 X 7/16" PPH MS (Zinc) (Qty. 2) (237-5872-01)		

Ordering Note: *If* **500-6850-00** *is unavailable*, order the individual part(s) actually required.

Special Note:

DOTS: *The Switch Diode, 1N4001, is not located on this Assembly (nor included); it's located on a Terminal Strip under the playfield. See Sec.* ***5****, Chp.* ***2****,* ***Playfield Terminal Strips****.., Page 111, for more details.*

Take Note:

↻ **Coil Note:** ↻ Either -00**B** *or* -00**T** can be used for coil replacements. *B/T listed is preferable for easier diode access & may differ on game.*

Nr.	UNDER-TROUGH PARTS	QTY.	SPI PART Nr.
A	Plastic Under-Trough *No Parts*	1	545-6230-00
	Item A is secured below the playfield by: #8 X 1/2" SHWH AB (Zc.) (Qty. 8) (234-5101-00)		
B	Impact Disc *(with Pem Stud)*	1	515-7440-00
C	Impact Plate *(with Pem Studs)*	1	515-7441-00
	Items B & C are secured to Item A by: #8-32 Nylon Stop Nut (Qty. 1/per stud) (240-5102-00) **and** #8 Washer (Qty. 3) (242-5005-00) (ASM. REF. 500-6854-00, Items A-C)		

Plastic Under-Trough (feeds ball to Trough Popper above) Individual Parts Only (Items A-C)

Eject VUK (Vertical Up-Kicker) Assembly, 500-6846-00 (Items 1-10)

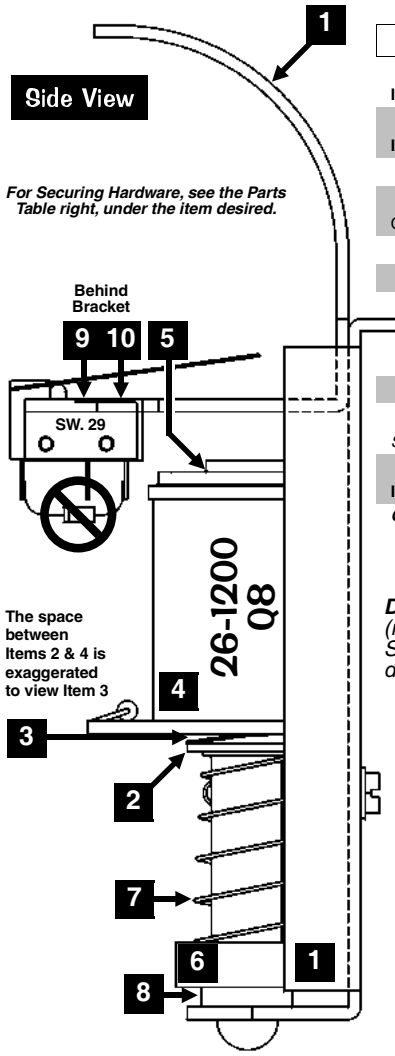

For Securing Hardware, see the Parts Table right, under the item desired.

Nr.	EJECT VUK PARTS	QTY.	SPI PART Nr.
1	Eject VUK Bracket	1	535-9637-00
	Item 1 is secured below the playfield by: #8 X 1/2" SHWH AB (Zinc) (Qty. 4) (234-5101-00)		
2	Coil Retaining Bracket	1	535-5203-03
	Item 2 is secured to Item 1 by: #8-32 X 1/4" Slt. SHWH (Zinc) Wax (Qty. 2) (237-5975-04)		
3	Spring Washer (17/32" ID X 3/4" X 1")	1	269-5002-00
4	Coil, 26-1200	1	090-5044-00T
	Coil has a Diode (1N4004) (112-5003-00) positioned @ top (above lugs next to windings).		
5	Coil Sleeve (Short) (Formost #10-7077)	1	545-5076-01
6	Steel Plunger Assembly	1	515-7309-00
7	Compression (Return) Spring	1	266-5020-00
8	Rubber Bumper (Grommet)	1	545-5105-00
9	Micro Switch (Heavy Duty) Y-Actuator	1	180-5116-01
	Switch requires a Diode (1N4004) (112-5003-00) located on a Terminal Strip, read note ▼.		
10	Switch Body Protect Plate	1	535-6539-00
	Items 9 & 10 are secured to Item 1 by: #2-56 X 7/16" PPH MS (Zc.) (Qty. 2) (237-5872-01)		

Ordering Note: *If* **500-6850-00** *is unavailable*, order the individual part(s) actually required.

Special Note:

DOTS: *The Switch Diode, 1N4001, is not located on this Assembly (nor included); it's located on a Terminal Strip under the playfield. See Section* ***5****, Chapter* ***2****,* ***Playfield Terminal Strips****.,* ***Page 111****, for more details.*

uring Hardware, 'arts Table above, 'e item desired.

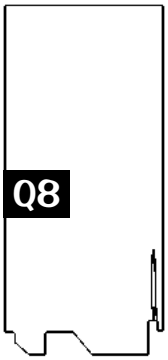

The space between Items 2 & 4 is exaggerated to view Item 3.

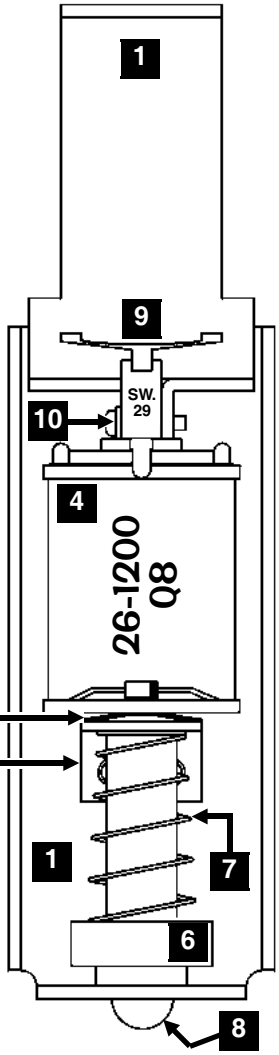

Take Note:

↻ **Coil Note:** ↻ Either -00**B** *or* -00**T** can be used for coil replacements. *B/T listed is preferable for easier diode access & may differ on game.*

Ball Deflector (Top Orbit) Assembly, 500-6841-00 (Items 1-8)

Nr.	BALL DEFLECTOR PARTS	QTY.	SPI PART Nr.
1	Ball Deflector Coil Mounting Bracket	1	535-6857-04
	Item 1 is secured below playfield by: #8 X 1/2" SLT SHWH AB (Zc) (Qty. 4) (234-5101-00)		
2	Coil Retaining Bracket	1	535-5203-03
	Item 2 is secured by: #8-32 X 1/4" PPH MS (Sems) Zinc (Qty. 2) (232-5300-00)		
3	Spring Washer, 17/32" ID X 3/4" X 1"	1	269-5002-00
4	Coil, 26-1200	1	090-5044-00T
	Coil has a Diode (1N4004) (112-5003-00) positioned @ top (above lugs next to windings).		
5	Coil Sleeve (Short) (Formost #10-7077)	1	545-5076-01
6	Solid Plunger Assembly *(Tapered Top)*	1	515-7089-00
7	Compression (Relay) Spring	1	266-5022-01
8	#10-32 x 1-1/4" PPH Adjustment Scr.	1	237-5708-00

Ordering Note: *If* **500-6841-00** *is unavailable*, order the individual part(s) actually required.

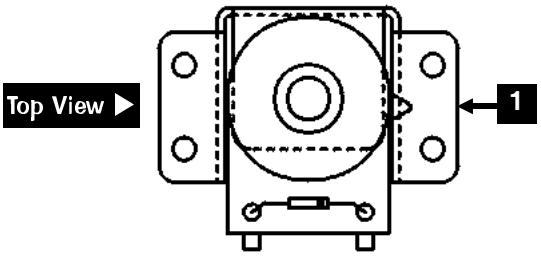

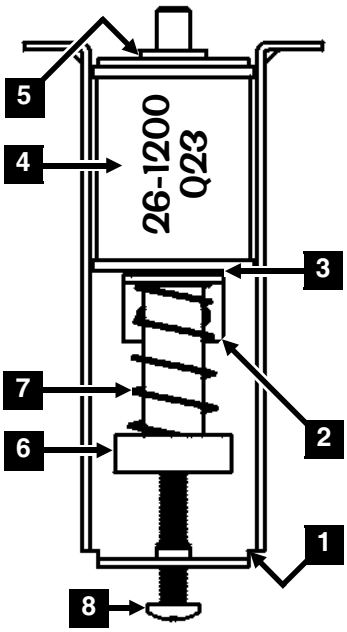

Take Note:

↻ **Coil Note:** ↻ Either -00**B** *or* -00**T** can be used for coil replacements. *B/T listed is preferable for easier diode access & may differ on game.*

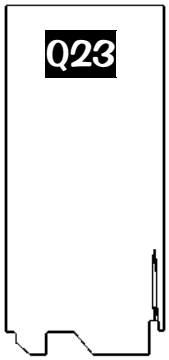

Flipper (Left) Assembly, 500-6543-14 (Items 1-15)
and Assoc. Parts: Yellow Flipper Bat & Shaft Assy., 515-5133-06-06 (Items AP-A/-B)

Nr.	FLIPPER (LEFT) PARTS	QTY.	SPI PART Nr.
1	Flipper Base Plate (**LEFT**)	1	**See FRP1**
	Item 1 is secured below the playfield by: #10 X 1/2" HWH MS (Serr) Zinc ST (Qty. 8) (237-5949-00) ***Ordering Note:*** *Use Item **FRP1**, see the end of this Parts Table.*		
2	Flipper Bat Bushing (White Plastic) 1/4" ø I.D.	1	545-5070-00
	Item 2 is secured to Item 1 by: #6-32 X 3/8" HWH Swage (Ser.) Zc. (Qty. 3) (237-5976-02)		
3	Power (EOS / End-of-Stroke) Switch	1	180-5149-00
	Item 3 is secured to Item 1 by: #6-32 X 5/8" HWH Swage (Ser.) Zc. (Qty. 2) (237-5976-04)		
4	Sw. Plate/Spring Return Brkt. (**LEFT**)	1	535-7354-**01**
5	Flipper Return Spring	1	265-5035-00
6	Coil Stop Bracket Sub-Assembly	1	515-6308-01
	Item 6 is secured to Item 1 by: #10-32 X 3/8" SHWH Swage (Serr) Zinc (Qty. 2) (237-5985-00) **and** #10 Split Lock Washer (Qty. 2) (244-5003-00)		
7	Spring Washer (17/32" ID X 3/4" X 1")	1	269-5002-00
8	Coil Support Bracket	1	535-7356-00
	Item 8 is secured to Item 1 by: #8-32 X 3/8" HWH Swage (Ser.) Zc. (Qty. 2) (237-5975-00)		
9	Coil, 23-1100 (ORANGE) (Left)	1	090-5030-00T
	Coil has a Diode (1N4004) (112-5003-00) positioned @ top (above lugs next to windings).		
10	Coil Sleeve	1	545-5388-00
11	Deflector Pad (Bumper)	1	545-5428-00
12	Flipper Plunger & Link Sub-Assy.	1	515-6304-03
	For Individual Items use : Flipper Plunger (**530-5349-01**) **and** Plunger "Flipper" Link (**545-5611-01**) **and is secured to the Plunger by:** Bushing, .16" ø ID X .281" ø OD X .187" (Qty. 1) (530-5532-00) **and** Spiral Pin ø 5/32" X 3/4" Lg. (Qty. 1) (251-5015-02)		

Nr.	FLIPPER (LEFT) PARTS	QTY.	SPI PART Nr.
13	Crank Bar	1	530-5070-02
	Item 13 requires: Bushing, .192" ø ID X .312" ø OD X .195" (Qty. 1) (530-5139-00)		
14®	Switch Actuator (**LEFT**) Sub-Assy.	1	515-7257-**01**
	For Individual Items use : Actuator & Spring Bracket (**LEFT**) (**535-9038-01**) **and** ® Switch Actuator (White Plastic) (**545-5612-00**) **and is secured to the Bracket by:** Rivet, 1/8" ø X 1/4" Lg. (Qty. 1) (249-5003-00)		
15	Set Screw: #10-32 X 3/4" Socket Hd.	2	237-6144-00
	Item 15 requires: #10-32 Nylon Stop Nut (Qty. 1 *Flipper Link Side Only*) (240-5203-00) **and** #10 Split Lock Washer (244-5003-00) ***Tool Required for Item 15:*** **5/32" or 4mm Allen Wrench**		

Flipper Rebuild Parts for Easier Installation, $ave $:

FRP1	**Flipper Base Plate Kit (LEFT)** *Includes Item 1 pre-threaded, with the Securing Hardware for Items 2, 3, 6 & 8.*	515-6617-**01**
FRP2	**Plunger, Link & Crank (LEFT) Assy.** *Includes above Items 12, 13, 14 and 15 and is pre-assembled.*	515-7203-**01**
FRP3	**Flipper (LEFT) Rebuild Kit** *Same as **FRP2**, but also includes above Items 6 & 10.*	500-6307-**10**

ASSOCIATED PARTS **ARE NOT INCLUDED** WITH THE ABOVE ASSEMBLY.

Nr.	ASSOCIATED PART(S)	QTY.	SPI PART Nr.
AP-A	**YELLOW** Flipper Bat (Plain) & Shaft (Non-Knurled End) Assembly	1	515-5133-06-06
AP-B	Large Flipper **RED** Rubber Ring	1	545-5277-22

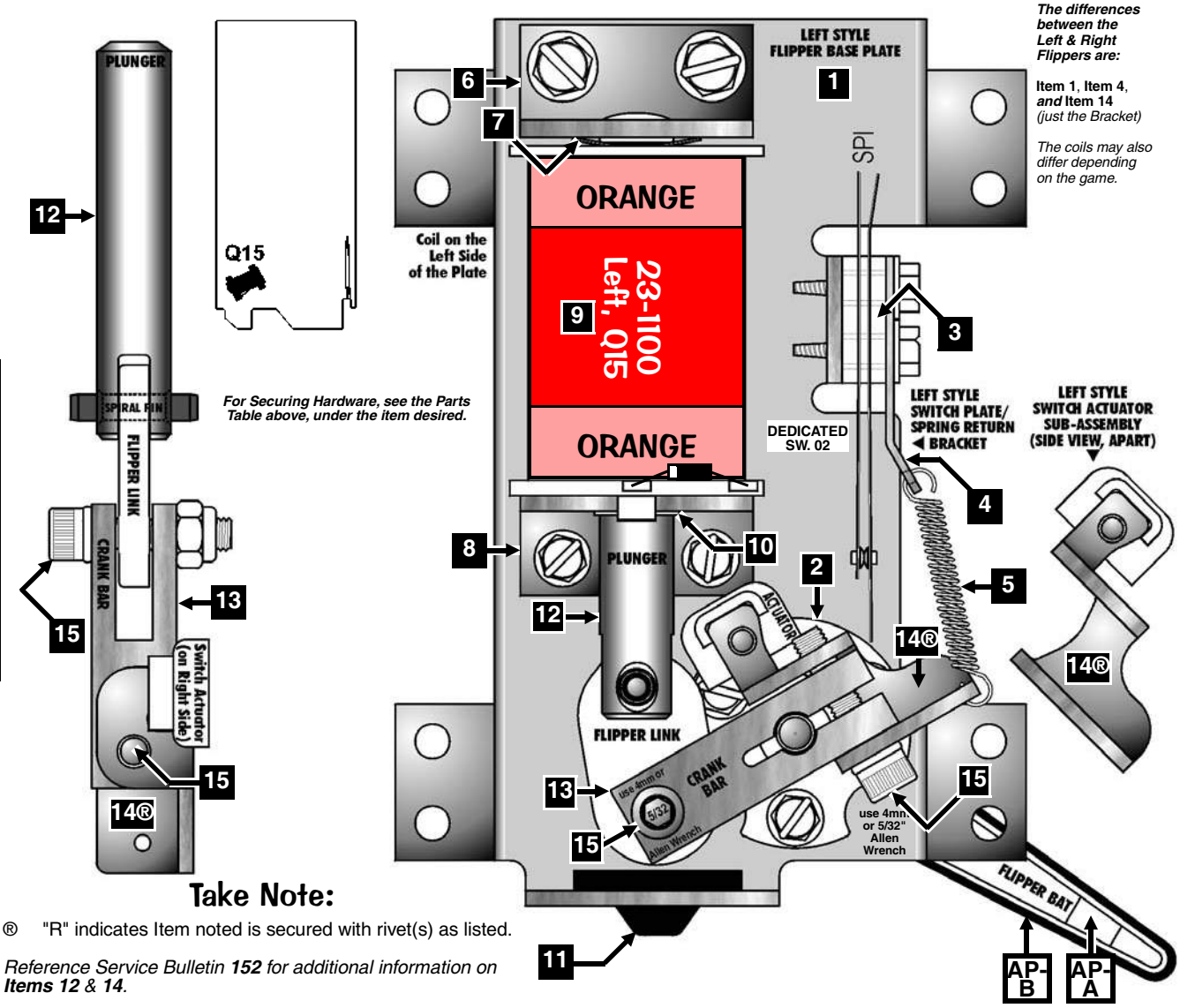

The differences between the Left & Right Flippers are:

Item 1, **Item 4**, ***and*** **Item 14** *(just the Bracket)*

The coils may also differ depending on the game.

Take Note:

® "R" indicates Item noted is secured with rivet(s) as listed.

*Reference Service Bulletin **152** for additional information on **Items 12** & **14**.*

** To Order the Flipper (Left) Rebuild Kit ask for Part Nr.: 500-6307-10 (includes Items 6, 10, 12, 13, 14 & 15)*

Flipper (Right) Assembly, 500-6543-04 (Items 1-15)
and Assoc. Parts: Yellow Flipper Bat & Shaft Assy., 515-5133-06-06 (Items AP-A/-B)

Nr.	FLIPPER (RIGHT) PARTS	QTY.	SPI PART Nr.
1	Flipper Base Plate (**RIGHT**)	1	**See FRP1**
	Item 1 is secured below the playfield by: #10 X 1/2" HWH MS (Serr) Zinc ST (Qty. 8) (237-5949-00) ***Ordering Note:*** *Use Item **FRP1**, see the end of this Parts Table.*		
2	Flipper Bat Bushing (White Plastic) 1/4" ø I.D.	1	545-5070-00
	Item 2 is secured to Item 1 by: #6-32 X 3/8" HWH Swage (Ser.) Zc. (Qty. 3) (237-5976-02)		
3	Power (EOS / End-of-Stroke) Switch	1	180-5149-00
	Item 3 is secured to Item 1 by: #6-32 X 5/8" HWH Swage (Ser.) Zc. (Qty. 2) (237-5976-04)		
4	Sw. Plate/Spring Return Brkt. (**RIGHT**)	1	535-7354-**00**
5	Flipper Return Spring	1	265-5035-00
6*	Coil Stop Bracket Sub-Assembly	1	515-6308-01
	Item 6 is secured to Item 1 by: #10-32 X 3/8" SHWH Swage (Serr) Zinc (Qty. 2) (237-5985-00) **and** #10 Split Lock Washer (Qty. 2) (244-5003-00)		
7	Spring Washer (17/32" ID X 3/4" X 1")	1	269-5002-00
8	Coil Support Bracket	1	535-7356-00
	Item 8 is secured to Item 1 by: #8-32 X 3/8" HWH Swage (Ser.) Zc. (Qty. 2) (237-5975-00)		
9	Coil, 23-1100 (ORANGE) (Right)	1	090-5030-00T
	Coil has a Diode (1N4004) (112-5003-00) positioned @ top (above lugs next to windings).		
10	Coil Sleeve	1	545-5388-00
11	Deflector Pad (Bumper)	1	545-5428-00
12	Flipper Plunger & Link Sub-Assy.	1	515-6304-03
	For Individual Items use : Flipper Plunger (**530-5349-01**) **and** Plunger "Flipper" Link (**545-5611-01**) **and is secured to the Plunger by:** Bushing, .16" ø ID X .281" ø OD X .187" (Qty. 1) (530-5532-00) **and** Spiral Pin ø 5/32" X 3/4" Lg. (Qty. 1) (251-5015-02)		

Nr.	FLIPPER (RIGHT) PARTS	QTY.	SPI PART Nr.
13	Crank Bar	1	530-5070-02
	Item 13 requires: Bushing, .192" ø ID X .312" ø OD X .195" (Qty. 1) (530-5139-00)		
14®	Switch Actuator (**RIGHT**) Sub-Assy.	1	515-7257-**00**
	For Individual Items use : Actuator & Spring Bracket (**RIGHT**) (**535-9038-00**) **and** ® Switch Actuator (White Plastic) (**545-5612-00**) **and is secured to the Bracket by:** Rivet, 1/8" ø X 1/4" Lg. (Qty. 1) (249-5003-00)		
15	Set Screw: #10-32 X 3/4" Socket Hd.	2	237-6144-00
	Item 15 requires: #10-32 Nylon Stop Nut (Qty. 1 *Flipper Link Side Only*) (240-5203-00) **and** #10 Split Lock Washer (244-5003-00) ***Tool Required for Item 15:*** **5/32" or 4mm Allen Wrench**		

Flipper Rebuild Parts for Easier Installation, $ave $:

FRP1	**Flipper Base Plate Kit (RIGHT)** *Includes Item 1 pre-threaded, with the Securing Hardware for Items 2, 3, 6 & 8.*	515-6617-**00**
FRP2	**Plunger, Link & Crank (RIGHT) Assy.** *Includes above Items 12, 13, 14 and 15 and is pre-assembled.*	515-7203-**00**
FRP3	**Flipper (RIGHT) Rebuild Kit** *Same as **FRP2**, but also includes above Items 6 & 10.*	500-6307-**00**

ASSOCIATED PARTS **ARE NOT INCLUDED** WITH THE ABOVE ASSEMBLY.

Nr.	ASSOCIATED PART(S)	QTY.	SPI PART Nr.
AP-A	**YELLOW** Flipper Bat (Plain) & Shaft (Non-Knurled End) Assembly	1	515-5133-06-06
AP-B	Large Flipper **RED** Rubber Ring	1	545-5277-22

** To Order the Flipper (Right) Rebuild Kit ask for Part Nr.: 500-6307-00 (includes Items 6, 10, 12, 13, 14 & 15)*

The differences between the Left & Right Flippers are:

Item 1, **Item 4**, ***and*** **Item 14** *(just the Bracket)*

The coils may also differ depending on the game.

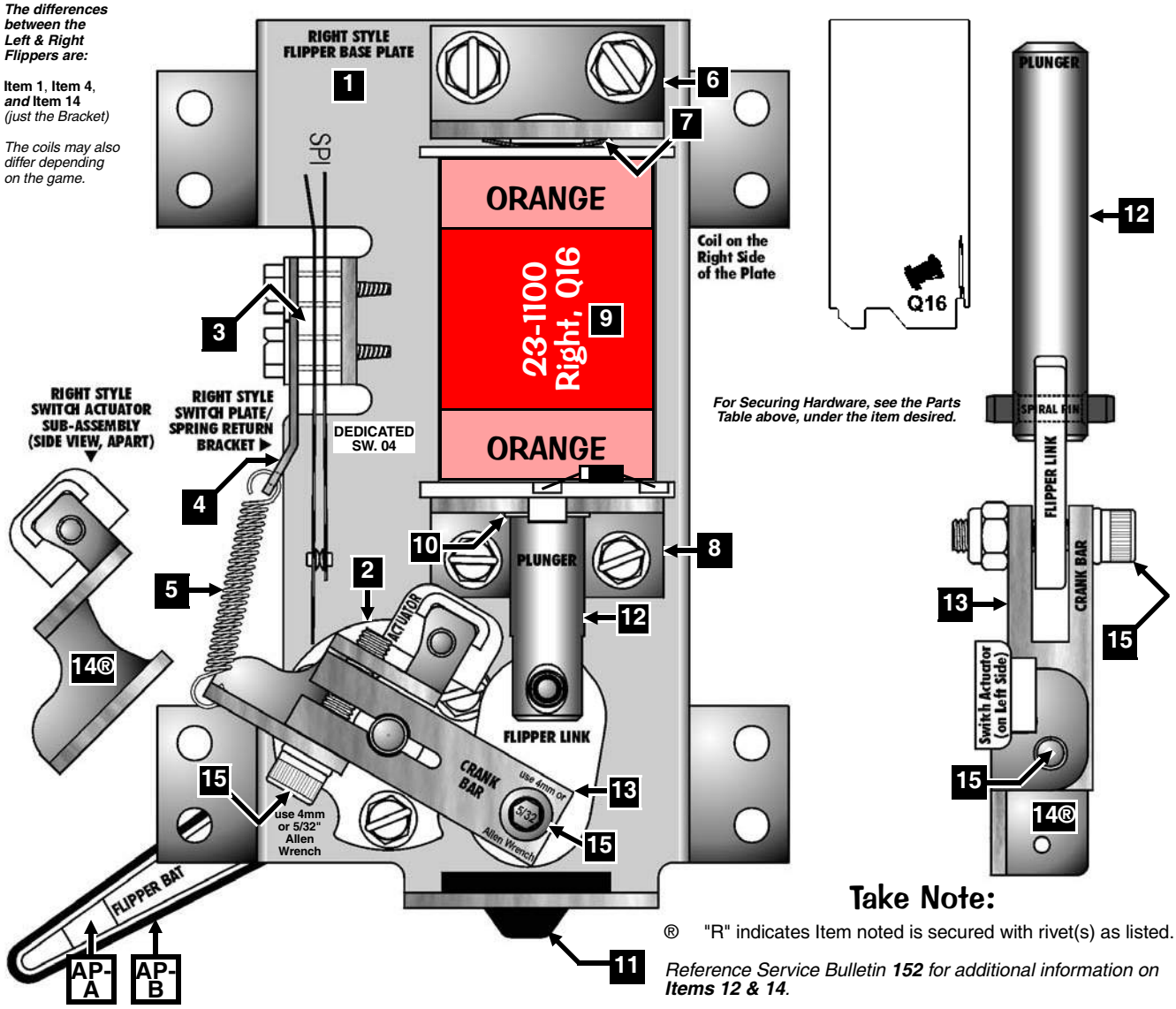

Take Note:

® "R" indicates Item noted is secured with rivet(s) as listed.

*Reference Service Bulletin **152** for additional information on **Items 12 & 14**.*

Slingshot (Left & Right) Assemblies, 500-5849-00 (Qty. 2) (Items 1-9)

Nr.	SLINGSHOT PARTS	QTY.	SPI PART Nr.
1	Slingshot Bracket Assembly	1/per	515-5339-01
	Item 1 is secured below the playfield by: #8 X 1/2" SHWH AB (Zc.) (Qty. 3) (234-5101-00)		
2	Coil Retaining Bracket	1/per	535-5203-03
	Item 2 is secured to Item 1 by: #8-32 X 3/8" PPH MS (Sems) (Qty. 2) (232-5301-00)		
3	Coil, 23-800	1/per	090-5001-00T
	Coil has a Diode (1N4004) (112-5003-00) positioned @ top (above lugs next to windings).		
4	Coil Sleeve	1/per	545-5031-00
5	Plunger & Link Assembly	1/per	515-5338-00
	For Individual Items use : Plunger 2" Lg. (**530-5025-01**), Plunger Link (**545-5293-00**) **and** Roll Pin 1/8" ø x 5/8" Lg. (**251-5008-00**) **The Plunger Link is secured to the Riveted Arm by:** Retaining Ring, 1/4" ø Shaft (Qty. 1) (270-5002-00)		
	Ordering Note: *If* **515-5338-00** *is unavailable*, order the individual part(s) actually required.		

Nr.	SLINGSHOT PARTS	QTY.	SPI PART Nr.
6	Compression (Return) Spring	1/per	266-5020-00
7	Slingshot Stack (Blade) Switch	2/per	180-5054-00
	Only **1** of the 2 Switches has a Diode (1N4004) (112-5003-00). *See Note Below on Drawing. Can be replaced with (1N4001) (112-5001-00).*		
8	Switch Body Protect Plate	2/per	535-5045-00
	Items 7 & 8 are secured to Item 1 by: #6-32 X 5/8" HWH Swage (Qty. 4) (237-5976-04)		
9®	Riveted Arm & Tip Assembly	1/per	515-5340-01
	For Individual Parts use (requires drilling out rivet & rereviting) : Arm (**515-5341-01**), Kicker Tip (**545-5216-01**) **and** Rivet, 1/8" ø x 1/4" Lg. (**249-5003-00**) **The Riv. Arm is secured to Item 1 by:** Retaining Ring, 1/4" ø Shaft (Qty. 1) (270-5002-00)		
	Ordering Note: *If* **515-5340-01** *is unavailable*, order the individual part(s) actually required.		
	Ordering Note: *If* **500-5849-00** *is unavailable*, order the individual part(s) actually required. This assembly is identical to **500-5849-01** with the exception of **Item 3**, which uses a Coil, 26-1200 (**090-5044-00T**) instead.		

Take Note:

↻ **Coil Note:** ↻ Either -00**B** *or* -00**T** can be used for coil replacements.
B/T listed is preferable for easier diode access & may differ on game.

® "R" indicates Item noted is secured with rivet(s) as listed.

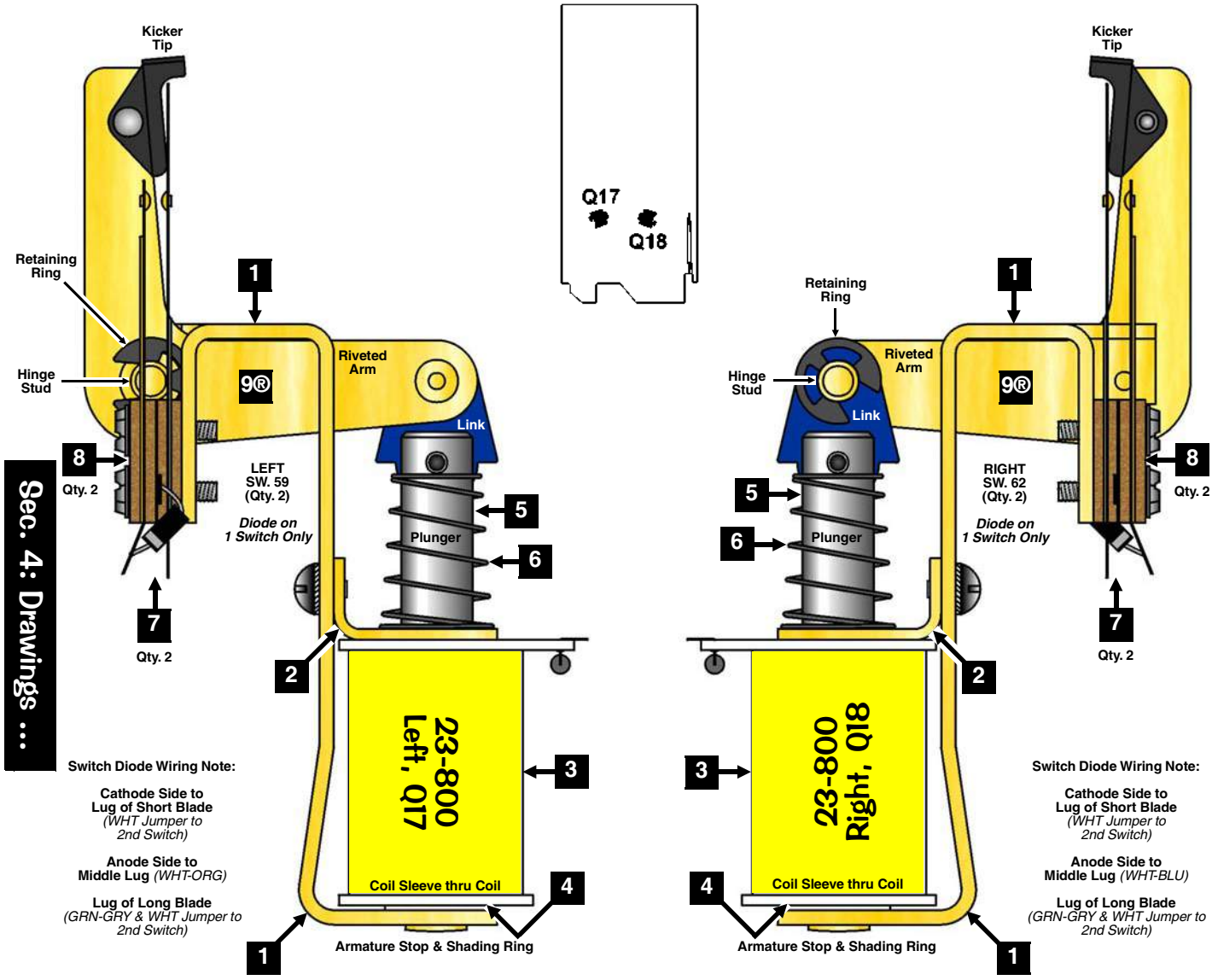

For Securing Hardware, see the Parts Table above, under the item desired.

Left Side View

Right Side View

Bumper Top, Bumper Bottom* & Bumper Switch Individual Parts Only (Items 1-18) and Associated Parts: See Parts Table Below.

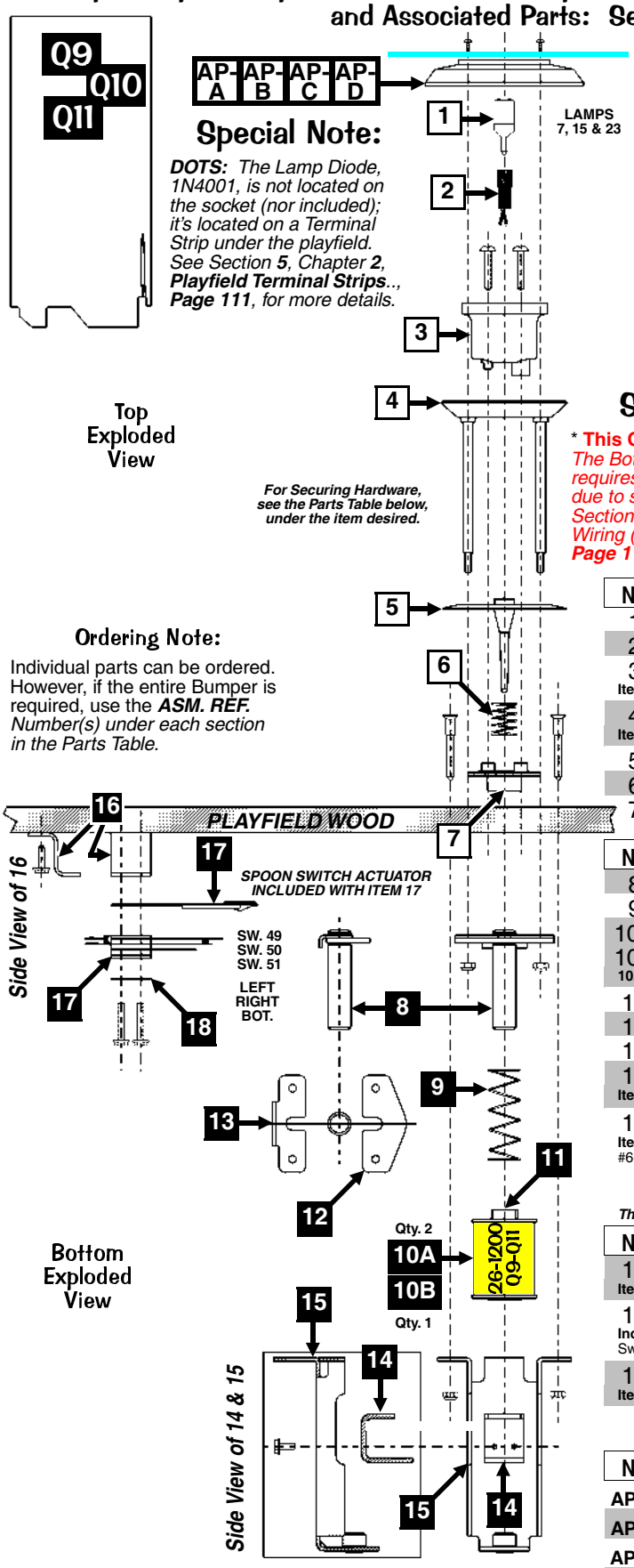

Special Note:

DOTS: *The Lamp Diode, 1N4001, is not located on the socket (nor included); it's located on a Terminal Strip under the playfield. See Section **5**, Chapter **2**, **Playfield Terminal Strips**.., **Page 111**, for more details.*

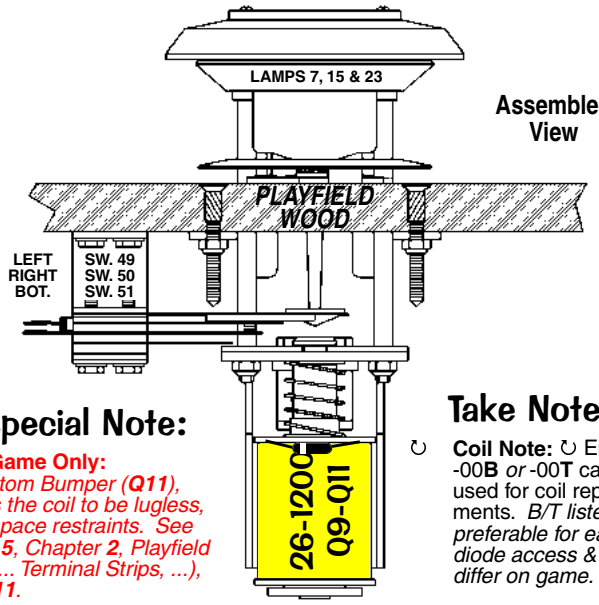

Assembled View

Special Note:

* **This Game Only:** *The Bottom Bumper (**Q11**), requires the coil to be lugless, due to space restraints. See Section **5**, Chapter **2**, Playfield Wiring (... Terminal Strips, ...), **Page 111**.*

Take Note:

↻ **Coil Note:** ↻ Either -00**B** *or* -00**T** can be used for coil replacements. *B/T listed is preferable for easier diode access & may differ on game.*

Ordering Note:

Individual parts can be ordered. However, if the entire Bumper is required, use the ***ASM. REF.*** *Number(s) under each section in the Parts Table.*

Nr.	BUMPER TOP PARTS	QTY.	SPI PART Nr.
1	LED Module (WHT) (6.3v) Wedge Base	1/per	112-5024-08
2	Wedge Base Socket	1/per	077-5206-00
3	Bumper Body	1/per	545-5197-00
	Item 3 is secured by: #5 X 7/8" PRH AB (Zinc) (Qty. 2/per) (237-5826-00)		
4	Ring Assembly	1/per	515-5085-00
	Item 4 is secured by: #6-32 Nylon Stop Nut (Qty. 2/per) (240-5005-00)		
5	Bumper Skirt	1/per	545-5607-00
6	Bumper Skirt Compression Spring	1/per	266-5048-00
7	Bumper Base	1/per	545-5195-00
	(ASM. REF. 515-6459-**01L**, Items 1-7 (Qty. **3**))		

Nr.	BUMPER BOTTOM PARTS	QTY.	SPI PART Nr.
8	Plunger	1/per	530-5348-00
9	Compression (Return) Spring	1/per	266-5047-00
10A	Coil, 26-1200 (**Q9** & **Q10**)	2	090-5044-00T
10B	Coil, 26-1200 *(lugless coil)* (**Q11**)	1*	090-5044-**NL**
	10A Coil has Diode (1N4004) (112-5003-00) positioned @ top (above lugs next to windings).		
11	Coil Sleeve	1/per	545-5031-00
12	Fiber Yoke	1/per	545-5609-00
13	Metal Yoke	1/per	535-7346-00
14	Metal Yoke Stop	1/per	535-7347-00
	Item 14 is secured by: #6-32 X 1/4" HWH Swage (Serr.) Zinc (Qty. 2/per) (237-5976-01)		
15	Coil Bracket Welded Assembly	1/per	515-5939-00
	Item 15 is secured by: #6-32 X 1-3/16" Spiral Fin Shank (Qty. 3/per) (237-5957-00) **and** #6-32 Nylon Stop Nut (Qty. 3/per) (240-5005-00)		
	(ASM. REF. 515-6459-04, Items 8, 9, **10A** & 11-15 Only (Qty. 2)); * (ASM. REF. 515-6459-**04-NL**, Items 8, 9, **10B** & 11-15 (Qty. 1))		

The Top & Bottom Assemblies are secured together by hardware included in assemblies.

Nr.	BUMPER SWITCH PARTS	QTY.	SPI PART Nr.
16	Switch Bracket	1/per	535-7342-00
	Item 16 is secured by: #8 X 1/2" HWH AB (Zinc) (Qty. 2/per) (234-5101-00)		
17	Bumper Stack (Blade) Switch Assy.	1/per	180-5015-04
	Included with Item 17 : Spoon Switch Actuator (**545-5610-02**). Switch has a Diode (1N4004) (112-5003-00). *Can be replaced with (1N4001) (112-5001-00).*		
18	Switch Body Protect Plate	1/per	535-7344-00
	Items 17 & 18 are secured by: #6-32 X 3/4" HWH Sw. (Serr) Zc. (Qty. 2/per) (237-5976-05)		
	(ASM. REF. 515-6459-09, Items 16-18 (Qty. 3))		

ASSOCIATED PARTS **ARE NOT INCLUDED** WITH THE ABOVE ASSEMBLIES.

Nr.	ASSOCIATED PART(S)	QTY.	SPI PART Nr.
AP-A	Bumper (Pop) Cap (Red) Left	1	550-5057-02
AP-B	Bumper (Pop) Cap (Clear) Right	1	550-5057-01
AP-C	***Modified*** Bumper Cap (Blue) Bottom	1	550-5080-05
AP-D	***Kit:* Plastics** *(includes -24 & -25)*	1	803-5000-86

Item AP-A, -B & -C are secured by: #4 X 3/4" PRH (Zinc) T-25 (Qty. 2/per) (237-5873-00)
Note: *Plastics -24 on AP-A (Red) and -25 on AP-C (Blue) use the same securing hardware.*

Item AP-D Note: *Individual Plastics (830-6035-XX) are not available individually, ordering ▶ of kit is required. For all pieces, see **Playfield Top - Plastics (Screened & Clear) Kit, Decals & Mylar Kits**, Page **69**.*

Hot Dog Sign (Above Playfield) Individual Parts Only (Items 1-6)

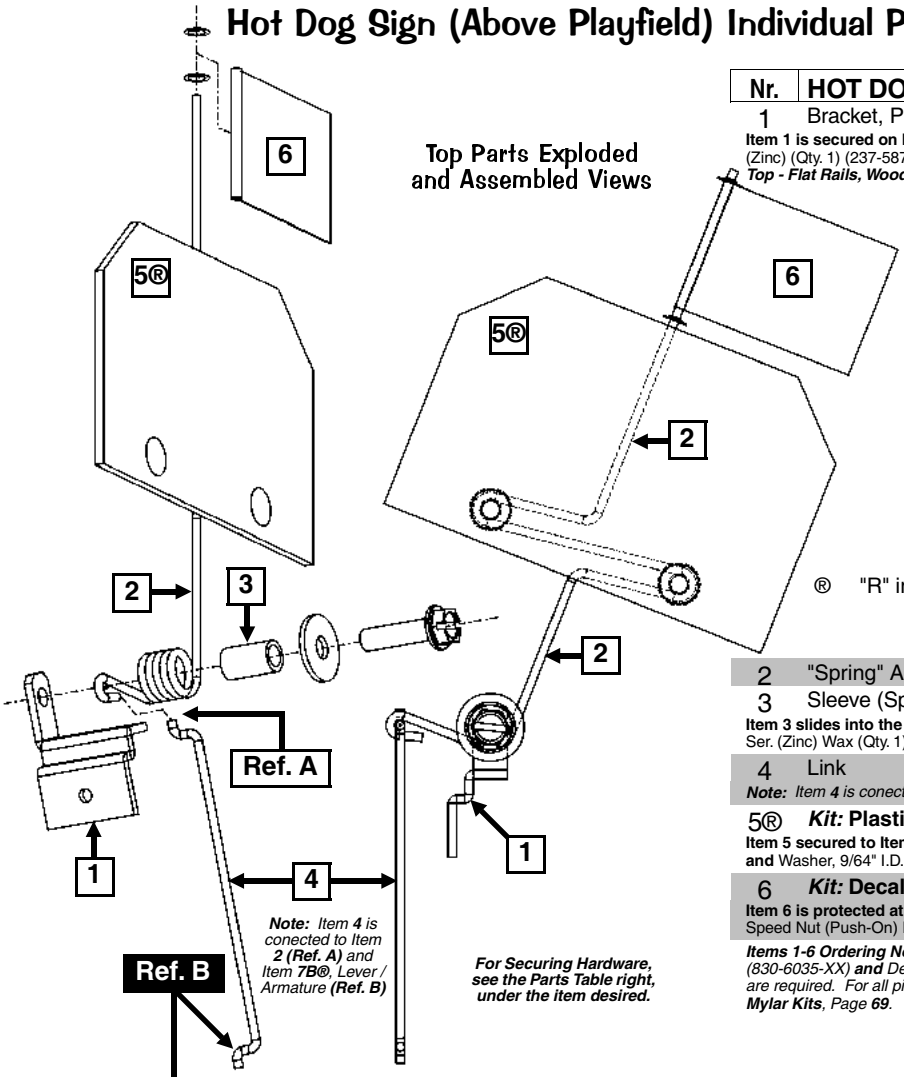

Nr.	HOT DOG TOP PARTS	QTY.	SPI PART Nr.
1	Bracket, Pivot	1	535-9640-00
	Item 1 is secured on Flat Rail #12 (535-9632-00) by: #6-32 X 3/8" PFH MS 82° Undercut (Zinc) (Qty. 1) (237-5871-00) *For Flat Rails (with Part Numbers) and locations, see **Playfield Top - Flat Rails, Wood Rails, Ball Guides & Wire Forms**, (Section **4**, Chapter **1**) Page **68**.*		
2	"Spring" Arm	1	535-9642-00
3	Sleeve (Spacer)	1	530-5706-00
	Item 3 slides into the "Spring" portion of Item 2 and is secured by: #8-32 X 5/8" SHWH Ser. (Zinc) Wax (Qty. 1) (237-5975-03) and #8 Washer (Qty. 1) (242-5005-00)		
4	Link	1	535-9643-00
	Note:** Item **4** is conected to Item **2 (Ref. A)** and Item **7B®**, Lever / Armature **(Ref. B)		
5®	***Kit:* Plastics** *(includes -09)*	1	803-5000-86
	Item 5 secured to Item 2 by: Rivet, 1/8" ø X 3/16" Long (Black Zinc) (Qty. 2) (249-5001-01) **and** Washer, 9/64" I.D. X 5/16" O.D. X 1/32" Thick (Qty. 2) (242-5017-00)		
6	***Kit:* Decals** *(includes -36)*	1	802-5000-86
	Item 6 is protected at the folded ends wrapped around Item 2 by: Speed Nut (Push-On) Fastener Type S10271 (Qty. 2) (240-5406-00)		

Items 1-6 Ordering Note: *Cannot order parts assembled because Individual Plastics (830-6035-XX) **and** Decals (820-6371-XX) are not available individually, ordering of the kits are required. For all pieces, see **Playfield Top - Plastics (Screened & Clear) Kit, Decals & Mylar Kits**, Page **69**.*

(ASM. REF. 515-7432-00, Items 1-6)
(ASM. REF. 515-7438-00, Items 2 & 5)

Take Note:

® "R" indicates Item noted is secured with rivet(s) as listed.

Hot Dog Drive Assembly (Below Playfield), 500-6845-00 (Item 7)

(Item 7 includes 7A, 7B®, 7C which cannot be ordered separately, 7D & 7E)

Nr.	HOT DOG BOTTOM PARTS	QTY.	SPI PART Nr.
7	Hot Dog Drive Asm. ***(incl. Items 7A-7E)***	1	500-6845-00
	Item 7 is secured below the playfield by: #8 X 1/2" SHWH AB (Zc.) (Qty. 2) (234-5101-00) ***Ordering Note:*** *Individual Bracket Parts (Items **7A**, **7B®** & **7C**) cannot be ordered separately. The part numbers shown below are for reference only.*		
	Reference Only: ***7A*** *Overall Mounting Bracket (Ref. 535-9641-00),* ***7B®*** *Lever / Armature Riveted Assembly (Ref. 515-7429-00) and* ***7C*** *Mini-Coil Frame (Ref. 535-6198-00)*		
7D	Mini-Coil, 32-1800	1	090-5031-00
	Item 7D is secured to 7A & 7C by: #8 X 3/8" SHWH Ser. (Zinc) Wax (Qty. 1) (237-5975-00)		
7E	Spring (Actuator)	1	265-5024-00

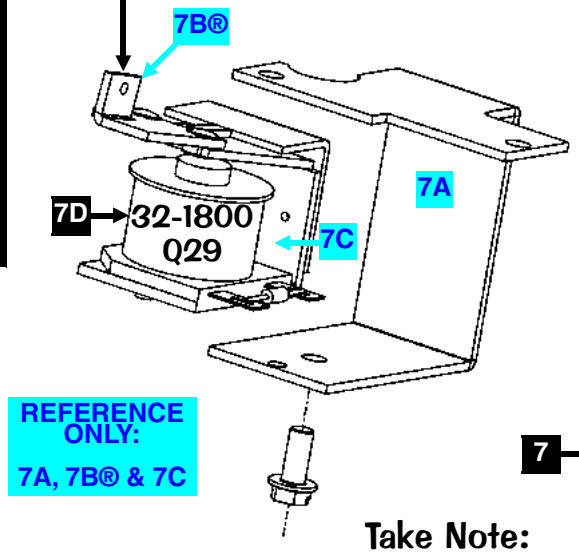

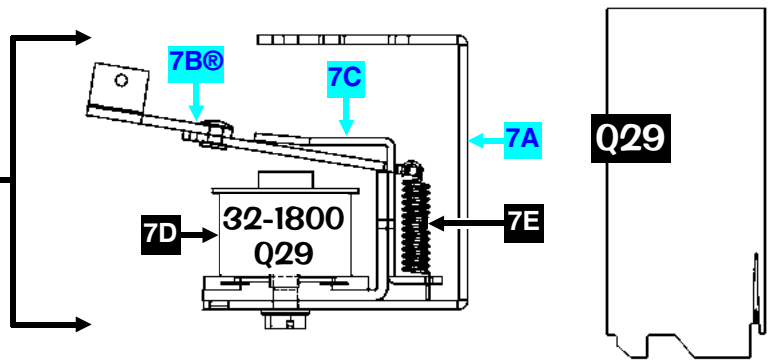

For Securing Hardware, see the Parts Table above, under the item desired.

Take Note:

® "R" indicates Item noted is secured with rivets.

2-Post Ball Diverter Assembly, 500-6837-00 (Items 1-9) and Associated Switch Parts: See Parts Table Below.

Nr.	2-POST DIVERTER PARTS	QTY.	SPI PART Nr.
1	Main Housing, 2-Post Mntg. Bracket	1	535-9503-00
	Item 1 is secured below the playfield by: #8 X 1/2" SHWH AB (Zc.) (Qty. 4) (234-5101-00)		
2	Transceiver OPTO PCB Assembly	1	500-6775-00
	Item 2 is secured to Item 1 by: #6 X 5/16" PPH (Zinc) Type-25 (Qty. 2) (237-5880-01)		
3	Coil Retaining Bracket	2	535-5203-03
	Item 3 is secured to Item 1 by: #8-32 X 1/4" SHWH Sw. (Sr.) Zc. (Qty. 2/per) (237-5975-04)		
4	Spring Washer (17/32" ID X 3/4" X 1")	1	269-5002-00
5	Coil, 26-1200	2	090-5044-00T
	Each Coil has a Diode (1N4004) (112-5003-00) pos. @ top (above lugs next to windings).		
6	Coil Sleeve	2	545-5411-00
7	Steel & Offset Extension Plunger Asm	2	515-7444-00
	Item 7 is secured to Item 1 by: Retaining Ring, 7/16" ø Shaft (Qty. 1/per) (270-5005-00)		
8	Compression (Return) Spring	2	266-5020-00
9	Adjust. Scr. 1/4-20 X 1" SS PPHD	2	237-6164-00
	Item 9 is secured by: 1/4-20 Wing Nut (Qty. 1/per) (240-5302-00) + Loctite* (000-0629-00)		

***Loctite 38050-380 Black Max 1oz.**
Ordering Note: *If* **500-6837-00** *is unavailable*, order the individual part(s) actually required.

ASSOCIATED SWITCH PARTS **ARE NOT INCLUDED** WITH THE ASSEMBLY.

Nr.	ASSOC. SWITCH PART(S)	QTY.	SPI PART Nr.
AP-A	Transceiver OPTO PCB Assembly	1	500-6775-00
	Item AP-A is secured on Flat Rail #6 (535-9614-00) by: Fiche Paper (Insulator) (Qty. 1) (545-6145-00) **and** #6 X 5/16" PPH (Zinc) Type-25 (Qty. 2) (237-5880-01)		
AP-B	Switch Mounting Bracket, 2-Switch	1	535-9630-00
	Item AP-B is secured below the P/F by: #8 X 1/2" SHWH AB (Zc.) (Qty. 2) (234-5101-00)		
AP-C	Micro Switch, Straight Wire Actuator	1	180-5178-00
AP-D	Micro Sw., Med. Bend in Wire Act'tr.	1	180-5179-00
AP-E	Switch Body Protect Plate	1/per	535-6539-00
	Item AP-E is secured by: #2-56 X 1/2" #4 HD TR3 (Qty. 2/per) (237-5937-02)		

Take Note:

For a break-down of parts and wiring configuration of Items **2** and AP-A, **Transceiver OPTO PCB** (**500-6775-00**) and associated PCBs *Not Shown* (Playfield OPTO Trans./Rec. Amplifier Board and Playfield X3 Triple Auxillary Board) see Section ***5**, Chapter **4**, **Printed Circuit Boards** (**YELLOW PAGES**), Pages **148-153**.*

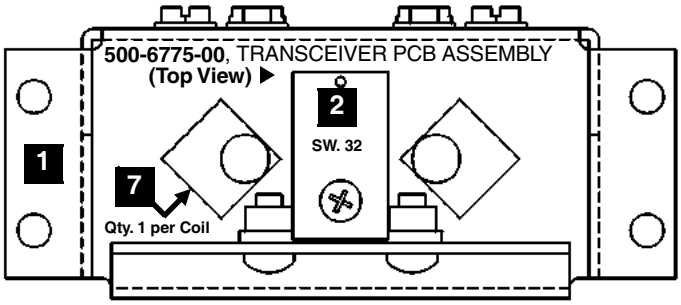

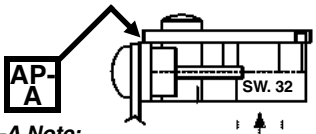

500-6775-00, TRANSCEIVER PCB ASSEMBLY ◀ **(Side View)**

Item AP-A Note: *Qty. 1 located on Flat Rail #6 above the Playfield. Qty. 1 on Item 1 below the Playfield.*

601-5023-12 12" SPKR WIRE with **045-5020-02** 2-Pin .1" CONNECTOR (***Not Shown for clarity)***

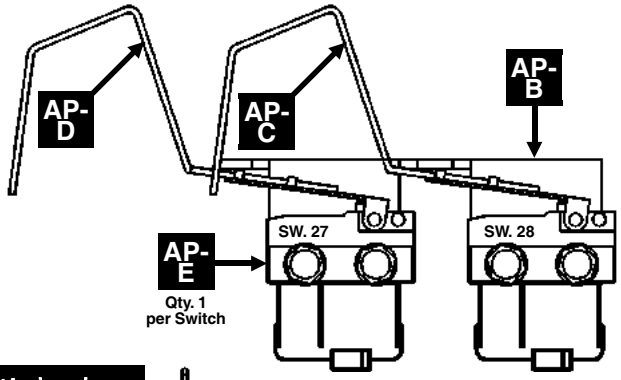

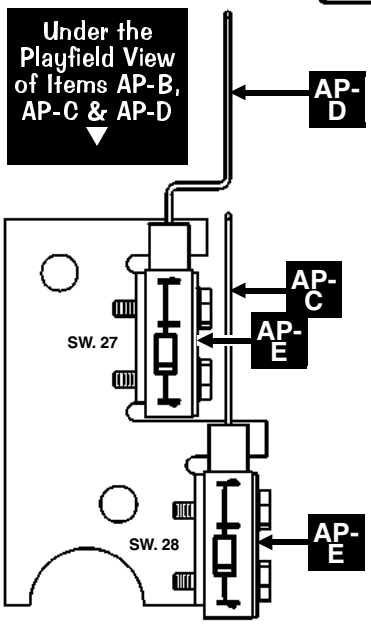

For Securing Hardware, see the Parts Table above, under the item desired.

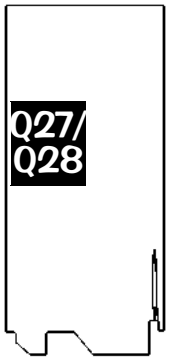

If reinstalled, adjust to correct drop height and add Loctite* *(see Parts Table, Item 9).*

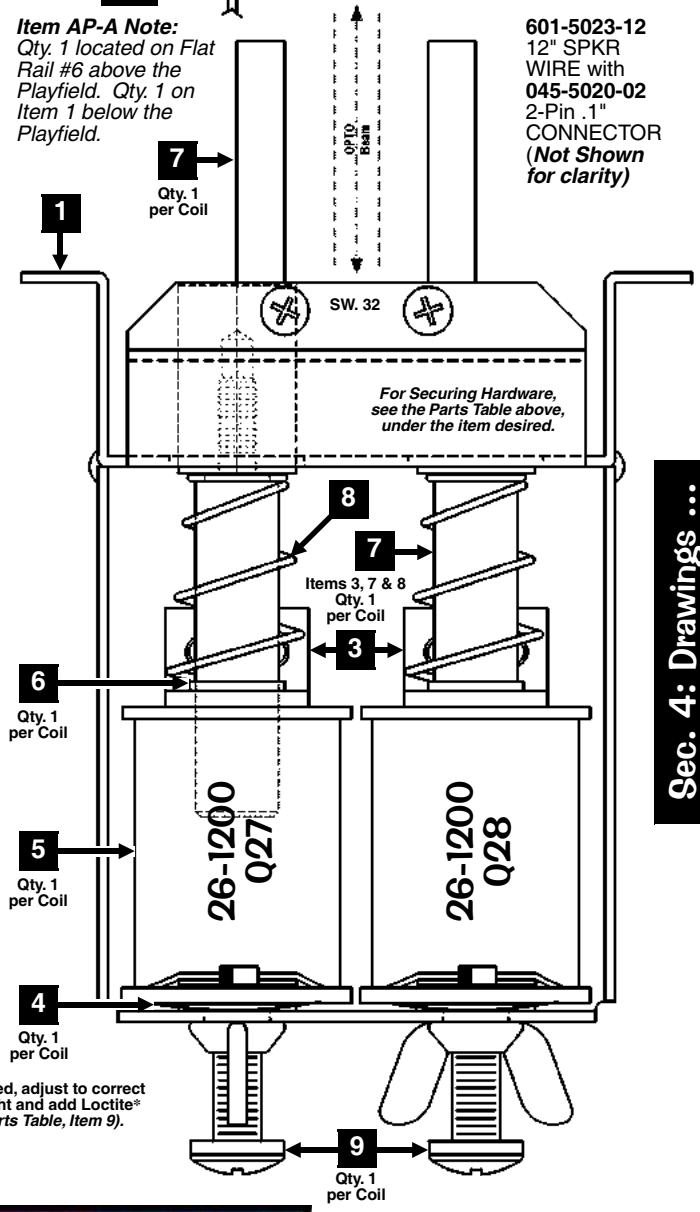

Sec. 4: Drawings ...

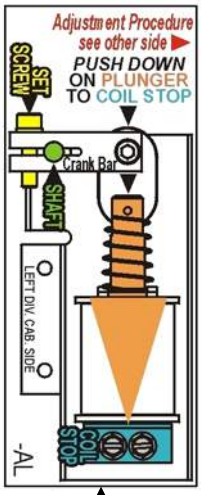

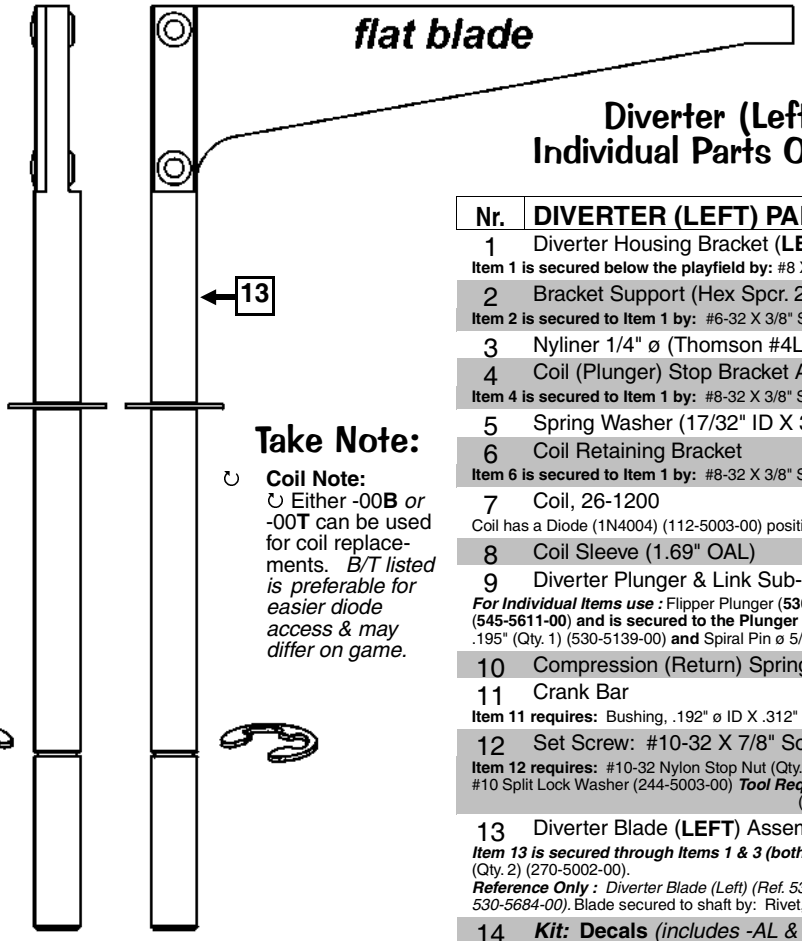

Take Note:

Coil Note:
Either -00**B** *or* -00**T** can be used for coil replacements. *B/T listed is preferable for easier diode access & may differ on game.*

Diverter (Left) Assembly Individual Parts Only (Items 1-14)

Nr.	DIVERTER (LEFT) PARTS	QTY.	SPI PART Nr.
1	Diverter Housing Bracket (**LEFT**)	1	535-9520-**00**
	Item 1 is secured below the playfield by: #8 X 1/2" SHWH AB (Zc.) (Qty. 3) (234-5101-00)		
2	Bracket Support (Hex Spcr. 2" X 1/4")	1	254-5008-07
	Item 2 is secured to Item 1 by: #6-32 X 3/8" SHWH 23 Zinc (Qty. 2) (237-5891-00)		
3	Nyliner 1/4" ø (Thomson #4L1-FF)	2	545-5423-00
4	Coil (Plunger) Stop Bracket Asm.	1	515-7422-01
	Item 4 is secured to Item 1 by: #8-32 X 3/8" SHWH Swg. (Ser.) Zc. (Qty. 2) (237-5975-00)		
5	Spring Washer (17/32" ID X 3/4" X 1")	1	269-5002-00
6	Coil Retaining Bracket	1	535-5203-03
	Item 6 is secured to Item 1 by: #8-32 X 3/8" SHWH Swg. (Ser.) Zc. (Qty. 2) (237-5975-00)		
7	Coil, 26-1200	1	090-5044-00T
	Coil has a Diode (1N4004) (112-5003-00) positioned @ top (above lugs next to windings).		
8	Coil Sleeve (1.69" OAL)	1	545-5411-00
9	Diverter Plunger & Link Sub-Assy.	1	515-6304-02
	For Individual Items use : Flipper Plunger (**530-5349-01**) **and** Plunger "Flipper" Link (**545-5611-00**) **and is secured to the Plunger by:** Bushing, .192" ø ID X .312" ø OD X .195" (Qty. 1) (530-5139-00) **and** Spiral Pin ø 5/32" X 3/4" Lg. (Qty. 1) (251-5015-02)		
10	Compression (Return) Spring	1	266-5020-00
11	Crank Bar	1	530-5070-02
	Item 11 requires: Bushing, .192" ø ID X .312" ø OD X .195" (Qty. 1) (530-5139-00)		
12	Set Screw: #10-32 X 7/8" Socket Hd.	2	237-5966-00
	Item 12 requires: #10-32 Nylon Stop Nut (Qty. 1 *Link Side Only*) (240-5203-00) **and** #10 Split Lock Washer (244-5003-00) ***Tool Required for Item 15:*** **5/32" or 4mm Allen Wrench** (ASM. REF. 500-6842-00, Items 1-12 Only)		
13	Diverter Blade (**LEFT**) Assembly	1	515-74**30**-00
	Item 13 is secured through Items 1 & 3 (both sides) by: Retaining Ring, 1/4" ø Shaft (Qty. 2) (270-5002-00). ***Reference Only :*** *Diverter Blade (Left) (Ref. 535-9521-00) and Diverter Shaft (Reference 530-5684-00).* Blade secured to shaft by: Rivet, 1/8" ø by 1/4" Long (Qty. 2) (249-5003-00)		
14	***Kit:*** **Decals** *(includes -AL & -BL)*	1	802-5000-86
	Note: *Individual Decals are not available individually, ordering of kit is required. For all pieces, see* ***Playfield Top - Plastics (Screened & Clear) Kit, Decals & Mylar Kits****, Page* ***69****.*		

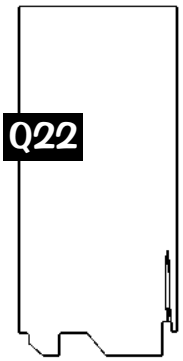

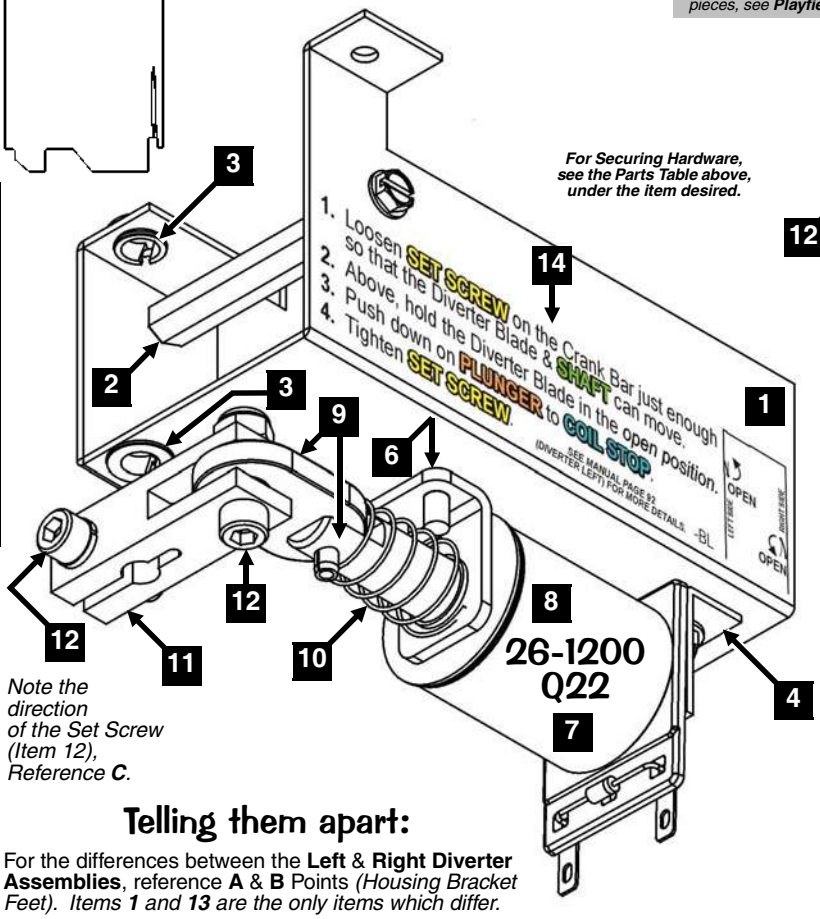

For Securing Hardware, see the Parts Table above, under the item desired.

Note the direction of the Set Screw (Item 12), Reference ***C****.*

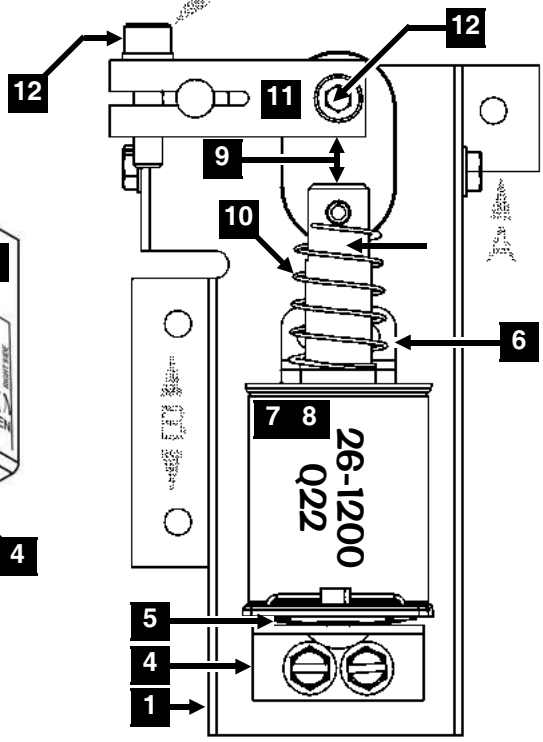

Note the direction of the Set Screw (Item 12), Reference ***C****.*

Telling them apart:

For the differences between the **Left** & **Right Diverter Assemblies**, reference **A** & **B** Points *(Housing Bracket Feet). Items* ***1*** *and* ***13*** *are the only items which differ.*

▼ DISASSEMBLY FOR REPAIR PROCEDURE PRECEDES THIS PAGE (92-93A) ▼

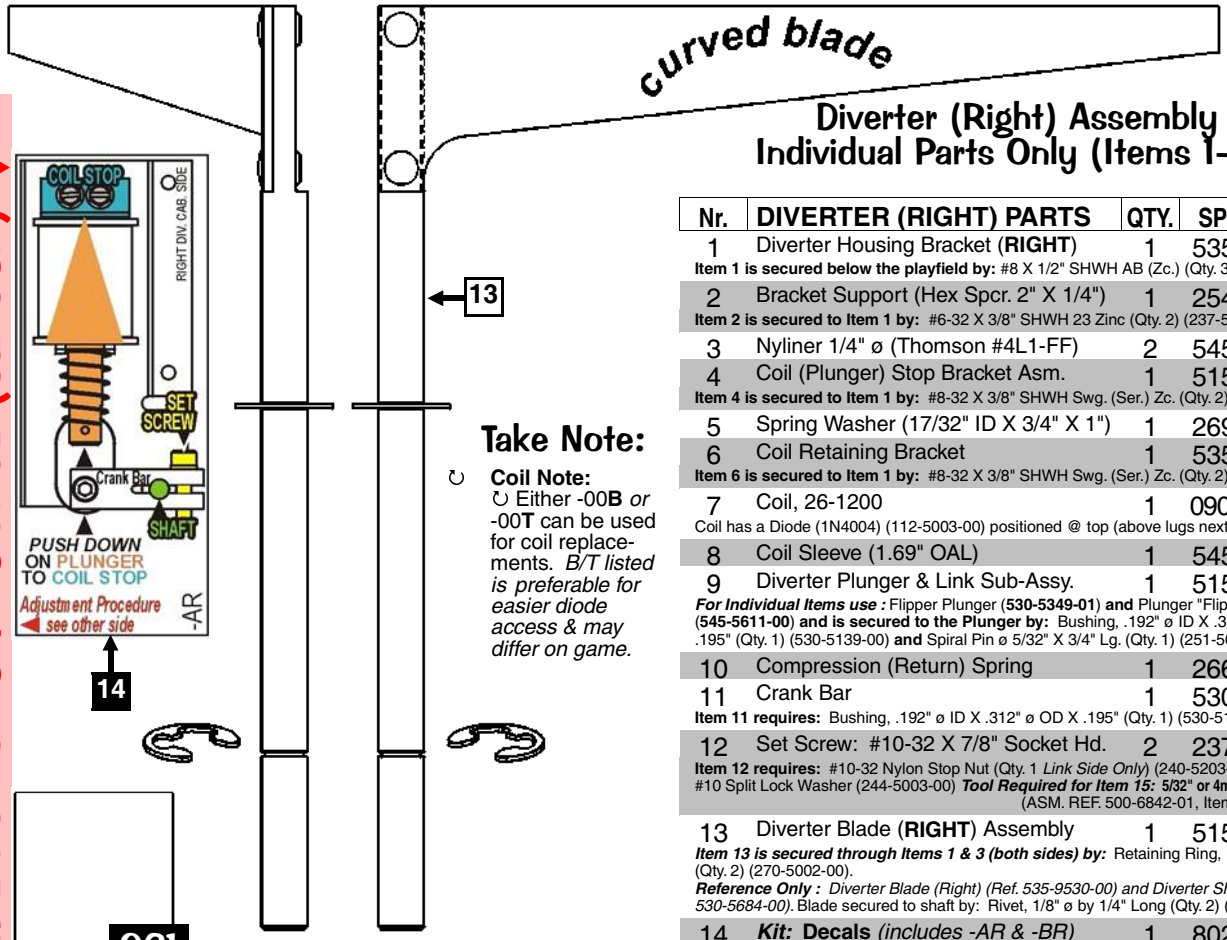

Diverter (Right) Assembly Individual Parts Only (Items 1-14)

Nr.	DIVERTER (RIGHT) PARTS	QTY.	SPI PART Nr.
1	Diverter Housing Bracket (**RIGHT**)	1	535-9520-**01**
	Item 1 is secured below the playfield by: #8 X 1/2" SHWH AB (Zc.) (Qty. 3) (234-5101-00)		
2	Bracket Support (Hex Spcr. 2" X 1/4")	1	254-5008-07
	Item 2 is secured to Item 1 by: #6-32 X 3/8" SHWH 23 Zinc (Qty. 2) (237-5891-00)		
3	Nyliner 1/4" ø (Thomson #4L1-FF)	2	545-5423-00
4	Coil (Plunger) Stop Bracket Asm.	1	515-7422-01
	Item 4 is secured to Item 1 by: #8-32 X 3/8" SHWH Swg. (Ser.) Zc. (Qty. 2) (237-5975-00)		
5	Spring Washer (17/32" ID X 3/4" X 1")	1	269-5002-00
6	Coil Retaining Bracket	1	535-5203-03
	Item 6 is secured to Item 1 by: #8-32 X 3/8" SHWH Swg. (Ser.) Zc. (Qty. 2) (237-5975-00)		
7	Coil, 26-1200	1	090-5044-00T
	Coil has a Diode (1N4004) (112-5003-00) positioned @ top (above lugs next to windings).		
8	Coil Sleeve (1.69" OAL)	1	545-5411-00
9	Diverter Plunger & Link Sub-Assy.	1	515-6304-02
	For Individual Items use : Flipper Plunger (**530-5349-01**) **and** Plunger "Flipper" Link (**545-5611-00**) **and is secured to the Plunger by:** Bushing, .192" ø ID X .312" ø OD X .195" (Qty. 1) (530-5139-00) **and** Spiral Pin ø 5/32" X 3/4" Lg. (Qty. 1) (251-5015-02)		
10	Compression (Return) Spring	1	266-5020-00
11	Crank Bar	1	530-5070-02
	Item 11 requires: Bushing, .192" ø ID X .312" ø OD X .195" (Qty. 1) (530-5139-00)		
12	Set Screw: #10-32 X 7/8" Socket Hd.	2	237-5966-00
	Item 12 requires: #10-32 Nylon Stop Nut (Qty. 1 *Link Side Only*) (240-5203-00) **and** #10 Split Lock Washer (244-5003-00) ***Tool Required for Item 15:*** **5/32" or 4mm Allen Wrench** (ASM. REF. 500-6842-01, Items 1-12 Only)		
13	Diverter Blade (**RIGHT**) Assembly	1	515-74**31**-00
	Item 13 is secured through Items 1 & 3 (both sides) by: Retaining Ring, 1/4" ø Shaft (Qty. 2) (270-5002-00). ***Reference Only :*** *Diverter Blade (Right) (Ref. 535-9530-00) and Diverter Shaft (Reference 530-5684-00).* Blade secured to shaft by: Rivet, 1/8" ø by 1/4" Long (Qty. 2) (249-5003-00)		
14	***Kit:*** **Decals** *(includes -AR & -BR)*	1	802-5000-86
	Note: *Individual Decals are not available individually, ordering of kit is required. For all pieces, see* ***Playfield Top - Plastics (Screened & Clear) Kit, Decals & Mylar Kits****, Page* ***69****.*		

Take Note:

↻ **Coil Note:** ↻ Either -00**B** *or* -00**T** can be used for coil replacements. *B/T listed is preferable for easier diode access & may differ on game.*

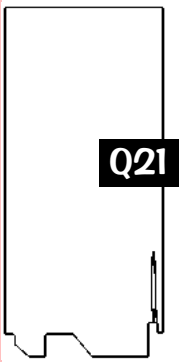

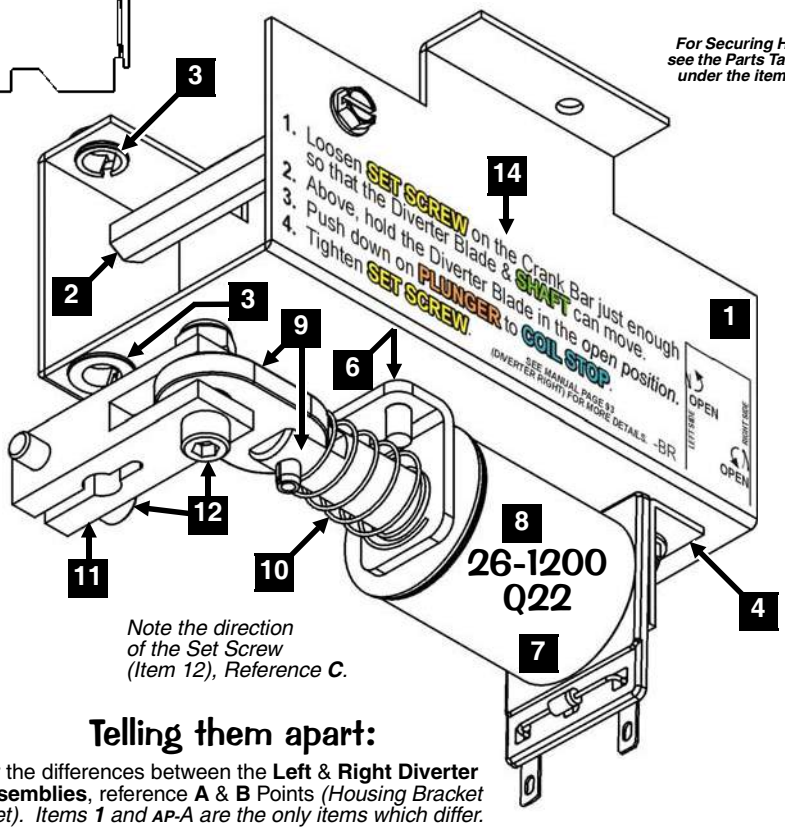

For Securing Hardware, see the Parts Table above, under the item desired.

*Note the direction of the Set Screw (Item 12), Reference **C** ▼.*

*Note the direction of the Set Screw (Item 12), Reference **C**.*

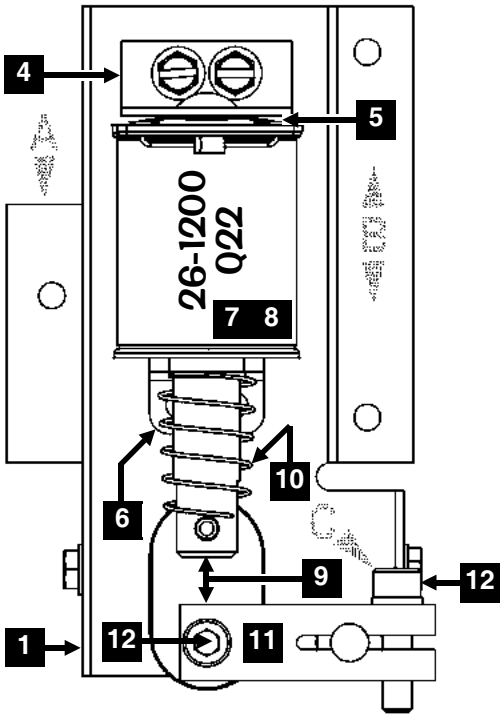

Telling them apart:

For the differences between the **Left** & **Right Diverter Assemblies**, reference **A** & **B** Points *(Housing Bracket Feet). Items **1** and **AP**-A are the only items which differ.*

◀ Reference Pages 92-93 For Items & Part Numbers

Diverters (Left & Right) and Blades Disassembly For Repair

Technicians Remember the Basics: *All Service should be done by qualified personnel.* ***ALWAYS REMOVE POWER BEFORE SERVICING****. Service assemblies which are below the playfield, with the playfield in its' most upright position (leaning against the Backbox). Raise it carefully! Ensure the bottom edge (back) of the playfield is still resting on the Cabinet Side Support Rails and is forward enough to allow the Playfield to lean against the backbox at an angle so it does not fall forward.* ***When lowering, rest on the support brackets first, then continue to place in cabinet.*** *Ensure playfield is pushed forward 'til the stop is felt, before lowering to ensure the Trough Popper Mechanism clears the Coin Mechanisms on the Coin Door. Re-assembly is the reverse of disassembly (removal). Keep track of securing hardware (which are referenced under the items in the Parts Table) Use* ***Loctite Blue 242*** *on the threads all screws to ensure the screws will not loosen in play.*

When in doubt, give us a call!

DIVERTER BLADE (FLAG) REMOVAL:

1. Loosen the SET SCREW that holds the DIVERTER SHAFT & BLADE to the Crank Bar.
2. There are 2 Retaining Rings (clips) that hold the shaft at its correct depth to the playfield. One is located above the bracket housing, the other is located just under where the enters the bracket (Ref. Item 3 on Pages 92 or 93). Using a long nose pliers remove both of these rings from the shaft.
3. Remove the DIVERTER SHAFT & BLADE from the top of the playfield.

DIVETER SHAFT & BLADE ADJUSTMENT:

1. Put a DIVERTER SHAFT & BLADE back into the bracket housing.
2. Reinstall both Retaing Rings onto the shaft.

>> CAUTION! *Failure to install both of these rings (clips) could cause the mechanism to bind.* **<< CAUTION!**

3. Place the shaft end thru the Crank Bar and hand tighten the SET SCREW just enough so the Diverter Blade & SHAFT can move..
4. Above the playfield, hold the Diverter Blade in its' most **OPEN** position against the ***outside rail of the game***. Under the playfield, push down on the plunger ALL THE WAY INTO THE COIL (AGAINST THE COIL STOP). *Only then tighten* the set screw onto the shaft end (through the Crank Bar). This procedure ensures correct depth of the plunger into the coil in the unenergized position. Check for smooth operation.

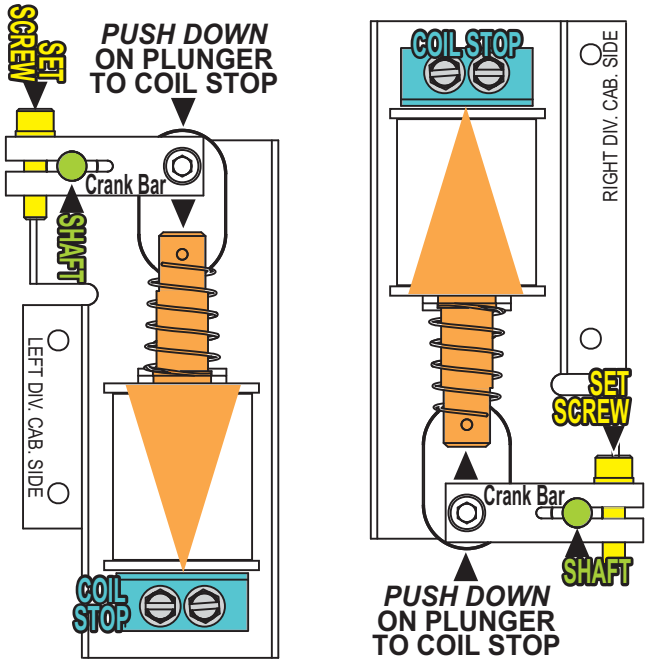

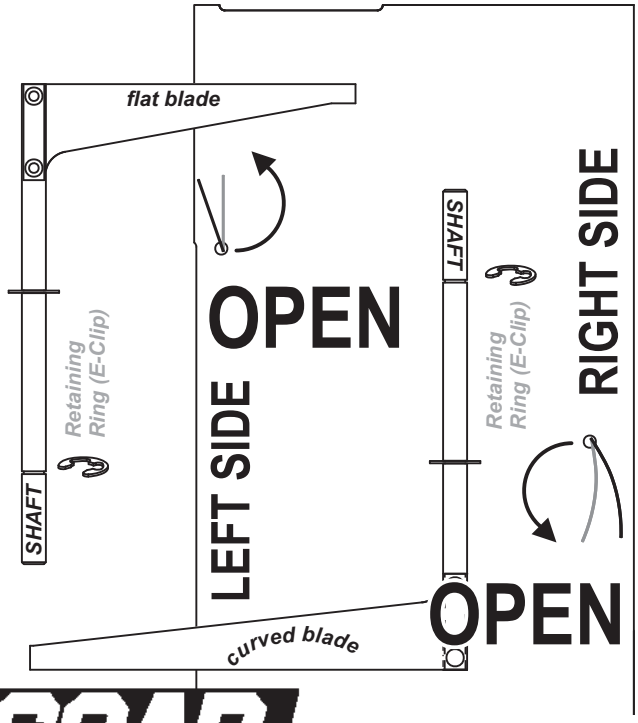

1- & 2-Coil (Ball Accelerators) Magnets Disassembly For Repair

Technicians Remember the Basics: *All Service should be done by qualified personnel.* ***ALWAYS REMOVE POWER BEFORE SERVICING****. Service assemblies which are below the playfield, with the playfield in its' most upright position (leaning against the Backbox). Raise it carefully! Ensure the bottom edge (back) of the playfield is still resting on the Cabinet Side Support Rails and is forward enough to allow the Playfield to lean against the backbox at an angle so it does not fall forward.* ***When lowering, rest on the support brackets first, then continue to place in cabinet.*** *Ensure playfield is pushed forward 'til the stop is felt, before lowering to ensure the Trough Popper Mechanism clears the Coin Mechanisms on the Coin Door. Re-assembly is the reverse of disassembly (removal). Keep track of securing hardware (which are referenced under the items in the Parts Table) Use* ***Loctite Blue 242*** *on the threads all screws to ensure the screws will not loosen in play.*

When in doubt, give us a call!

RACE TRACK MAGNET COIL REMOVAL

Note 1: *The race Track OPTO's can be serviced without removing the entire Magnet Assembly.*
Note 2: *Most magnet problems can be traced to Switch/OPTO problems, Fuse (F20) problem, or x3 (Triple) Driver Board problem. Always suspect these systems before replacing a driver coil (refer to Section 5). The coils are further protected by integral thermal fuses.*

*The magnet (accelerator) coils can be quick tested to see if it is firing by placing a magnetic item such as a screwdriver next to the coil. The screwdriver will move slightly if the coil is firing. Read NASCAR® Diagnostics (Portals™), Section **3**, Chapter **2**, Page **27**. Run "Track" Test.*

BOTTOM MAGNET PAIR:

1. Remove the two screws holding the plastic cover to the magnets.
2. Raise the playfield.
3. Remove the under playfield plastic trough.
4. Disconnect the electrical connections to the magnet pair and OPTOs. Make sure to mark where they go for reassembly (they should be labeled). Both magnets have different connectors to ensure they are reconnected correctly.
5. Under the playfield, remove the 2 Nylon Stop Nuts holding the Channel Mounting Bracket (Ref. Item 6, Page 94 or Item 8, Page 95) which holds down the magnet assembly.
6. Remove the magnet assembly from the game.
7. After reinstallation, use the "Track" test in Portals to insure all connections are back in the correct order.

TOP MAGNET:

1. In order to remove the top magnet, the ramps must be removed. See the " **Left & Right Ramp Removal as a single unit** ", Pages 100-102A & 100-102B.
2. Under the playfield, remove the 2 Nylon Stop Nuts holding the Channel Mounting Bracket (Ref. Item 6, Page 94 or Item 8, Page 95) which holds down the magnet assembly (do not touch the screws on the Adjustment Bracket until after reassembly). Disconnect the electrical connections for the magnet and the OPTOs. Remove the Magnet assembly.
3. After reinstallation, use the "Track" test in Portals to insure all connections are back in the correct order.

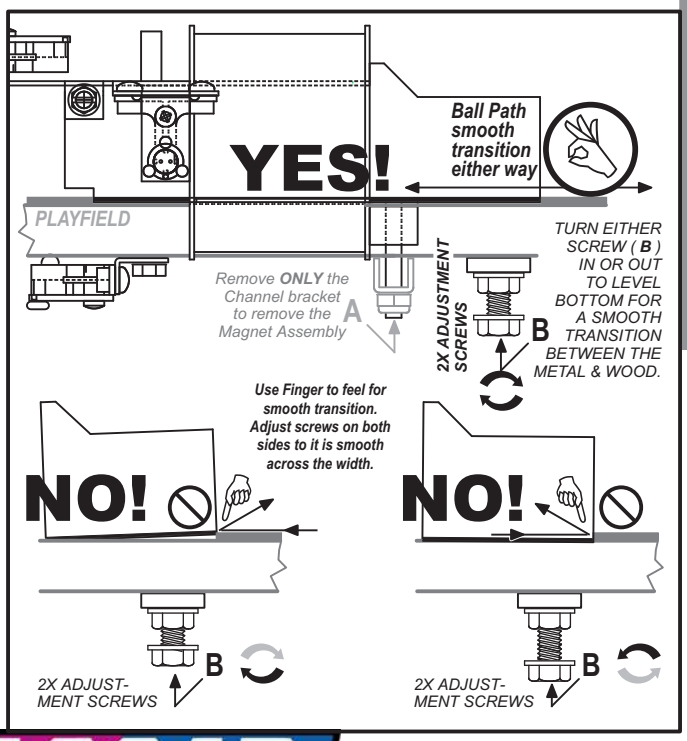

1-Coil (Ball Accelerator) Magnet Individual Parts Only (Items 1-7)

Nr.	2-COIL MAGNET PARTS	QTY.	SPI PART Nr.
1	1-Coil Magnet Mounting Bracket	1	535-9517-01
	Item 1 is secured below the playfield by: *See Item 6 and its' securing hardware.*		
2	OPTO Multi-Mounting Bracket	1	535-9501-02
	Item 2 is secured to Item 1 by: #8-32 X 1/4" SHWH Swage (Zc.) (Qty. 2/per) (237-5975-04)		
3	OPTO Single-Mounting Bracket	1	535-9400-00
	Item 3 is secured below the playfield by: #8 X 1/2" SHWH AB (Zc.) (Qty. 2) (234-5101-00)		
4	Transceiver OPTO PCB Assembly	4	500-6775-00
	Item 4 secured to Items 2 or 3 by : #6 X 5/16" PPH (Zc) TYPE -25 (Qty. 2/per) (237-5880-01)		

Nr.	2-COIL MAGNET PARTS	QTY.	SPI PART Nr.
5	Magnet Coil, 22-700 **(w/Leads + Conn.)**	1	500-6915-00
	For Individual Items use: Magnet Coil 22-700 (Ball Accelerator) (**090-5071-00**), 1 X 2 .093" Conn. Plug 03-09-2022 (**045-5004-02**) **and** Male Lugs 18ga (Qty. 2) (**055-5021-09**)		
6	Bracket, Channel Mounting	1	535-9504-00
	Item 6 secures Item 1 (Ref. A below) by: #8-32 Nylon Stop Nut (Qty. 2) (240-5102-00)		
7	Bracket, Magnet Trough Adjustment	1	515-7544-00
	Adjustment Scr. #8-32 X 3/4" SHWH	2	237-6010-00
	Item 7 is secured below the P/F by: #8 X 1/2" SHWH AB (Zinc) (Qty. 2) (234-5101-00)		

(ASM. REF. 500-6840-00, Items 1, 2, 4 (Qty. 3 of 4 only) & 5)
(ASM. REF. 500-6851-00, Items 3 & 4 (Qty. 1 of 4 only))

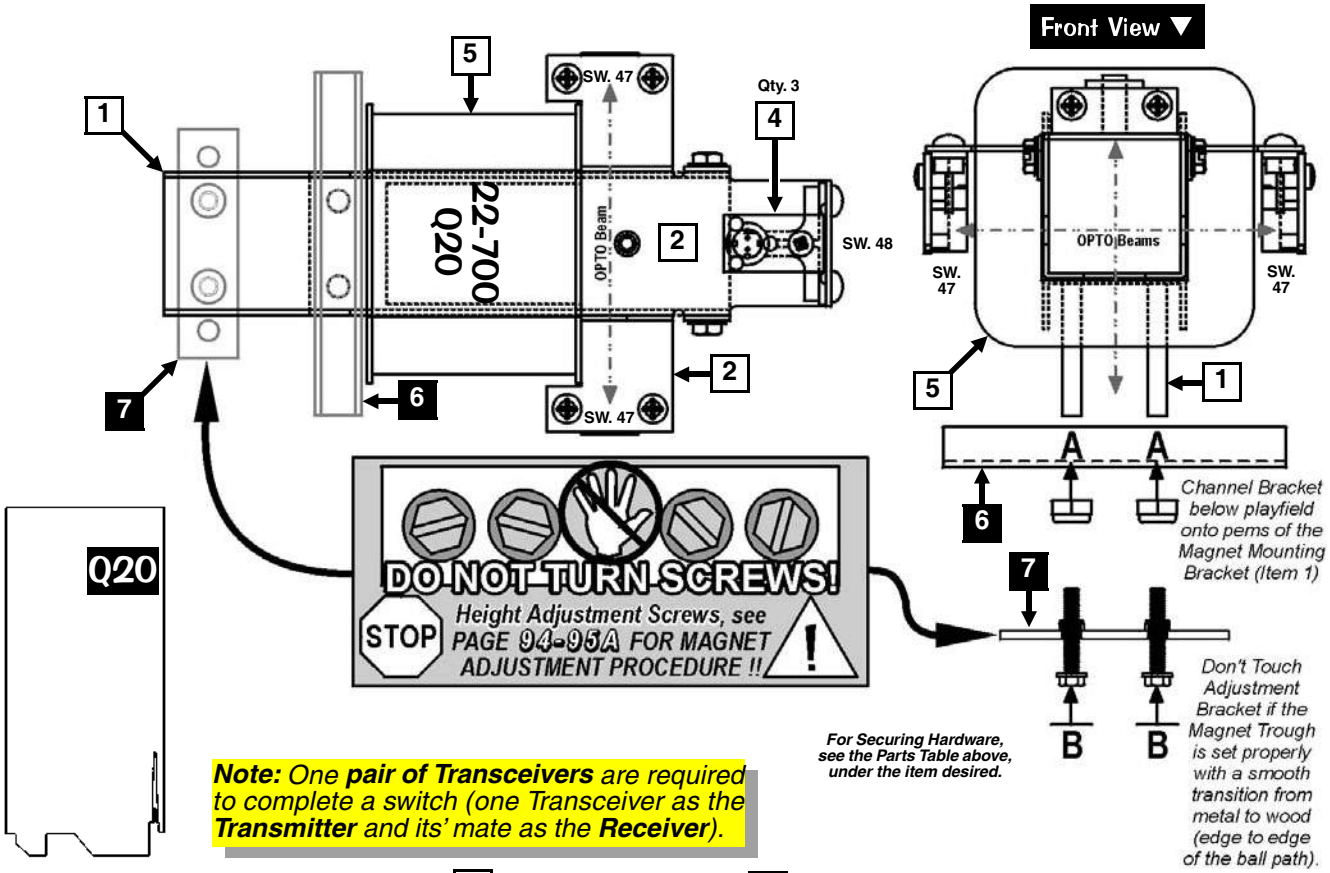

For Securing Hardware, see the Parts Table above, under the item desired.

Note: *One **pair of Transceivers** are required to complete a switch (one Transceiver as the **Transmitter** and its' mate as the **Receiver**).*

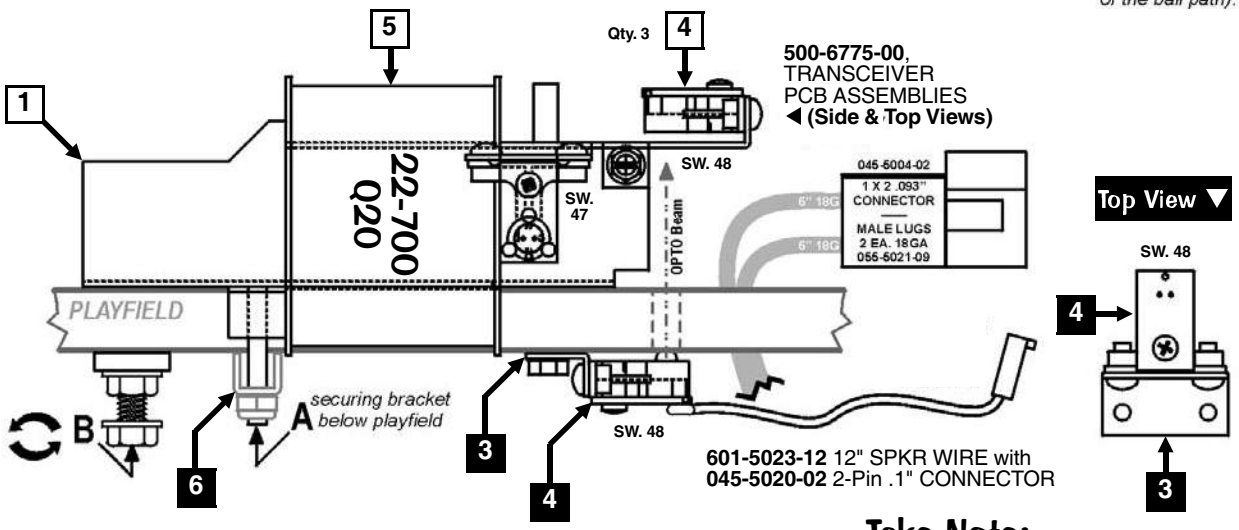

500-6775-00, TRANSCEIVER PCB ASSEMBLIES ◀ **(Side & Top Views)**

601-5023-12 12" SPKR WIRE with **045-5020-02** 2-Pin .1" CONNECTOR

For Securing Hardware, see the Parts Table above, under the item desired.

Take Note:

For a break-down of parts and wiring configuration of Item **4**, **Transceiver OPTO PCB** (**500-6775-00**) and associated PCBs *Not Shown* (Playfield OPTO Trans./Rec. Amplifier Board and Playfield X3 Triple Auxillary Board) see Section ***5***, *Chapter **4**, **Printed Circuit Boards** (**YELLOW PAGES**), Pages **148-153**.*

▼ DISASSEMBLY FOR REPAIR PROCEDURE PRECEDES THIS PAGE (94-95A) ▼

2-Coil (Ball Accelerator) Magnet Individual Parts Only (Items 1-8)

Nr.	2-COIL MAGNET PARTS	QTY.	SPI PART Nr.
1	2-Coil Magnet Mounting Bracket	1	535-9500-01
	Item 1 is secured below the playfield by: *See Item 8 and its' securing hardware.*		
2	OPTO Multi-Mounting Bracket	1	535-9501-02
	Item 2 is secured to Item 1 by: #8-32 X 1/4" SHWH Swage (Zc.) (Qty. 2/per) (237-5975-04)		
3	OPTO Single-Mounting Bracket	1	535-9400-00
	Item 3 is secured below the playfield by: #8 X 1/2" SHWH AB (Zc.) (Qty. 2) (234-5101-00)		
4	Transceiver OPTO PCB Assembly	6	500-6775-00
	Item 4 secured to Items 2 or 3 by : #6 X 5/16" PPH (Zc) TYPE -25 (Qty. 2/per) (237-5880-01)		
5	Retaining Bracket	1	535-9502-01
	Item 5 is secured to Item 1 by: #8-32 X 1/4" SHWH Swage (Zc.) (Qty. 2/per) (237-5975-04)		
6L	Magnet Coil, 22-700 **(w/Leads + Conn.)**	1	500-6915-**00**
	For Individual Items use: Magnet Coil 22-700 (Ball Accelerator) (**090-5071-00**), 2-Pin (.093") Conn. Plug 03-09-2022 (**045-5004-02**) **and** Male Lugs 18ga (Qty. 2) (**055-5021-09**)		

Nr.	2-COIL MAGNET PARTS	QTY.	SPI PART Nr.
6R	Magnet Coil, 22-700 **(w/Leads + Conn.)**	1	500-6915-**01**
	For Individual Items use: Magnet Coil 22-700 (Ball Accelerator) (**090-5071-00**), 3-Pin (.093") Conn. Plug (**045-5004-03**) **and** Male Lugs 18ga (Qty. 2) (**055-5021-09**)		
7	***Kit:* Plastics** *(includes -35 Cover)*	1	803-5000-86
	Item 7 is secured to Items 2 and 5 (Ref. B below) by: #6-32 X 5/8" PPH MS Sems (Zinc) (Qty. 1 per Item into threaded stud) (232-5203-00)		
	Note: *Individual Decals are not available individually, ordering of kit is required. For all pieces, see* ***Playfield Top - Plastics (Screened & Clear) Kit, Decals & Mylar Kits****, Page* ***69****.*		
8	Channel Mounting Bracket	1	535-9504-00
	Item 8 secures Item 1 (Ref. A below) by: #8-32 Nylon Stop Nut (Qty. 2) (240-5102-00)		

(ASM. REF. 500-6839-00, Items 1, 2, 4 (Qty. 5 of 6 only), 5, 6L & 6R)
(ASM. REF. 500-6851-00, Items 3 & 4 (Qty. 1 of 6 only))

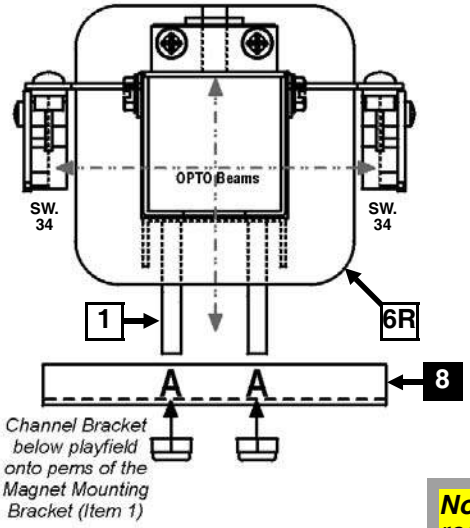

Front View ▲

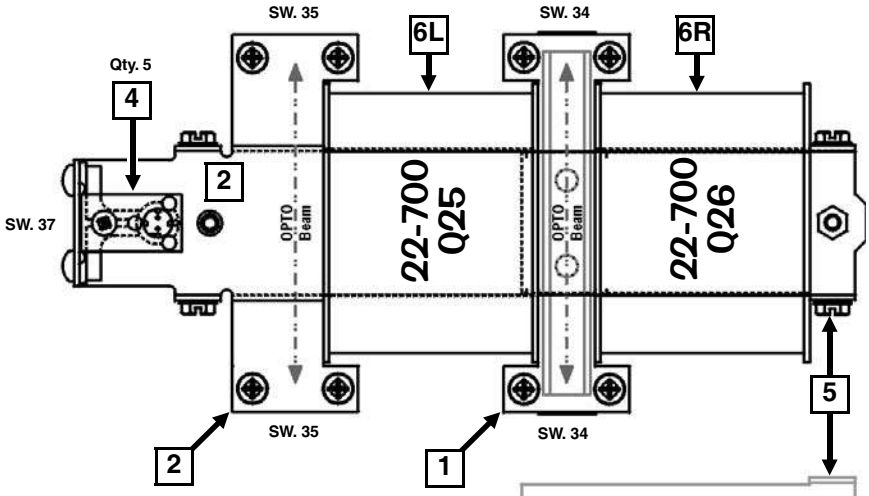

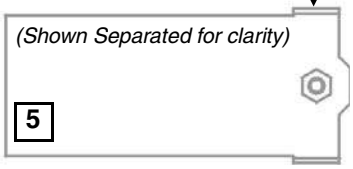

Note: *One* ***pair of Transceivers*** *are required to complete a switch (one Transceiver as the* ***Transmitter*** *and its' mate as the* ***Receiver****).*

For Securing Hardware, see the Parts Table above, under the item desired.

500-6775-00, TRANSCEIVER PCB ASSEMBLIES **(Side & Top Views)** ▶

Top View ▼

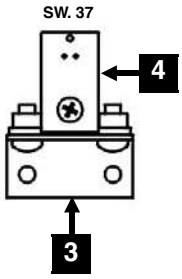

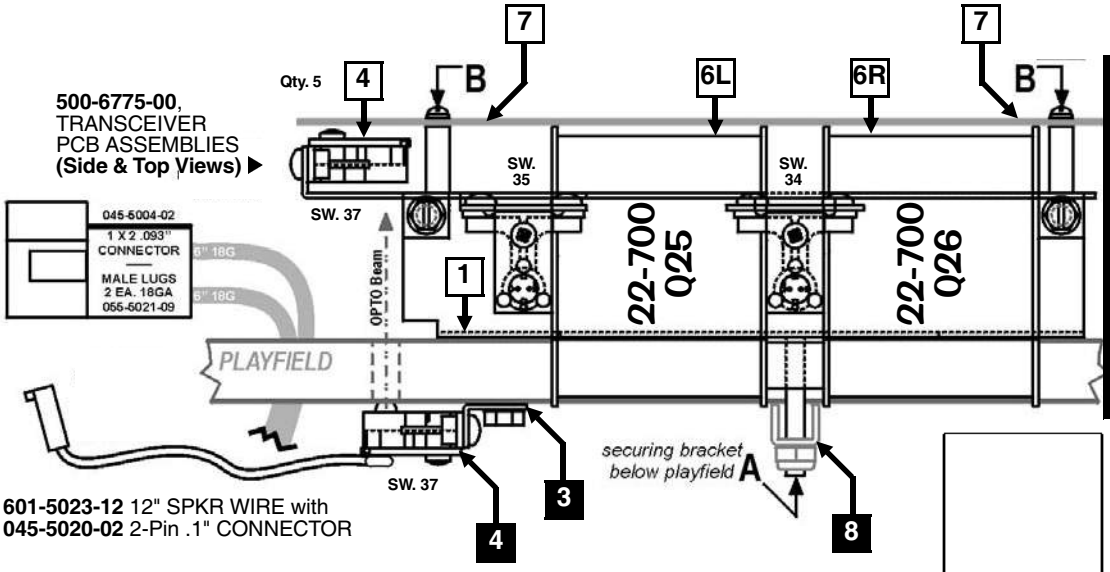

601-5023-12 12" SPKR WIRE with **045-5020-02** 2-Pin .1" CONNECTOR

For Securing Hardware, see the Parts Table above, under the item desired.

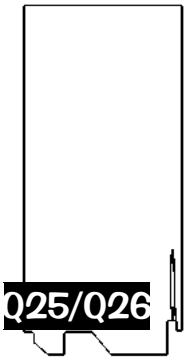

Take Note:

For a break-down of parts and wiring configuration of Item **4**, **Transceiver OPTO PCB** (**500-6775-00**) and associated PCBs *Not Shown* (Playfield OPTO Trans./Rec. Amplifier Board and Playfield X3 Triple Auxillary Board) see Section ***5****, Chapter* ***4****,* ***Printed Circuit Boards*** *(* ***YELLOW PAGES*** *), Pages* ***148-153****.*

3-Bank Drop Target Assembly, 500-6794-01-86 (Items 1-15)

and Assoc. Parts: See Parts Table Below. Assembled Views Continued on the next page.

Nr.	3-BANK DROP TRGT. PARTS	QTY.	SPI PART Nr.
1	Bracket, Main Housing 3-Bank D/T	1	535-9435-00
	Item 1 is secured below the playfield by: #8 X 1/2" SHWH AB (Zinc) (Qty. 6) (234-5101-00) ▶ ***TARGET HEIGHT ADJUSTMENT HARDWARE (Ref. A) :*** #8-32 X 3/4" SHWH MS (Zinc) (Qty. 2) (237-6010-00) **and, if required** #8-32 Keps Nuts (Qty. 2) (240-5104-00)		
2	Bracket, Coil Support (Upper)	1	535-9434-00
3	Bracket, Coil Support (Lower)	1	535-9430-00
	Items 2 & 3 are secured to Item 1 by: #8-32 X 3/8" SHWH (Zc.) (Qty. 2/per) (237-5975-00)		
4	Spring Washer (17/32" ID X 3/4" X 1")	1	269-5002-00
5	Coil, 25-1240	1	090-5034-00B
	Coil has a Diode (1N4004) (112-5003-00) positioned @ the bottom (below the lugs).		
6	Coil Sleeve (Short) (Formost #10-7077)	1	545-5076-01
7	Plunger	1	530-5410-01
8	Plunger Head *(Detachable)*	1	530-5511-00
9	Bracket, Target Lift Plate Attachment	1	535-9431-00
	Item 9 is secured to Item 8 by: #10-32 X 1/2" PPH MS Sems (Zc) (Qty. 1) (232-5402-00)		
10	Compression (Return) Spring	1	266-5020-00
11	Bracket, Access (Back) Plate 3-B. D/T	1	535-9432-00
	Item 11 is secured to Item 1 by: #8-32 X 3/8" SHWH (Ser, Zinc) Wax (Qty. 4) (237-5975-00) **and Item 11 is secured below the playfield by:** #8 X 1/2" SHWH AB (Zinc) (Qty. 2) (234-5101-00) ***Cable Dressing:*** *1/4" Clamp (Single) (Qty. 1) (040-5000-03)*		

Nr.	3-BANK DROP TRGT. PARTS	QTY.	SPI PART Nr.
12	Bracket, Dual Switch Support	1	535-9433-00
	Item 12 is secured to Item 1 by: #8-32 X 3/8" SHWH (Zc.) Wax (Qty. 2) (237-5975-00)		
13	Switch (D/T)	3	180-5158-00
	Item 13 is secured to Items 11 & 12 by: #4-40 X 5/8" HWH TF (Qty. 2/per) (237-5945-00) ***Ordering Note:*** If replacing **Item 13, Switch (D/T)**, ensure the diode on the switch is desoldered *(if present)* and wired correctly as per original *(more details on Page 111).*		
14	Drop Target Standard (White)	3	545-5048-01
15	Spring, Target Reset	3	265-5003-00
	Ordering Note: *If **500-6794-01-86** is unavailable*, order the individual part(s) actually required.		

ASSOCIATED PARTS **ARE NOT INCLUDED** WITH THE ABOVE ASSEMBLY.

Nr.	ASSOCIATED PART(S)	QTY.	SPI PART Nr.
AP-A	***Kit:*** **Decals** *(incl. -30, -31, -32 & -DT)*	1	802-5000-86
	Note: *Individual Decals (820-6371-XX) are not available individually, ordering of kit is required. For all pieces, see **Playfield Top - Plastics ..., Decals & Mylar Kits**, Page **69**.*		

(ASM. REF. 515-7370-00, Items 1-2)
(ASM. REF. 515-7374-00, Items 7-9)
(ASM. REF. 515-7373-00, Items 11-13)

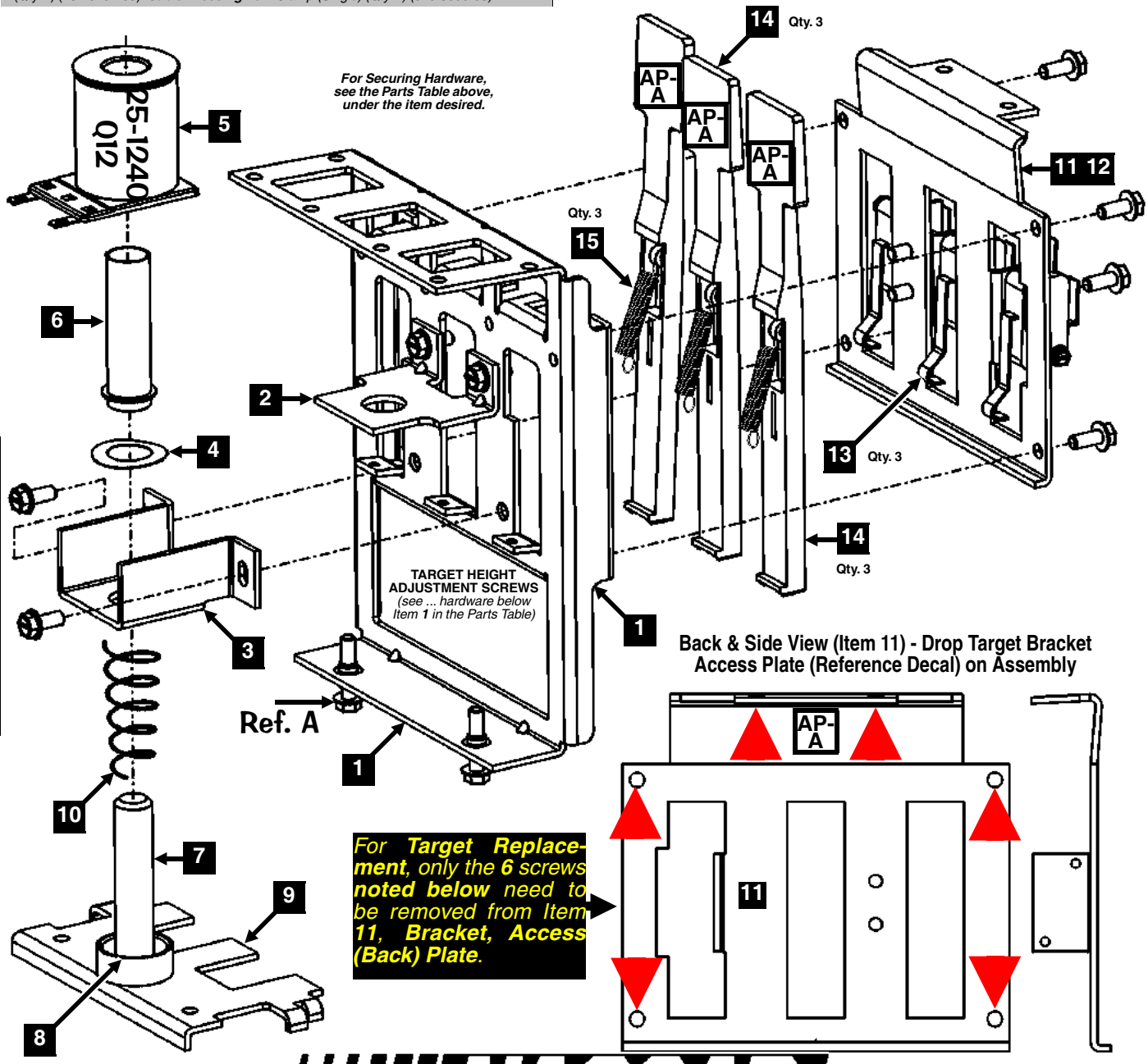

3-Bank Drop Target Assembly, 500-6794-01-86 (Items 1-15) Continued

Parts Table and Exploded View on previous page.

Drop Target Height Adjustment Procedure:

With the Drop Targets (**Item 14**) in the ***DOWN POSITION***, adjust the height of the Targets so the Drop Targets are "flush to slightly above" the *playfield surface* after replacing any target. This will ensure a **BALL TRAP** is ***not created*** where the ball can rest in the target hole area above the playfield.

Using a 1/4" Nut Driver *and/or* Flat Screw Driver *and turn in or out* the Screws to ***raise*** *or* ***lower*** the Target Lift Plate Attachment Bracket (**Item 9** *or* Ref. **A**) causing the Drop Targets to reach desired height as stated above.

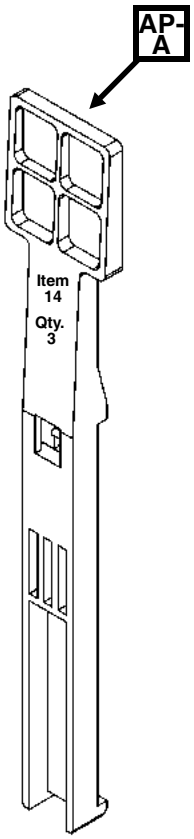

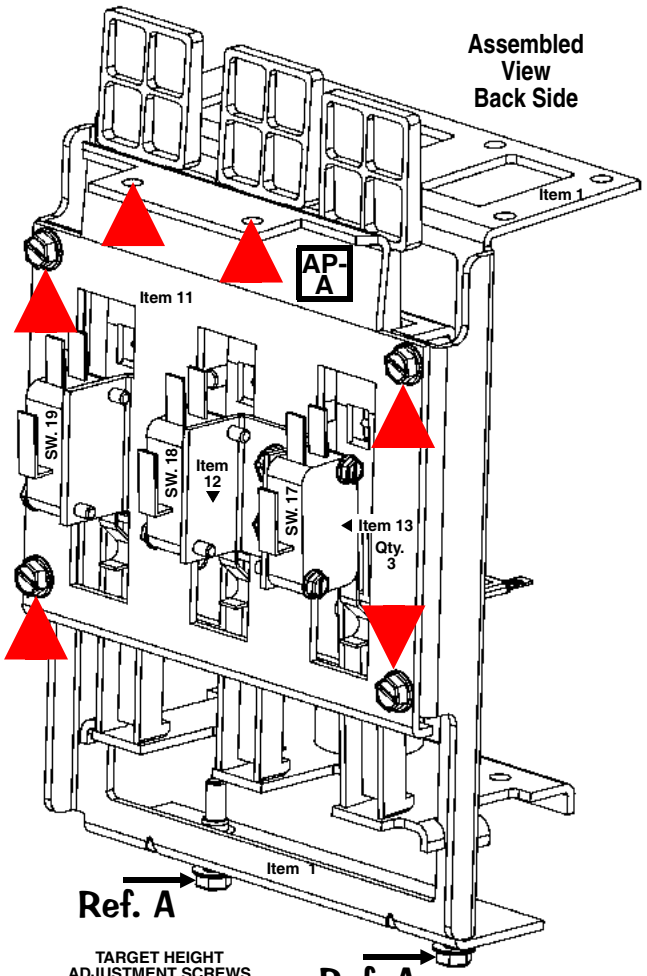

TARGET HEIGHT ADJUSTMENT SCREWS
*(see ... hardware below Item **1** in the Parts Table)*

For Securing Hardware, see the Parts Tables on the previous page, under the item(s) desired.

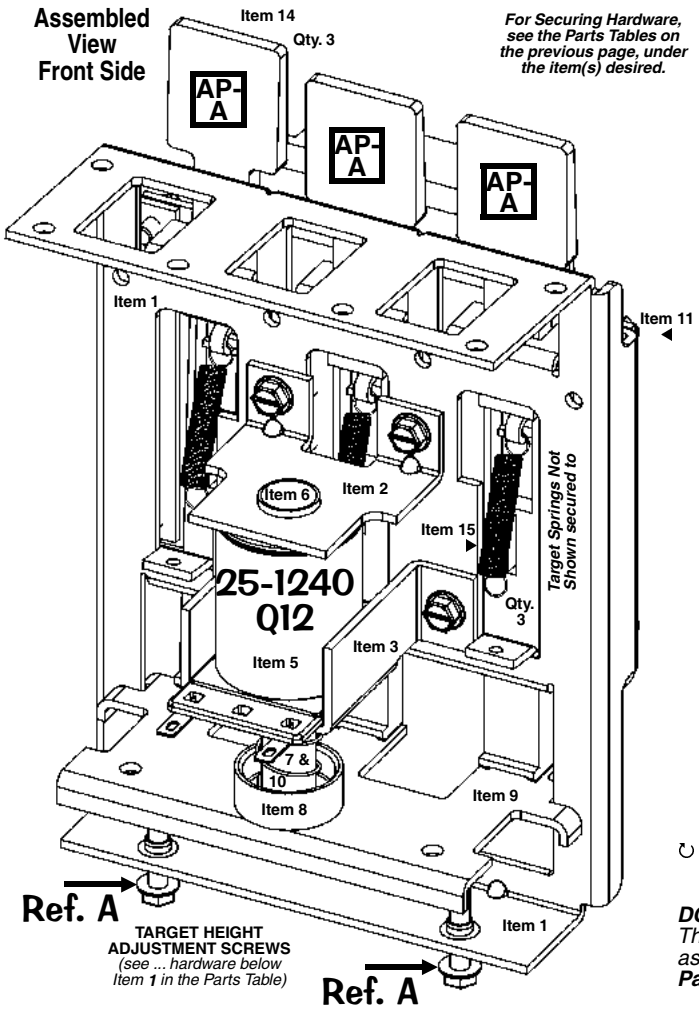

TARGET HEIGHT ADJUSTMENT SCREWS
*(see ... hardware below Item **1** in the Parts Table)*

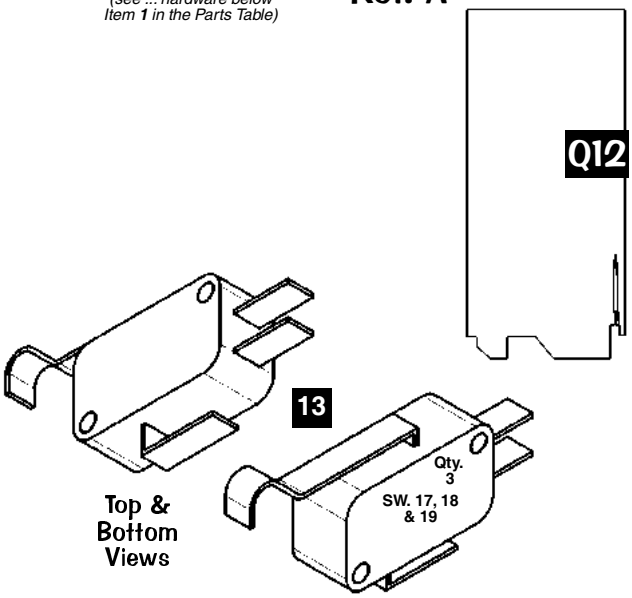

Take Note:

↻ **Coil Note:** ↻ Either -00**B** *or* -00**T** can be used for coil replacements. *B/T listed is preferable for easier diode access & may differ on game.*

DOTS: *The Switch Diodes, 1N4001, are not located on this Assembly. They are located on a Terminal Strips under the playfield near this assembly. See Section **5**, Chapter **2**, **Playfield Terminal Strips** ... , **Page 111**, for more details.*

Car Target Up-Down Scoop (VUK) Individual Parts Only (Items 1-24)

Parts Table & Different Views continued on the next page.

Nr.	CAR TARGET & VUK PARTS	QTY.	SPI PART Nr.
1	Bracket, Scoop (VUK) & Switch	1	535-9601-00
2	Bracket, Lift	1	535-9602-00
	Item 2 is secured to Item 1 by: #8-32 X 1/4" SHWH (Zinc) (Qty. 2) (237-5975-04)		
3	Bracket, Coil (Flipper) & Switch	1	535-9600-00
	Item 3 DOES NOT INCLUDE: Tape (UHMWPE) 7.1" (**626-5068-01**) as shown ▶ **ORDER ADDITIONAL (626-5068-01) IF REPLACING ITEM 3 BRACKET.** **Items 2 & 3 are secured below the P/F:** #8 X 1/2" SHWH AB (Zc.) (Qty. 7) (234-5101-00)		
4	Bracket, Latch	1	535-9604-00
	Item 4 is secured to Item 1 by: #8-32 X 3/8" SHWH (Zinc) (Qty. 3) (237-5975-00)		
5	Bearing (Spacer) .172" ID	2	530-5695-00
	Item 5 requires: Magnalube onto Pem Studs (000-0646-00)		
6	Retaining Plate *(joins 1A & 1B)*	1	515-7433-00
	Item 6 INCLUDES: Tape (UHMWPE) 4" (**626-5068-00**) *adhered to Ret. Plate* (**535-9603-00**). ▶ **READ INSTRUCTIONS ON ASSEMBLY REGARDING TIGHTENING OF STOP NUTS!!** **Item 6 is secured onto the Pem Studs of Item 2 by:** #8-32 Nylon Stop Nut (Qty. 2) (240-5102-00)		
7A	Coil Retaining Bracket	2	535-5203-03
	Item 7A is secured to Items 1& 4 by: #8-32 X 1/4" SHWH (Zinc) (Qty. 2/per) (237-5975-04)		
7B	Coil Retaining Bracket	2	535-7356-00
	Item 7B is secured to Item 3 by: #8-32 X 3/8" SHWH (Zinc) (Qty. 2/per) (237-5975-00)		
8A	Bracket, Switch Mntng. *(for Item 16A)*	1	535-9639-00
	Item 8A is secured to Item 1 by: #8-32 X 1/4" SHWH (Zinc) (Qty. 2) (237-5975-04)		
8B	Switch Plate *(for Item 16C)*	1	535-9748-00
9	Spring Washer (17/32" ID X 3/4" X 1")	3	269-5002-00

Nr.	CAR TARGET & VUK PARTS	QTY.	SPI PART Nr.
10A	Coil, 23-800	2	090-5001-00T
10B	Coil, 22-1080 (YEL-GRN)	1	090-5032-00T
	Coils (Items 10A & 10B) have a Diode (1N4004) (112-5003-00) positioned @ top (above lugs next to windings).		
11A	Coil Sleeve *(in Item 10A, Vertical)*	1	545-5076-01
11B	Coil Sleeve (with Extension)	1	545-5847-01
11C	Coil Sleeve *(in Item 10C, Horizontal)*	1	545-5411-00
12A	Steel Plunger Assembly	1	515-7309-00
12B	Solid Plunger & Extension Assembly	1	515-7421-00
12C	Plunger, SQ. Top Angle Cut *(in 10C)*	1	530-5686-00
13A	Washer (.45" ID X .75" OD X .03") *(on 12B)*	1	242-5085-00
	Item 13A is secured to Item 12B by: Retaining Ring, 7/16" ø Shaft (Qty. 1) (270-5005-00)		
13B	Washer (5/16" Square Hole) *(on 12C)*	1	535-9629-00
	Item 13B is secured to Item 12C by: Retaining Ring, 5/16" ø Shaft (Qty. 1) (270-5003-00)		
14A	Comp. (Return) Spring *(on 12A/12C)*	2	266-5020-00
14B	Comp. (Return) Spring *(on 12B)*	1	266-5087-00
15	Rubber Bumper (Grommet) *(on 1 & 3)*	2	545-5105-00
16A	Micro Sw. (1-1/4" Flat Blade Actuator)	1	180-5010-04
16B	Micro Sw. (VUK) Hvy. Duty (Y-Act'tor)	1	180-5116-01
	Switch requires a Diode (1N4004) (112-5003-00) located on a Terminal Strip, read note ▼.		
16C	Micro Switch (Sm. + Bend Actuator)	1	180-5201-00

Parts Table & Different Views continued on the next page.

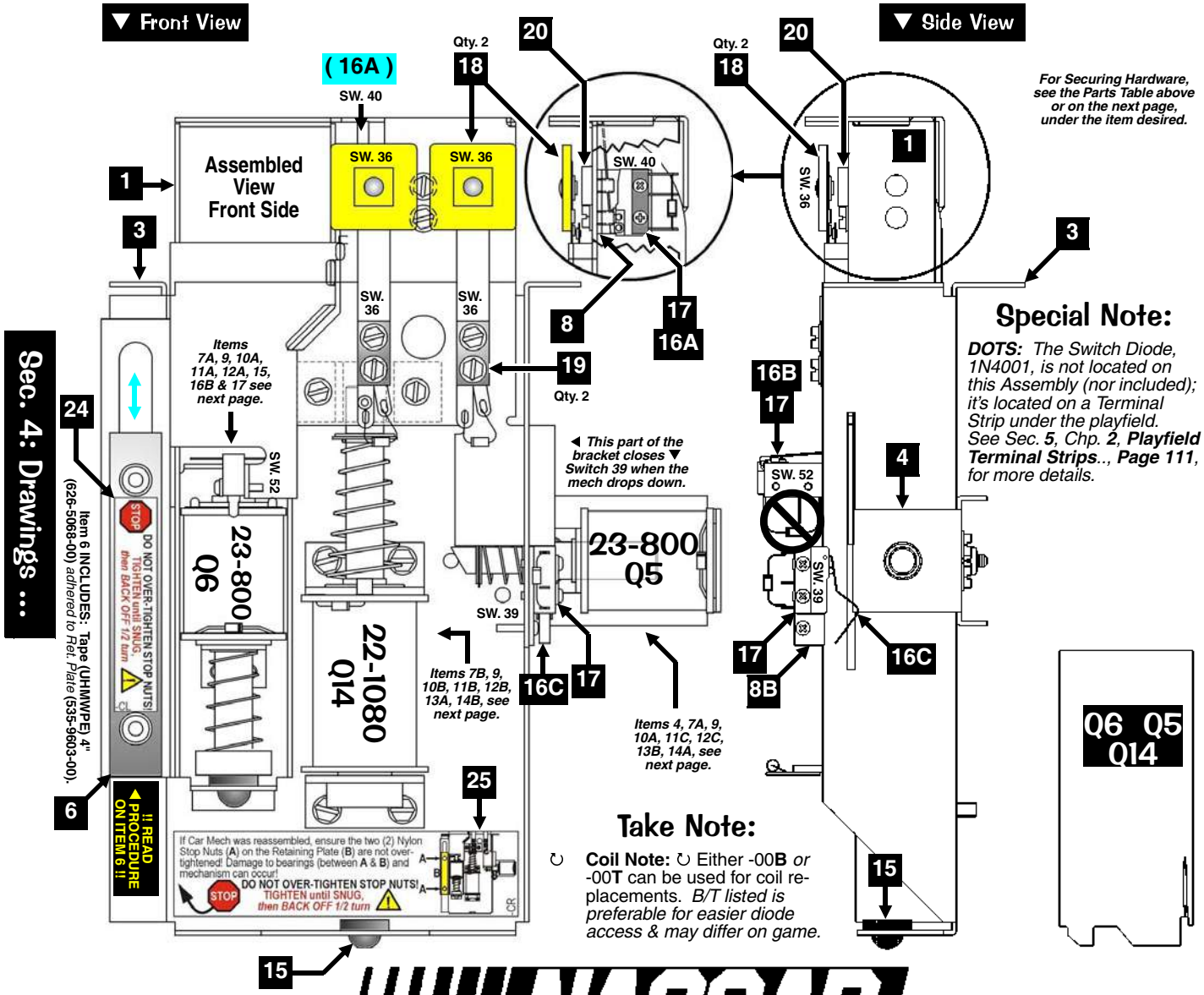

Special Note:

DOTS: *The Switch Diode, 1N4001, is not located on this Assembly (nor included); it's located on a Terminal Strip under the playfield. See Sec.* ***5****, Chp.* ***2****,* ***Playfield Terminal Strips****.., Page* ***111****, for more details.*

Take Note:

↻ **Coil Note:** ↻ Either -00**B** *or* -00**T** can be used for coil replacements. *B/T listed is preferable for easier diode access & may differ on game.*

Car Target Up-Down Scoop (VUK) Individual Parts Only (Items 1-24) Continued

Parts Table & Different Views continued from the previous page.

▼ DISASSEMBLY FOR REPAIR PROCEDURE FOLLOWS THIS PAGE (98-99A-B) ▼

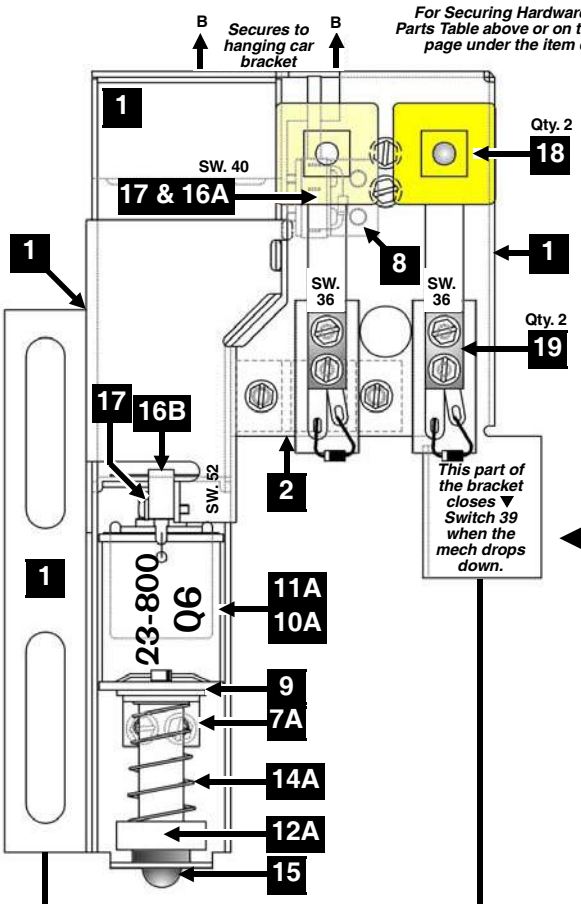

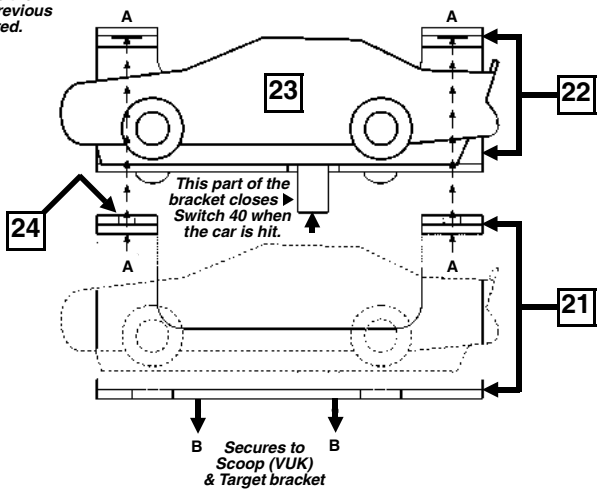

▼ Front Views ▲

Nr.	CAR TARGET & VUK PARTS	QTY.	SPI PART Nr.
	Parts Table & Different Views continued from the previous page.		
17	Switch Body Protect Plate	3	535-6539-00
	Item 17 is secured to Items 16A & 16B by: #2-56 X 7/16" PPH MS (Zc.) (Qty. 2/per) (237-5872-01)		
18	Sw. & Target Asm. 1" Sq. (Yellow)	2	515-5162-06
	Item 18 requires : Insulator (Fiche Paper) (Qty. 1/per) (545-6239-00)		
	For Individual Items use : See Appendix **I**, Stand-Up Targets, Item **3A** (**A1-A4**)		
	Switches (Items 16A-C, listed on the previous page, & 18) have a Diode (1N4004) (112-5003-00). *Can be replaced with (1N4001) (112-5001-00).*		
19	Sw. Body Protect Plate *(Lg. for Stack)*	2	535-5045-00
	Item 19 is secured to Item 18 by: #6-32 X 5/8" SHWH (Zc.) (Qty. 2/per) (237-5976-04)		
20	Foam Pad **(Self-Adhesive)** *(for Item 18)*	1/per	626-5029-00
21	Bracket, Car Hanger	1	535-9633-00
	Item 21 is secured above onto Item 1 (Ref. B) by: #8-32 X 3/8" PFH 82° Undercut MS (Zinc) (Qty. 2) (237-6030-00)		
22	Bracket, Car Mounting	1	535-9634-00
	Item 24 is secured to Item 21 (Ref. A) by: #8-32 X 3/8" SHWH (Zinc) (Qty. 2) (237-5975-00) **and** Nut (Pivot) (Qty. 2) (530-5698-00)		
23	Car (Target) *Molded Plastic*	1	545-6233-00
	Items 23 is secured by: #8-32 X 3/8" PPH MS Ext. Sems (Zinc) (Qty. 4) (232-5301-00)		
24	***Kit:* Decals** *(incl. -CL, -CR, -41 & -42)*	1	802-5000-86
	Note: *Individual Decals (820-6371-XX & 820-6374-XX) are not available individually, ordering of kit is required. For all pieces, see* ***Playfield Top - ... Decals & Mylar Kits****, Pg.* ***69****.*		

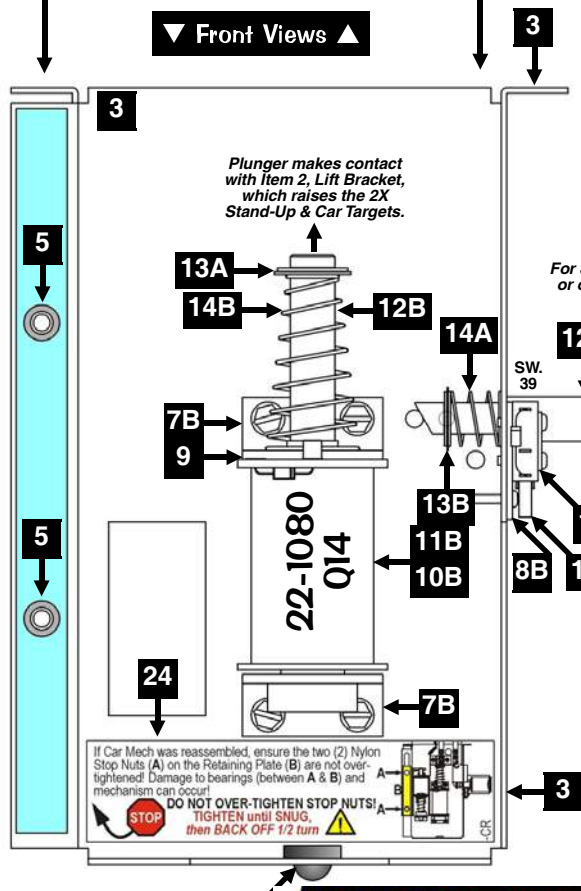

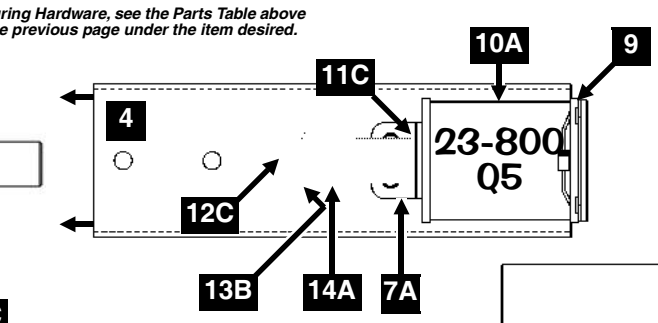

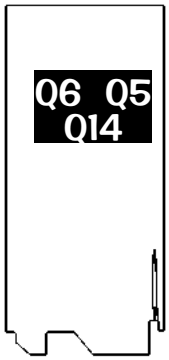

(ASM. REF. 500-6836-00, Items 1-20 *without Item 24*)
(ASM. REF. 515-7424-00, Items 4, 7A (Qty. 1), 9 (Qty. 1), 10A (Qty. 1) & 11C *(515-7424-00 doesn't include Items 12C, 13B, 14A)*
(ASM. REF. 515-7425-00, Items 7B (Qty. 2), 9 (Qty. 1), 10B, 11B, 12B, 13A & 14B)
(ASM. REF. 515-7426-00, Items 3, 7B (Qty. 2), 8B, 9 (Qty. 1), 10B, 11B, 12B, +12C, 13A, +13B, +14A (Qty. 1), 14B, +15 (Qty. 1), +16C & +17 (Qty. 1))
(ASM. REF. 515-7427-00, Items 1, 2, 7A (Qty. 1), 8A, 9 (Qty. 1), 10A (Qty. 1), 11A, 12A, 14A (Qty. 1), 15 (Qty. 1), 16A, 16B, 17 (Qty. 2), 18 (Qty. 2), 19 (Qty. 2) & 20 (Qty. 2))
(ASM. REF. 515-7442-00, Items 22 & 23 *without Item 24 (-41, -42)*)

Item 3 DOES NOT INCLUDE: Tape (UHMWPE) 7.1" (626-5068-01) *adhere to Bracket* **(535-9600-00)** *as shown.*

◀ Reference Pages 98-99 For Items & Part Numbers

Car Target (Garage) Up-Down Scoop Disassembly For Repair

Technicians Remember the Basics: *All Service should be done by qualified personnel.* ***ALWAYS REMOVE POWER BEFORE SERVICING****. Service assemblies which are below the playfield, with the playfield in its' most upright position (leaning against the Backbox). Raise it carefully! Ensure the bottom edge (back) of the playfield is still resting on the Cabinet Side Support Rails and is forward enough to allow the Playfield to lean against the backbox at an angle so it does not fall forward.* ***When lowering, rest on the support brackets first, then continue to place in cabinet.*** *Ensure playfield is pushed forward 'til the stop is felt, before lowering to ensure the Trough Popper Mechanism clears the Coin Mechanisms on the Coin Door. Re-assembly is the reverse of disassembly (removal). Keep track of securing hardware (which are referenced under the items in the Parts Table) Use* ***Loctite Blue 242*** *on the threads all screws to ensure the screws will not loosen in play.*

When in doubt, give us a call!

CAR HIT SWITCH (ITEM 16A, SW. 40):

If this Micro Switch needs to be completely replaced, go to **COMPLETE MECHANISM REMOVAL** *(opposite this page).* The easiest way to **adjust** the car hit switch is by removing the Car (Molded Plastic, Item 23). *This is accomplished as follows:*

1. Loosen and remove the two screws (Ref. A, under Item 22) holding the rocking car platform (Bracket, Car Mounting, Item 22) to the frame (Bracket, Car Hanger, Item 21). These are the two screws that are on the ends of the mounting arms. Be very careful not to misplace the 2 shoulder nuts that are located under the arm. *If necessary, the nuts may have to held with a 3/8" wrench.*
2. Remove the rocking platform with the car attached.
3. The switch is now in view under the platform awaiting adjustment.

CAR (ITEM 23) REPLACEMENT:

1. Loosen and remove the two screws (Ref. A, under Item 22) holding the rocking car platform (Bracket, Car Mounting, Item 22) to the frame (Bracket, Car Hanger, Item 21). These are the two screws that are on the ends of the mounting arms. Be very careful not to misplace the 2 shoulder nuts that are located under the arm. *If necessary, the nuts may have to held with a 3/8" wrench.*
2. Remove the rocking platform with the car attached.
3. On the underside of the carriage, there are 4 screws holding the car (Item 23) to the platform. Remove the screws.

The following three (3) coils can be replaced without removing the entire mechanism.

UP / DOWN COIL (Item 10) REPLACEMENT:

1. Unsolder the 2 wires attached to the coil (Item 10B). *Note which wire goes to which lug.*
2. There are 2/per screws securing the Coil Retaining Brackets (Item 7B) which secure the Coil and Plunger (Item 12B) to the mechanism (Item 3). Remove the screws and brackets.
3. Remove the Coil and Plunger. Note the position of the Spring Washer (Item 9).
4. Use a long nose plier to remove the Retaining Ring (Ref. under Item 13A) from the end of the Plunger.
5. Remove the Washer (Item 13A) and Spring (Item 14B) from the end of the Plunger. *Note the that the spring goes on the plunger with the large side towards the coil.*
6. Remove the Plunger from the coil.
9. Reassemble components on new coil. Use a new Coil Sleeve (Item 11B), if necessary.

continued next page.

The following coils can be replaced without removing the entire mechanism.

LATCH COIL (ITEM 10A, HORIZONTAL) REPLACEMENT:

1. Unsolder the 2 wires attached to the coil (Item 10A). *Note which wire goes to which lug*.
2. There are 2 screws securing the Coil Retaining Bracket (Item 7A) which secure the Coil and Plunger (Item 12C) to the mechanism (Item 3). Remove the screws and bracket.
3. Remove the Coil and Plunger. Note the position of the Spring Washer (Item 9).
4. Use a long nose plier to remove the Retaining Ring (Ref. under Item 13B) from the end of the Plunger.
5. Remove the Washer (Item 13B) and Spring (Item 14A) from the end of the Plunger. *Note the that the spring goes on the plunger with the large side towards the coil.*
6. Remove the Plunger from the coil.
7. Reassemble components on new coil. Use a new Coil Sleeve (Item 11C), if necessary.

SCOOP (VUK or POPPER) COIL (ITEM 10A, VERTICAL) REPLACEMENT:

1. Unsolder the 2 wires attached to the coil (Item 10A). *Note which wire goes to which lug*.
2. There are 2 screws securing the Coil Retaining Bracket (Item 7A) which secure the Coil and Plunger (Item 12A) to the mechanism (Item 3). Remove the screws.
3. Remove the Coil and Plunger. Note the position of the Spring Washer (Item 9).
4. Remove the Spring (Item 14A) from the end of the Plunger. *Note the that the spring goes on the plunger with the large side towards the coil.*
6. Remove the Plunger from the coil..
7. Reassemble components on new coil. Use a new Coil Sleeve (Item 11B), if necessary.

COMPLETE MECHANISM REMOVAL:

1. Remove the Car platform as outlined in **CAR REPLACEMENT** (opposite page).
2. Under the playfield, disconnect the 2 cable connectors that attach to the mechanisms electronics (coils and switch wiring).
3. Remove the 5 screws (Ref. under Item 1) that attach the mechanism to the playfield. Because of the weight of the mechanism, 2 of these screws go into T-Nuts on the top of the playfield. ***Be carefull on reassembly to note where these two screws go.***
4. Remove the mechanism from the playfield.

SLIDING STRUCTURE REMOVAL AND ADJUSTMENT:

1. Remove the complete mechanism from the game as outlined above.
2. Remove the two Nylon Stop Nuts (Ref. under Item 6) from the left top side of the slider bar.
3. Remove the Retaining Plate (Item 6).
4. Remove the two bushings (bearings) (Item 5) that are in the slider channels of the Scoop (VUK) Bracket (Item 1).
5. Remove the entire slider plate mechanism.

Special Note >> TECH ALERT! << on re-assembly:

5R. Place the slider plate back in its retaining groove on the right side and over the two locking studs on the left side (Ref. view of Item 5).
4R. Place a small amount of magnalube or other light teflon grease on the centers and perimeter of the bushings (bearings). Place them in the channels.
3R. Put the Retaining Plate (Item 6) in place.
2R. Put on the two Nylon Stop Nuts. Tighten until they just bottom the plate on the bushings **>> THEN BACK OFF THE NUTS 1/2 TURN.** This clearance is VITAL to ensure the bushings rotate freely!
1R. Reinstall mechanism on game.

Right Plastic Ramp, Truck (Ramp) Kicker, Diverter and Wire Ramps
Individual Parts Only (Items 1-24*)
Views and Parts Table continued on the next page.

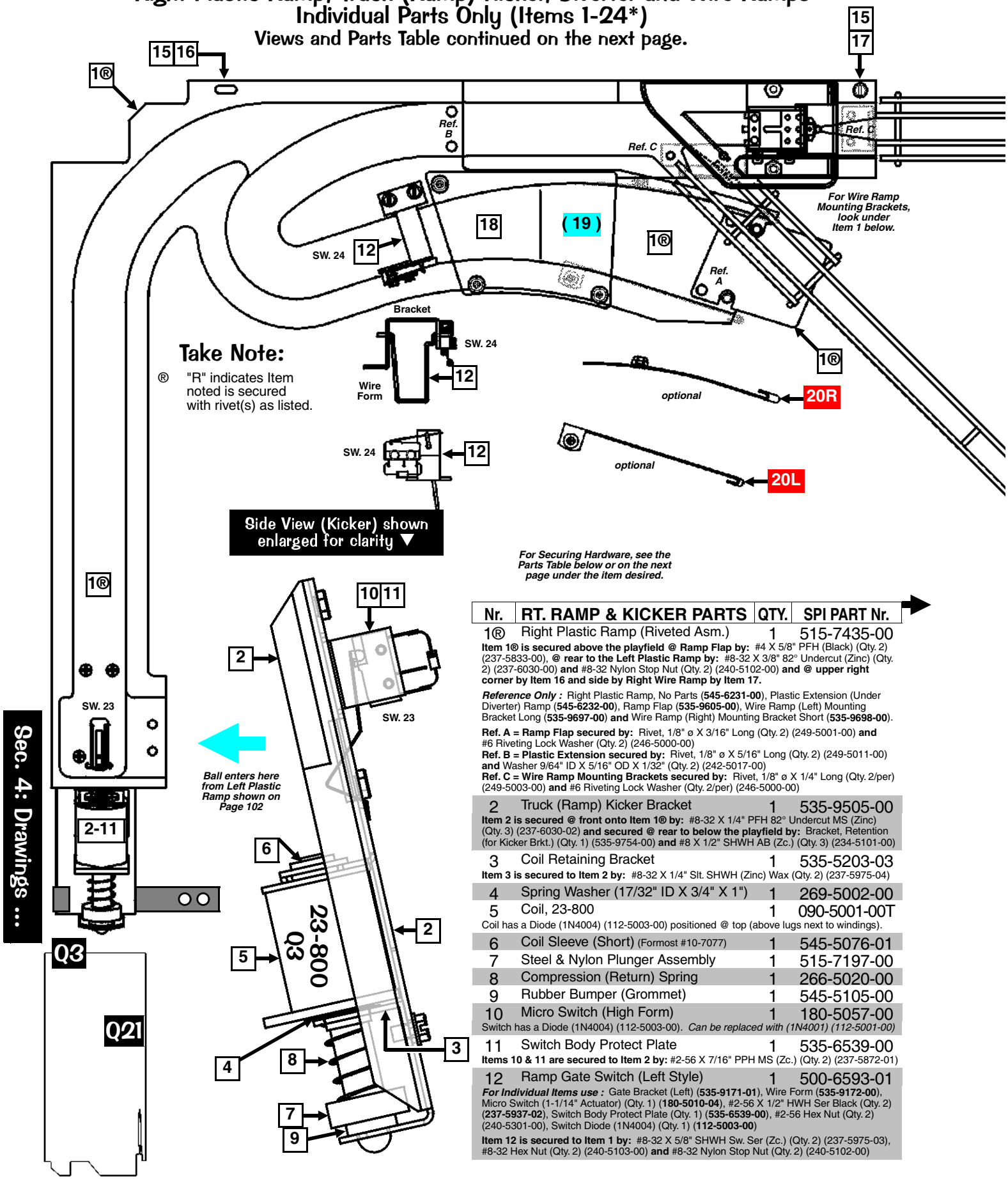

For Securing Hardware, see the Parts Table below or on the next page under the item desired.

Nr.	RT. RAMP & KICKER PARTS	QTY.	SPI PART Nr.
1®	Right Plastic Ramp (Riveted Asm.)	1	515-7435-00
	Item 1® is secured above the playfield @ Ramp Flap by: #4 X 5/8" PFH (Black) (Qty. 2) (237-5833-00), **@ rear to the Left Plastic Ramp by:** #8-32 X 3/8" 82° Undercut (Zinc) (Qty. 2) (237-6030-00) **and** #8-32 Nylon Stop Nut (Qty. 2) (240-5102-00) **and @ upper right corner by Item 16 and side by Right Wire Ramp by Item 17.**		
	Reference Only : Right Plastic Ramp, No Parts (**545-6231-00**), Plastic Extension (Under Diverter) Ramp (**545-6232-00**), Ramp Flap (**535-9605-00**), Wire Ramp (Left) Mounting Bracket Long (**535-9697-00**) **and** Wire Ramp (Right) Mounting Bracket Short (**535-9698-00**).		
	Ref. A = Ramp Flap secured by: Rivet, 1/8" ø X 3/16" Long (Qty. 2) (249-5001-00) **and** #6 Riveting Lock Washer (Qty. 2) (246-5000-00) **Ref. B = Plastic Extension secured by:** Rivet, 1/8" ø X 5/16" Long (Qty. 2) (249-5011-00) **and** Washer 9/64" ID X 5/16" OD X 1/32" (Qty. 2) (242-5017-00) **Ref. C = Wire Ramp Mounting Brackets secured by:** Rivet, 1/8" ø X 1/4" Long (Qty. 2/per) (249-5003-00) **and** #6 Riveting Lock Washer (Qty. 2/per) (246-5000-00)		
2	Truck (Ramp) Kicker Bracket	1	535-9505-00
	Item 2 is secured @ front onto Item 1® by: #8-32 X 1/4" PFH 82° Undercut MS (Zinc) (Qty. 3) (237-6030-02) **and secured @ rear to below the playfield by:** Bracket, Retention (for Kicker Brkt.) (Qty. 1) (535-9754-00) **and** #8 X 1/2" SHWH AB (Zc.) (Qty. 3) (234-5101-00)		
3	Coil Retaining Bracket	1	535-5203-03
	Item 3 is secured to Item 2 by: #8-32 X 1/4" Slt. SHWH (Zinc) Wax (Qty. 2) (237-5975-04)		
4	Spring Washer (17/32" ID X 3/4" X 1")	1	269-5002-00
5	Coil, 23-800	1	090-5001-00T
	Coil has a Diode (1N4004) (112-5003-00) positioned @ top (above lugs next to windings).		
6	Coil Sleeve (Short) (Formost #10-7077)	1	545-5076-01
7	Steel & Nylon Plunger Assembly	1	515-7197-00
8	Compression (Return) Spring	1	266-5020-00
9	Rubber Bumper (Grommet)	1	545-5105-00
10	Micro Switch (High Form)	1	180-5057-00
	Switch has a Diode (1N4004) (112-5003-00). *Can be replaced with (1N4001) (112-5001-00)*		
11	Switch Body Protect Plate	1	535-6539-00
	Items 10 & 11 are secured to Item 2 by: #2-56 X 7/16" PPH MS (Zc.) (Qty. 2) (237-5872-01)		
12	Ramp Gate Switch (Left Style)	1	500-6593-01
	For Individual Items use : Gate Bracket (Left) (**535-9171-01**), Wire Form (**535-9172-00**), Micro Switch (1-1/14" Actuator) (Qty. 1) (**180-5010-04**), #2-56 X 1/2" HWH Ser Black (Qty. 2) (**237-5937-02**), Switch Body Protect Plate (Qty. 1) (**535-6539-00**), #2-56 Hex Nut (Qty. 2) (240-5301-00), Switch Diode (1N4004) (Qty. 1) (**112-5003-00**)		
	Item 12 is secured to Item 1 by: #8-32 X 5/8" SHWH Sw. Ser (Zc.) (Qty. 2) (237-5975-03), #8-32 Hex Nut (Qty. 2) (240-5103-00) **and** #8-32 Nylon Stop Nut (Qty. 2) (240-5102-00)		

Right Plastic Ramp, Truck (Ramp) Kicker, Diverter and Wire Ramps Individual Parts Only (Items 1-24‡) Continued

Views and Parts Table continued from previous page.

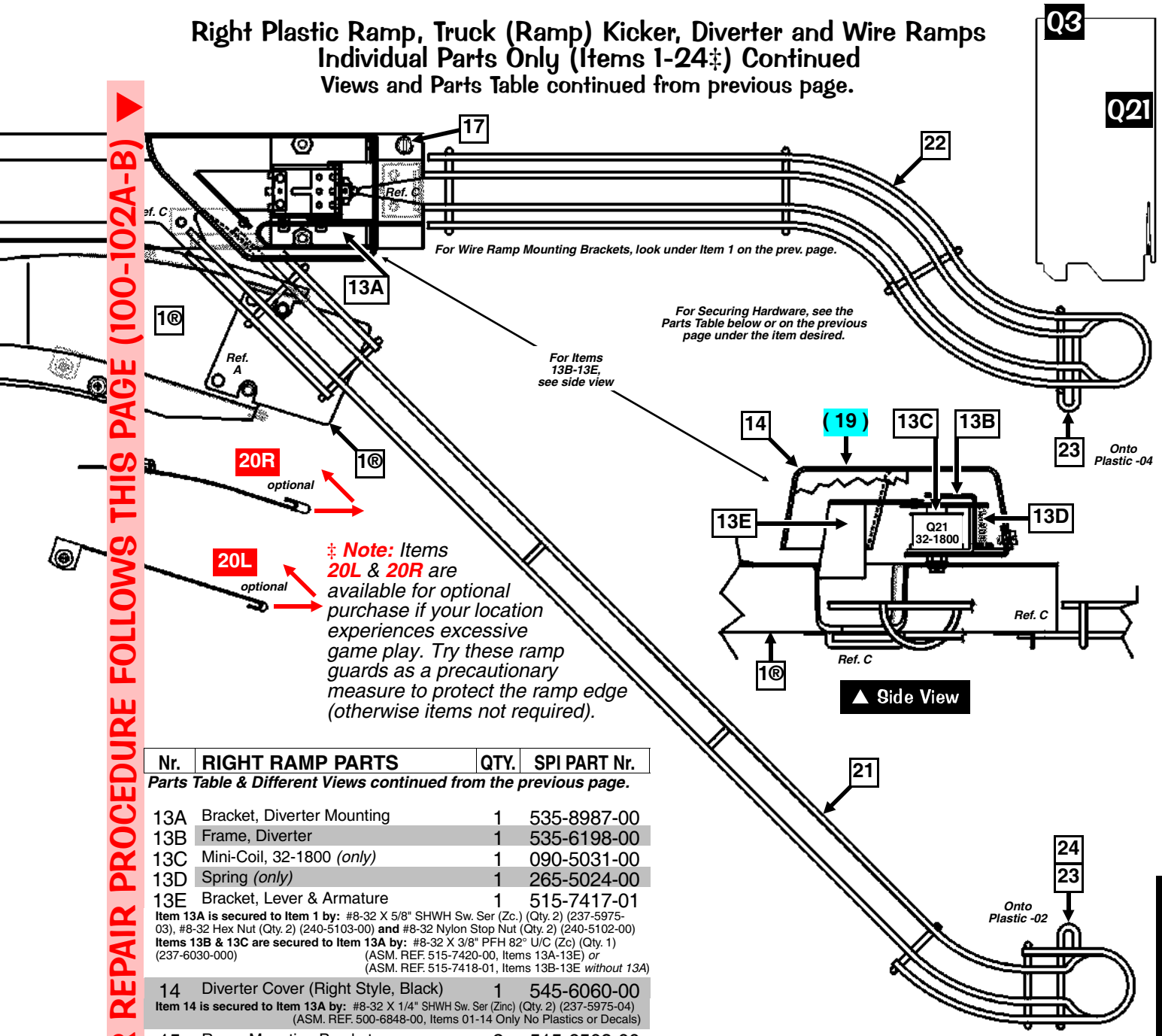

‡ **Note:** Items **20L** & **20R** are available for optional purchase if your location experiences excessive game play. Try these ramp guards as a precautionary measure to protect the ramp edge (otherwise items not required).

Nr.	RIGHT RAMP PARTS	QTY.	SPI PART Nr.
	Parts Table & Different Views continued from the previous page.		
13A	Bracket, Diverter Mounting	1	535-8987-00
13B	Frame, Diverter	1	535-6198-00
13C	Mini-Coil, 32-1800 *(only)*	1	090-5031-00
13D	Spring *(only)*	1	265-5024-00
13E	Bracket, Lever & Armature	1	515-7417-01
	Item 13A is secured to Item 1 by: #8-32 X 5/8" SHWH Sw. Ser (Zc.) (Qty. 2) (237-5975-03), #8-32 Hex Nut (Qty. 2) (240-5103-00) **and** #8-32 Nylon Stop Nut (Qty. 2) (240-5102-00)		
	Items 13B & 13C are secured to Item 13A by: #8-32 X 3/8" PFH 82° U/C (Zc) (Qty. 1) (237-6030-000) (ASM. REF. 515-7420-00, Items 13A-13E) *or* (ASM. REF. 515-7418-01, Items 13B-13E *without 13A*)		
14	Diverter Cover (Right Style, Black)	1	545-6060-00
	Item 14 is secured to Item 13A by: #8-32 X 1/4" SHWH Sw. Ser (Zinc) (Qty. 2) (237-5975-04) (ASM. REF. 500-6848-00, Items 01-14 Only No Plastics or Decals)		
15	Ramp Mounting Bracket	2	515-6508-00
	Item 15 is secured to Wood Rail by: #6 X 1/2" PTH A (Zinc) (Qty. 2/per) (237-5809-00)		
16	Hex Spacer 2-5/8"	1	254-5008-08
17	Hex Spacer 2-1/8"	1	254-5008-32
	Items 16 & 17 are secured by: #6-32 X 3/8" PPH (Qty. 1) (232-5201-00) **and** #6 Washer (Qty 1/per) (242-5001-00)		
18	***Kit:* Plastics** *(includes -23)*	1	803-5000-86
	Item 18 is secured to Item 1 by: 1/2" X 3/8" Plastic Spacer Gray (Qty. 3) (254-5000-01), #6-32 X 1" PPH MS Ext. Sems (Zinc) (Qty. 3) (232-5206-00) **and** #6-32 Nylon Stop Nut (Qty. 3) (240-5005-00)		
19*	***Kit:* Decals** *(incl. -33, -34, -35 & -01)*	1	802-5000-86
	Note: *Individual Plastics (830-6035-XX) & Decals (820-6371-XX & 820-6366-XX) are not available individually, ordering of kit is required. For all pieces, see* ***Playfield Top - Plastics (Screened & Clear) Kit, Decals & Mylar Kits****, Page* ***69****.*		
20L‡	***Kit:* Ramp Guard R-L (for Lt. Side)**	1	502-5041-49
	Optional Purchase*, if required (not included with game): Includes Bracket (****535-9749-00****), #8-32 X 3/8" Phillips* ***PAN HEAD*** *(PPH) (Qty. 1) (232-5301-00)* ***and*** *#8-32 Nylon Stop Nut (Qty. 1) (240-5102-00)*		
20R‡	***Kit:* Ramp Guard R-R (for Rt. Side)**	1	502-5041-47
	Optional Purchase*, if required (not included with game): Includes Bracket (****535-9747-00****), #6-32 X 1/4" Phillips* ***FLAT HEAD*** *(PFH) 82° Undercut (Qty. 1) (237-5871-00)* ***and*** *#6-32 Nylon Stop Nut (Qty. 1) (240-5005-00)*		

Nr.	WIRE RAMP PARTS	QTY.	SPI PART Nr.
21	Wire Ramp (Left) *No Parts*	1	535-9518-00
	Item 21 is secured to Plastic -02 by: #8 Washer, .17" ID X 1/2" OD X 1/16" Thick (Qty. 1 above plastic) (242-5015-00), Washer, .187" ID X .875" OD X .048" Thick (Qty. 1) (242-5059-00), Item **23** & **24** *and its' securing hardware.* **and @ top by sliding into:** Wire Ramp (Left) Mounting Bracket Long (**535-9697-00**)		
22	Wire Ramp (Right) *No Parts*	1	535-9506-00
	Item 22 is secured to Plastic -04 by: #8 Washer, .17" ID X 1/2" OD X 1/16" Thick (Qty. 1 above plastic) (242-5015-00), Washer, .187" ID X .875" OD X .048" Thick (Qty. 1) (242-5059-00), Item **23** *and its' securing hardware.* **and @ top by sliding into:** Wire Ramp (RIght) Mounting Bracket Short (**535-9698-00**)		
23	1-1/16" 1-Groove Plastic Post (Clear)	2	550-5059-01
	Item 23 is secured by: Post Fasten #8-32 Top/ #6-32 Bottom (Qty. 1/per) (530-5008-00), #6-32 T-Nut (Qty. 1/pe) (240-5002-00) **and** #8-32 Nylon Stop Nut (Qty. 1/per) (240-5102-00)		
24	3/16" X 3/8" Plastic Spacer Gray	1	254-5000-02

▼ DISASSEMBLY FOR REPAIR PROCEDURE FOLLOWS THIS PAGE (100-102A-B) ▼

◀ Reference Pages 100-101 or Page 102 ▶ For Items & Part Numbers

Left & Right Ramp Removal as a single unit

Technicians Remember the Basics: *All Service should be done by qualified personnel.* ***ALWAYS REMOVE POWER BEFORE SERVICING****. Service assemblies which are above the playfield, with the playfield resting on the Support Slide Brackets (inclined lower position). When lowering, ensure playfield is pushed forward 'til the stop is felt, before lowering to ensure the Trough Popper Mechanism clears the Coin Mechanisms on the Coin Door. Re-assembly is the reverse of disassembly (removal). Keep track of securing hardware (which are referenced under the items in the Parts Table) Use* ***Loctite Blue 242*** *on the threads all screws to ensure the screws will not loosen in play.*

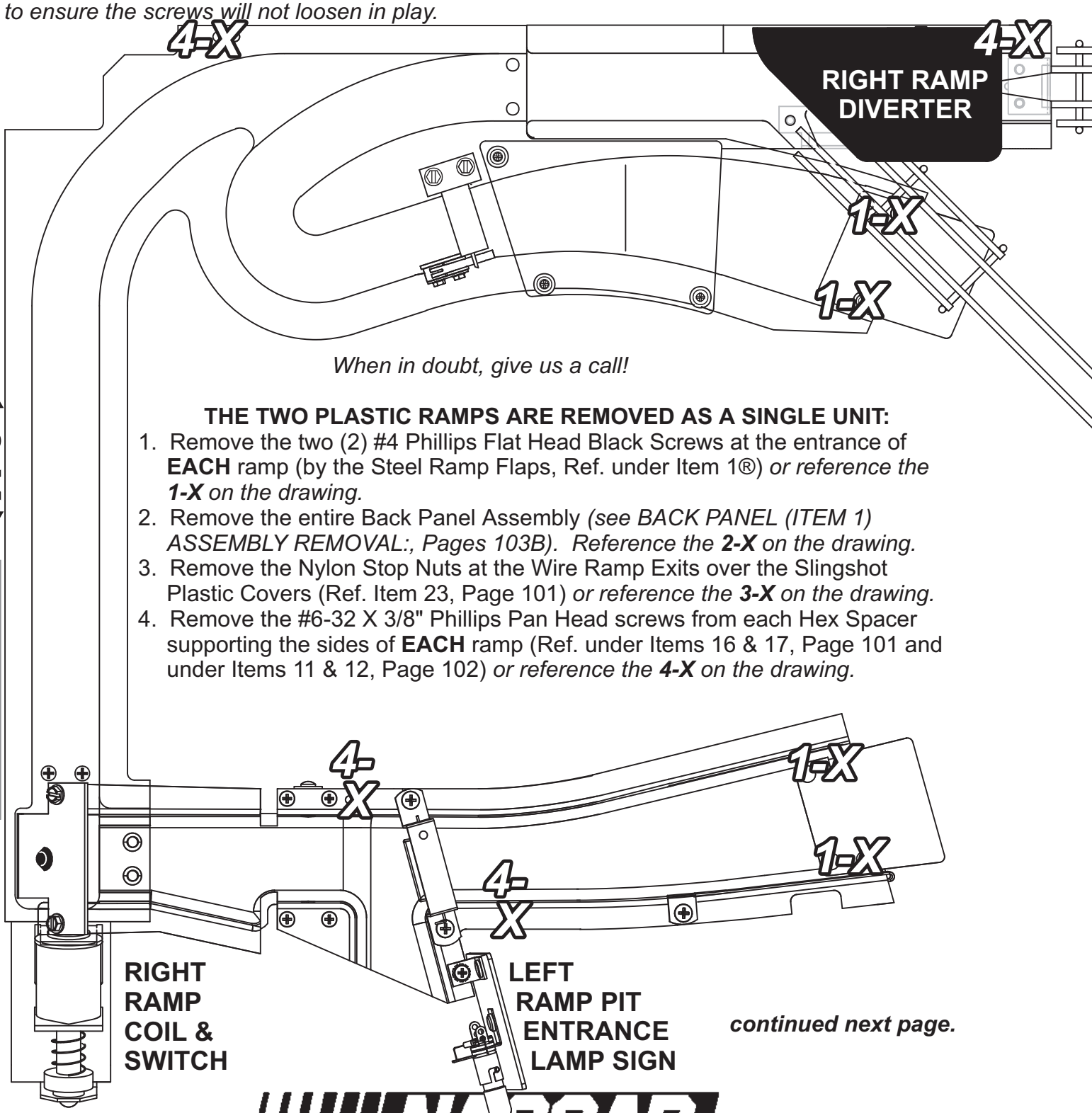

When in doubt, give us a call!

THE TWO PLASTIC RAMPS ARE REMOVED AS A SINGLE UNIT:

1. Remove the two (2) #4 Phillips Flat Head Black Screws at the entrance of **EACH** ramp (by the Steel Ramp Flaps, Ref. under Item 1®) *or reference the* ***1-X*** *on the drawing.*
2. Remove the entire Back Panel Assembly *(see BACK PANEL (ITEM 1) ASSEMBLY REMOVAL:, Pages 103B). Reference the* ***2-X*** *on the drawing.*
3. Remove the Nylon Stop Nuts at the Wire Ramp Exits over the Slingshot Plastic Covers (Ref. Item 23, Page 101) *or reference the* ***3-X*** *on the drawing.*
4. Remove the #6-32 X 3/8" Phillips Pan Head screws from each Hex Spacer supporting the sides of **EACH** ramp (Ref. under Items 16 & 17, Page 101 and under Items 11 & 12, Page 102) *or reference the* ***4-X*** *on the drawing.*

continued next page.

Left & Right Ramp Removal as a single unit Continued

5. Unplug the electrical connector for the rear of the Right Ramp Coil & Switch assembly.
6. Unplug the electrical connector for the Right Ramp Diverter assembly.
7. Unplug the electrical connector for the Left Ramp Pit Entrance Lamp Sign.
8. Remove the entire Plastic (Left & Right) Ramp and Wire Ramps from the game as one unit.

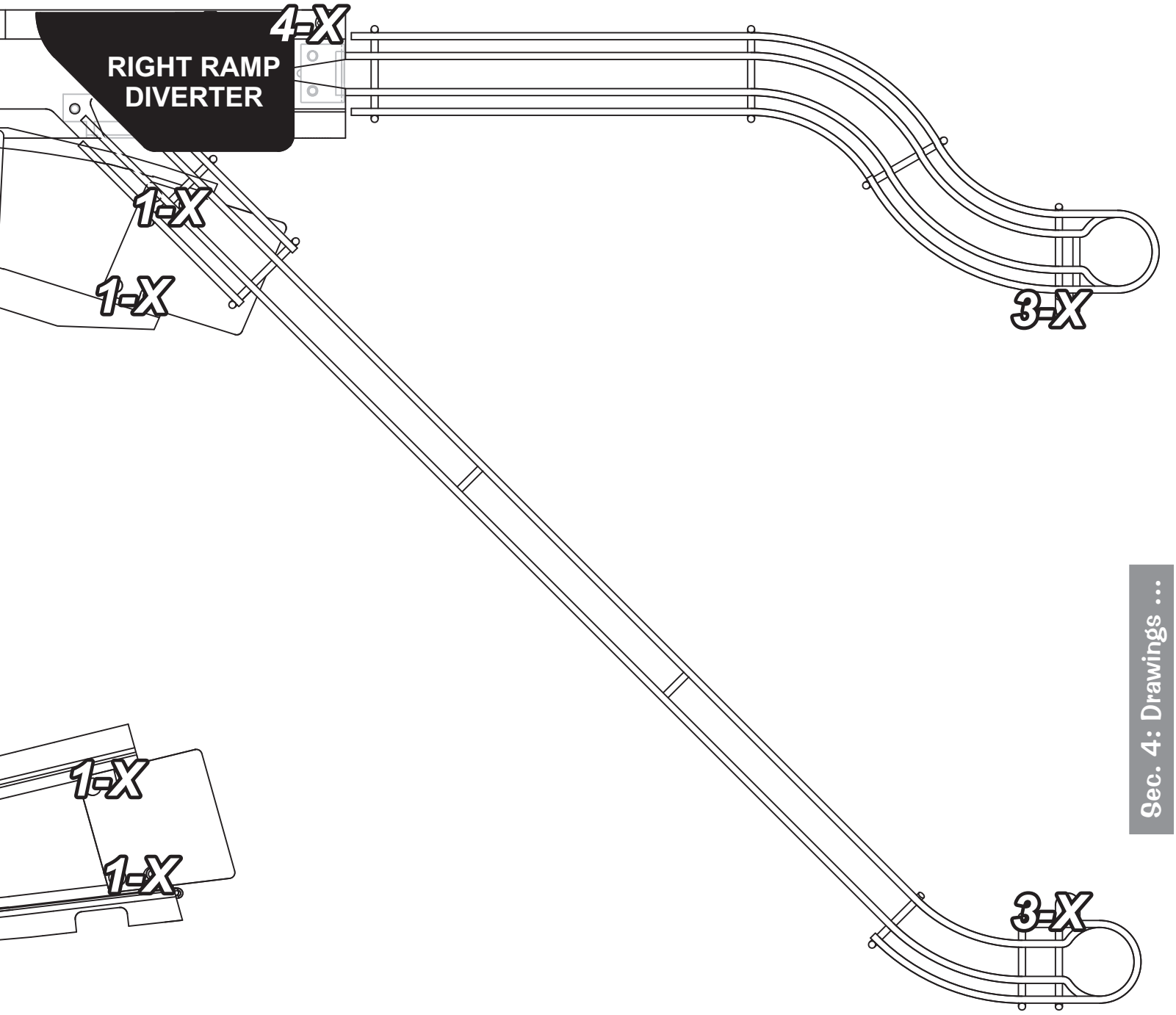

Left Plastic Ramp
Individual Parts Only (Items 1-14‡)

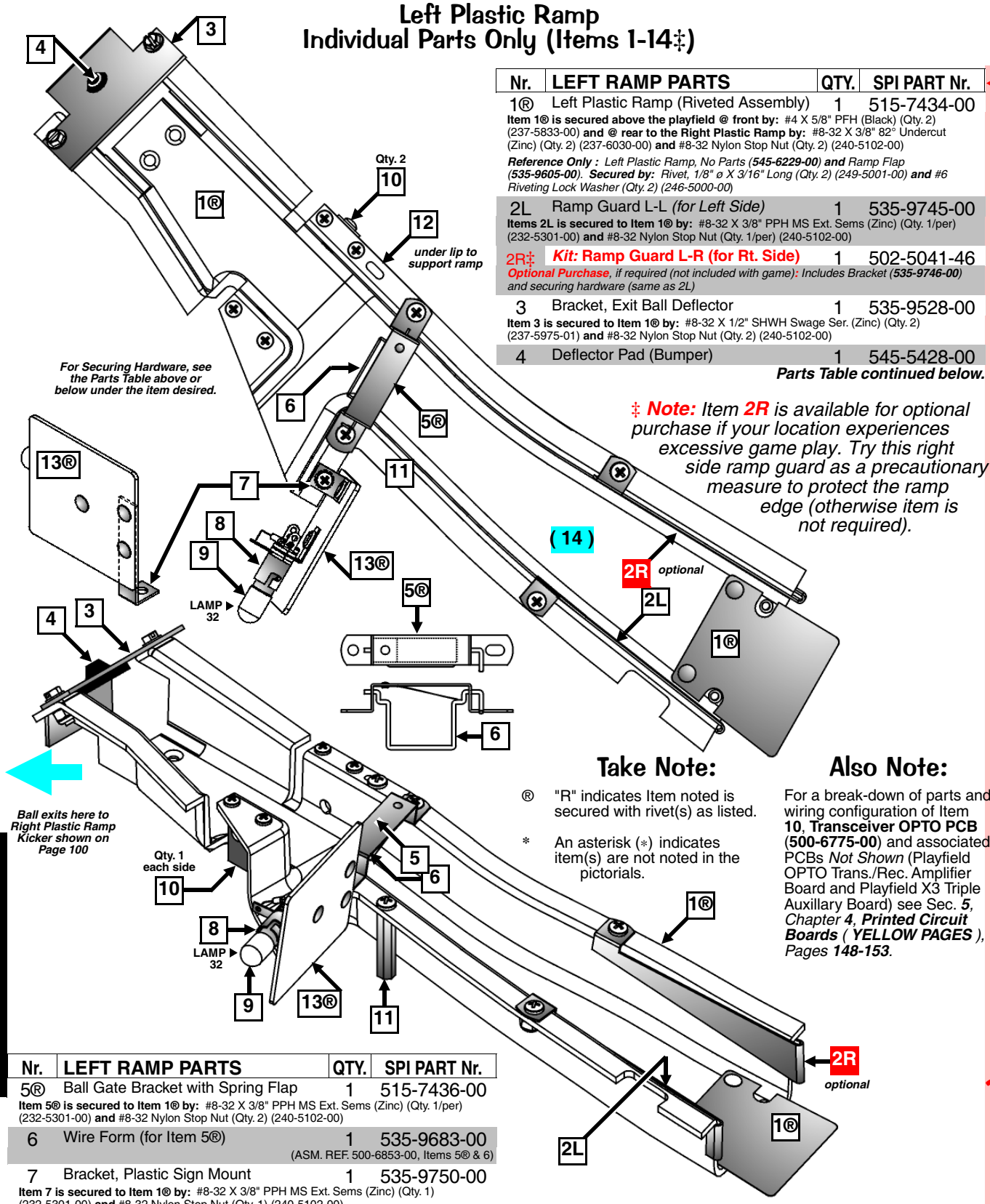

Nr.	LEFT RAMP PARTS	QTY.	SPI PART Nr.
1®	Left Plastic Ramp (Riveted Assembly)	1	515-7434-00
	Item 1® is secured above the playfield @ front by: #4 X 5/8" PFH (Black) (Qty. 2) (237-5833-00) **and @ rear to the Right Plastic Ramp by:** #8-32 X 3/8" 82° Undercut (Zinc) (Qty. 2) (237-6030-00) **and** #8-32 Nylon Stop Nut (Qty. 2) (240-5102-00)		
	Reference Only : *Left Plastic Ramp, No Parts* ***(545-6229-00) and*** *Ramp Flap* ***(535-9605-00)****.* ***Secured by:*** *Rivet, 1/8" ø X 3/16" Long (Qty. 2) (249-5001-00)* ***and*** *#6 Riveting Lock Washer (Qty. 2) (246-5000-00)*		
2L	Ramp Guard L-L *(for Left Side)*	1	535-9745-00
	Items 2L is secured to Item 1® by: #8-32 X 3/8" PPH MS Ext. Sems (Zinc) (Qty. 1/per) (232-5301-00) **and** #8-32 Nylon Stop Nut (Qty. 1/per) (240-5102-00)		
2R‡	***Kit:* Ramp Guard L-R (for Rt. Side)**	1	502-5041-46
	Optional Purchase*, if required (not included with game):* ***Includes Bracket (535-9746-00)*** *and securing hardware (same as 2L)*		
3	Bracket, Exit Ball Deflector	1	535-9528-00
	Item 3 is secured to Item 1® by: #8-32 X 1/2" SHWH Swage Ser. (Zinc) (Qty. 2) (237-5975-01) **and** #8-32 Nylon Stop Nut (Qty. 2) (240-5102-00)		
4	Deflector Pad (Bumper)	1	545-5428-00

Parts Table continued below.

‡ ***Note:*** *Item* ***2R*** *is available for optional purchase if your location experiences excessive game play. Try this right side ramp guard as a precautionary measure to protect the ramp edge (otherwise item is not required).*

Take Note:

® "R" indicates Item noted is secured with rivet(s) as listed.

* An asterisk (*) indicates item(s) are not noted in the pictorials.

Also Note:

For a break-down of parts and wiring configuration of Item **10**, **Transceiver OPTO PCB** (**500-6775-00**) and associated PCBs *Not Shown* (Playfield OPTO Trans./Rec. Amplifier Board and Playfield X3 Triple Auxillary Board) see Sec. ***5***, *Chapter* ***4***, ***Printed Circuit Boards*** *(* ***YELLOW PAGES*** *), Pages* ***148-153****.*

Nr.	LEFT RAMP PARTS	QTY.	SPI PART Nr.
5®	Ball Gate Bracket with Spring Flap	1	515-7436-00
	Item 5® is secured to Item 1® by: #8-32 X 3/8" PPH MS Ext. Sems (Zinc) (Qty. 1/per) (232-5301-00) **and** #8-32 Nylon Stop Nut (Qty. 2) (240-5102-00)		
6	Wire Form (for Item 5®)	1	535-9683-00
	(ASM. REF. 500-6853-00, Items 5® & 6)		
7	Bracket, Plastic Sign Mount	1	535-9750-00
	Item 7 is secured to Item 1® by: #8-32 X 3/8" PPH MS Ext. Sems (Zinc) (Qty. 1) (232-5301-00) **and** #8-32 Nylon Stop Nut (Qty. 1) (240-5102-00)		
8	3-Lug Laydown Socket (2 Lugs Bent)	1	077-5032-00
	Items 7 & 8 are secured to Item 13 by: Rivet, 1/8" ø X 1/4" Long (Qty. 3 total) (249-5003-00) **and** #6 Riveting Lock Washer (Qty. 3 total) (246-5000-00): *1/socket 2/bracket* Lamp has a Diode (1N4004) (112-5003-00). *Can be replaced with (1N4001) (112-5001-00).*		
9	#44 Bulb (Yellow)	1	165-5053-06
10	Transceiver OPTO PCB Assembly	2	500-6775-00
	Item 10 is secured to Item 1® by : #6 X 3/8" PPH AB (Zinc) (Qty. 2/per) (232-5000-01)		
	(ASM. REF. 500-6847-00, Items 1-10 Only, *without 13, 14 or 2L*)		

Nr.	LEFT RAMP PARTS	QTY.	SPI PART Nr.
11	Hex Spacer 7/8" X ¼" : #6-32 Tap		254-5008-05
12	Hex Spacer 2⅜" X ¼" : #6-32 Tap		254-5008-28
	Items 11 & 12 are secured by : #6-32 X 3/8" PPH Sems (Zinc) (Qty. 1/per) (232-5201-00)		
13®	***Kit:* Plastics** *(includes -22)*	1	803-5000-86
14*	***Kit:* Decals** *(includes 820-6366-00)*	1	802-5000-86
	Note: *Individual Plastics (830-6035-XX) & Decals are not available individually, ordering of kit is required. For all pieces, see* ***P/F Top - Plastics ... Kit, Decals & Mylar Kits****, Pg.* ***69****.*		

▼ DISASSEMBLY FOR REPAIR PROCEDURE PRECEDES THIS PAGE (100-102A-B) ▼

Back Panel and Motor (Rotating Car Target) Individual Parts Only (Items 1-18)

Nr.	BACK PANEL PARTS	QTY.	SPI PART Nr.
1	Back Panel (Black, Wood) *No Parts*	1	525-5642-00
	Item 1 is secured to Bracket, Back Panel Mounting (Left) (535-9645-00) and Bracket, Back Panel Mounting (Right) (535-9645-01) by: #8-32 X 3/4" SHWH Ser. Swage (Zc.) Wax (Qty. 2/per side) (237-5975-02) ***FOR BRACKET VIEWS**, see Section **4**, Chapter **2**, Page **64.*** **Both brackets are secured above the Playfield by:** #8-32 X 5/8" SHWH Ser. Swage (Zinc) Wax (Qty. 2/per) (237-5975-03) **and** #8-32 T-Nut (Qty. 2/per) (240-5101-00)		
2	Lg. Bayonet (2-Lug Stand-Up Short) Socket	1	077-5101-00
	Item 2 is secured to Item 1 by: 7/16" O.D. Rubber Ring Black (Qty. 1) (545-5348-17) **and** #6 X 1/2" SHWH (Qty. 1) (234-5001-02)		
3	#89 Bulb *Heavy Filament*	1	**165-5000-89-HF**
4	Mini-Mars Light Cover (Green)	1	550-5031-04
	Item 4 secured to Item 1 by : #6 X 3/8" SHWH (Qty. 2) (234-5000-00)		
5	Sm. Bayonet (2-Lug Staple Down) Socket	10	077-5000-00
	Item 5 secured by: Staples (5/16") onto Braided Wire (Qty. 3) (600-5003-00 per 1 Ft.) ***Item 5 Note:** Sockets do not require diodes (they are used for **General Illumination**, see **Playfield Wiring**, Section **5**, Chapter **2**, Page **109**).*		
6	#44 Bulb (Clear) *Heavy Filament* G.I.	6	**165-5000-44-HF**
7	#44 Bulb (Yellow) Gen. Illumination	4	165-5053-06
8	1-1/16" 1-Groove Plastic Post (Clear)	1	550-5059-01
	Item 8 is secured to Item 1 by: #6 X 1-1/2" PPH (Zinc) (Qty. 1) (232-5007-00)		
9	OPTO Transmitter/Rec. Amplifier PCB	1	520-5239-01
	Item 9 secured to Item 1 by : #6 X 3/4" SHWH AB (Zinc) (Qty. 4) (234-5003-00)		

Nr.	BACK PANEL PARTS	QTY.	SPI PART Nr.
10	Motor Mounting Bracket	1	535-9526-00
	Item 11 is secured to Item 1 by: #8-32 X 5/8" SHWH Ser. Swage (Zinc) Wax (Qty. 4) (237-5975-03) **and** #8-32 T-Nut (Qty. 4) (240-5101-00)		
11	Motor, 10 RPM @ 20V DC	1	041-5093-00
	Motor Specs : Multi-Products Model #8000 DC Motor has a Diode (1N4004) (112-5003-00) located on lugs *(rear) with* #18 Insulating Tubing (Qty. .13') (605-5003-00) **and is secured to Item 10 by:** 3/16" X 3/8" Plastic Spacer (Qty. 4) (254-5000-18) **and** #8-32 X 1" SHWH MX (Zinc) (Qty. 4) (237-6003-00)		
12	Washer (.311" ID X 1" OD X .075")	1	242-5086-00
13	Impact Plate ("Windmill" Target)	1	535-9527-00
14	WV Spring 3/8" (Smalley C050-L1)	1	269-5006-00
	Items 13 & 14 are secured to Item 11 by: #8-32 X 1/2" SHWH Ser. Swage (Zinc) Wax (Qty. 4) (237-5975-01) **and** #8 Washer (.17" ID X 1/2" OD X .042") (Qty. 1) (242-5015-00)		
15	Transceiver OPTO PCB Assembly	2	500-6775-00
	Item 15 secured to Item 10 by : #6 X 3/8" PPH (Zc.) TYPE -25 (Qty. 2/per) (237-5880-00) (ASM. REF. 500-6844-00, Items 1-15 *without 16® or 17*) (ASM. REF. 500-6838-00, Items 11-15 Only, *without 16®*)		
16®*	***Kit:* Plastics** *(includes -31, -32 & -33)*	1	803-5000-86
17	***Kit:* Decals** *(Includes -25, -43 & -44)*	1	802-5000-86
	***Note:** Individual Plastics (830-6036-XX) & Decals (820-6371-XX) are not available individually, ordering of kit is required. For views of 16® assembled and all other pieces, see **Playfield Top - Plastics (Screened & Clear) Kit, Decals & Mylar Kits, Page 69**.*		
18	Plate, Left Ramp Retention	1	535-9755-00
	Item 18 secured to Item 1 by : #6 X 1/2" SHWH AB (Zinc) Red (Qty. 2) (234-5001-00)		

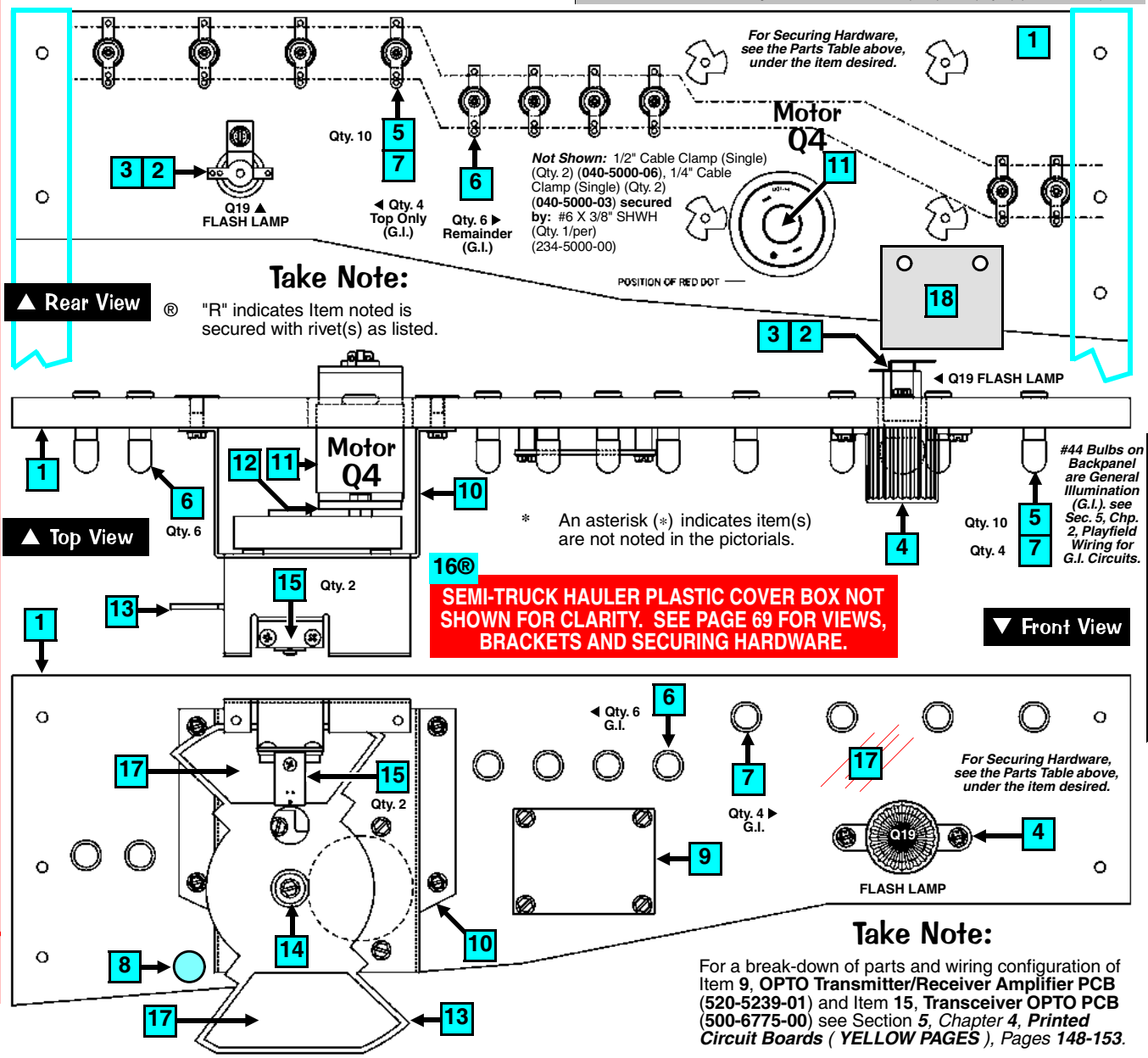

Take Note:

For a break-down of parts and wiring configuration of Item **9**, **OPTO Transmitter/Receiver Amplifier PCB** (**520-5239-01**) and Item **15**, **Transceiver OPTO PCB** (**500-6775-00**) see Section ***5***, *Chapter **4**, **Printed Circuit Boards** (**YELLOW PAGES**), Pages **148-153**.*

◀ Reference Page 103 For Items & Part Numbers

Rotating Wheel Target & Back Panel Disassembly For Repair

Technicians Remember the Basics: *All Service should be done by qualified personnel.* ***ALWAYS REMOVE POWER BEFORE SERVICING****. Service assemblies which are above the playfield, with the playfield resting on the Support Slide Brackets (inclined lower position). When lowering, ensure playfield is pushed forward 'til the stop is felt, before lowering to ensure the Trough Popper Mechanism clears the Coin Mechanisms on the Coin Door. Re-assembly is the reverse of disassembly (removal). Keep track of securing hardware (which are referenced under the items in the Parts Table) Use* ***Loctite Blue 242*** *on the threads all screws to ensure the screws will not loosen in play.*

When in doubt, give us a call!

COMPLETE MOTOR (ITEMS 11-15) ASSEMBLY REMOVAL:

1. Remove the two (2) front Hex Washer Head screws that hold the Screened Plastic (Semi-Truck) Hauler facade (not shown) to the Main Motor Mounting Bracket (Item 10) *or reference the* ***X****s on the next page drawing.*
2. Unclip the wires that are held to the backside of the facade (behind/inside) from the Ramp OPTOs.
3. Lay the facade as much out of the way as possible.
4. Remove the two (2) OPTO Connectors from the motor OPTOs at the OPTO Board on the Front of the Back Panel. *Note the decals reference which Connector to reconnect to.*
5. Disconnect the motor power connector *(located behind the Back Panel near the motor).*
6. Remove the four (4) screws (Ref. under Item 10) that secures the Motor Mounting Bracket (Item 10) to the Back Panel.
7. Remove the entire assembly from the game for servicing.

REMOVE WHEEL (IMPACT PLATE, ITEM 13) FROM THE MOTOR ASSEMBLY:

1. Remove the two (2) front Hex Washer Head screws that hold the Screened Plastic (Semi-Truck) Hauler facade (not shown) to the Main Motor Mounting Bracket (Item 10) *or reference the* ***X****s on the next page drawing.*
2. Unclip the wires that are held to the backside of the facade (behind/inside) from the Ramp OPTOs.
3. Lay the facade as much out of the way as possible.
4. Remove the two (2) screws that hold the front motor OPTO (Ref. Item 15) in place and set the OPTO aside.
5. Remove the screw that holds the wheel (Impact Plate, Item 13) to the motor (center, Ref. Item 14).

   >> CAUTION! Make sure to **KEEP** the Washer (Ref. under Item 14) which retains the Wave Washer (WV Spring, Item 14) that are just under the screw. **<< CAUTION!**

THE WAVE WASHER SPRING is a SAFETY ITEM that ensures that the Impact Plate will slip in the event it makes contact with any solid object while the motor is turning.

6. Remove the Wheel (Impact Plate).

REMOVE THE MOTOR & GEAR BOX FROM THE MOTOR MOUNTING BRACKET:

1. Follow **COMPLETE MOTOR (ITEMS 11-15) ASSEMBLY REMOVAL:** above.
2. Note the four (4) spacers between the Motor Gear box on the inside of the Motor Mounting Bracket. These spacers are what position the Impact Plate (wheel) to clear the open space in the Left Ramp. *As parts may differ in future productions, these spacers may not exist. Rule of thumb, replace the same items you remove into the same position.*

continued next page.

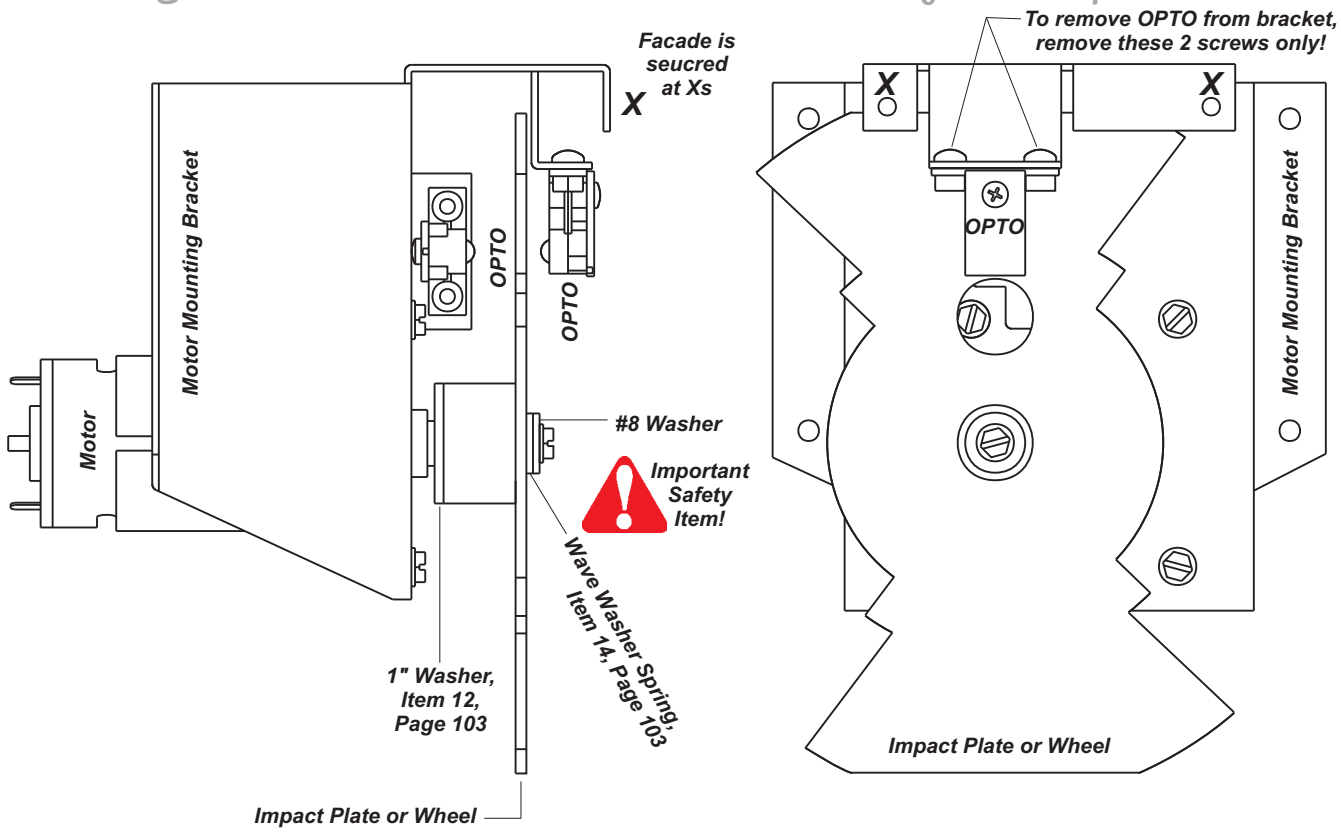

THE WAVE WASHER SPRING is a SAFETY ITEM that ensures that the Impact Plate will slip in the event it makes contact with any solid object while the motor is turning.

BACK PANEL (ITEM 1) ASSEMBLY REMOVAL:

1. Remove the two (2) front Hex Washer Head screws that hold the Screened Plastic (Semi-Truck) Hauler facade to the Main Motor Mounting Bracket (Item 10) *or reference the **X**s.*
2. Unclip the wires that are held to the backside of the facade (behind/inside) from the Ramp OPTOs.
3. Lay the facade as much out of the way as possible.
4. Remove the two (2) OPTO Connectors from the motor OPTOs at the OPTO Board on the Front of the Back Panel. *Note the decals reference which Connector to reconnect to.*
5. Reach behind the Back Panel and unplug the main Back Panel electrical connector from its' Z-Header. At the same time, unplug the main Back Panel Switch connector.
6. Remove the four (4) screws that hold the Back Panel to its' Support Brackets (Ref. under Item 1) and remove the entire assembly from the game.

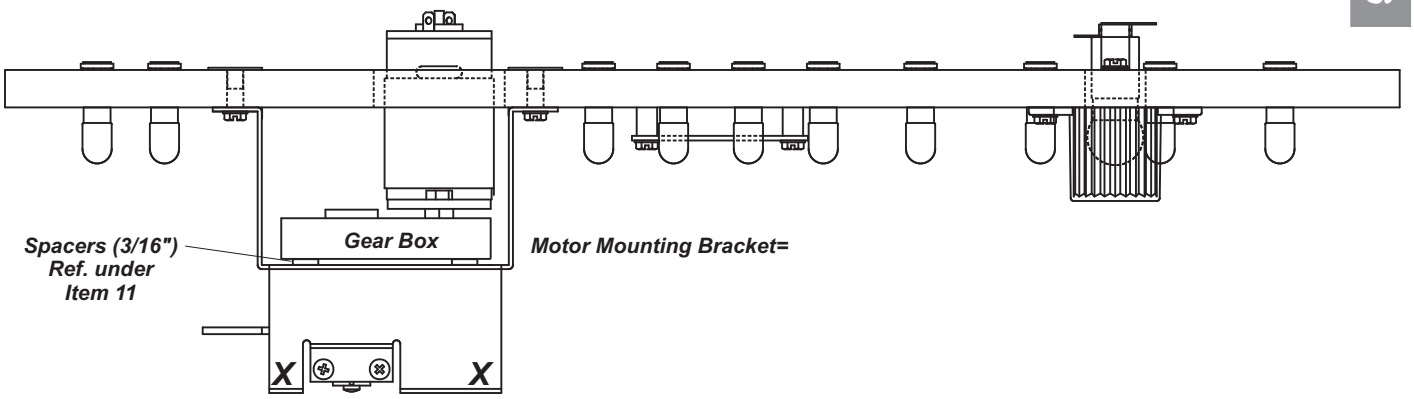

UK ONLY OPTIONAL

Ball Deflector Assemblies, 500-5788-02 (Qty. 2) (Items 1-8)

Nr.	BALL DEFLECTOR PARTS	QTY.	SPI PART Nr.
1	Ball Deflector Coil Mounting Bracket	1	535-6857-02
	Item 1 is secured below the playfield by: #8 X 1/2" SHWH AB (Zc.) (Qty. 4) (234-5101-00)		
2	Coil Retaining Bracket	1	535-5203-03
	Item 2 is secured by: #8-32 X 1/4" PPH MS (Sems) Zinc (Qty. 2) (232-5300-00)		
3	Spring Washer (17/32" ID X 3/4" X 1")	1	269-5002-00
4	Coil, 26-1200	1	090-5044-00T
	Coil has a Diode (1N4004) (112-5003-00) positioned @ top (above lugs next to windings).		
5	Coil Sleeve (Short) (Formost #10-7077)	1	545-5076-01
6	Steel & Nylon Plunger Assembly	1	515-6858-00
7	Compression (Relay) Spring	1	266-5022-01
8	#10-32 Adj. Spindle Stop w/Rubber Tip	1	280-5014-00
	Item 8 is secured by: #10-32 Keps Nut (Qty. 1) (240-5208-00)		

Ordering Note: *If **500-5788-02** is unavailable*, order the individual part(s) actually required.

Take Note:

↻ **Coil Note:** ↻ Either -00**B** *or* -00**T** can be used for coil replacements. *B/T listed is preferable for easier diode access and may differ on game.*

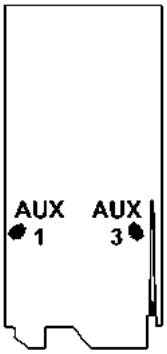

Top View

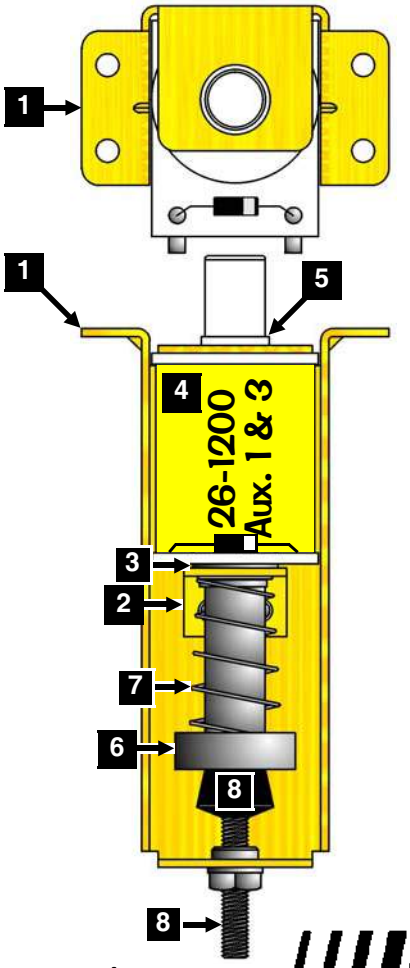

UK ONLY OPTIONAL

Up/Down Post Assy., 500-6293-00 (Items 1-9)

Nr.	UP/DOWN POST PARTS	QTY.	SPI PART Nr.
1	Up/Down Post Coil Mounting Bracket	1	515-6840-00
	Item 1 is secured below the playfield by: #8 X 1/2" SHWH AB (Zc.) (Qty. 6) (234-5101-00)		
2	Coil Retaining Bracket	2	535-7356-00
	Items 2 & 3 are secured by: #8-32 X 3/8" Swage (Serr) Zinc (Qty. 2/per) (237-5975-00)		
3	Spring Washer, 17/32" ID X 3/4" X 1"	1	269-5002-00
4	Coil, 23-1100 (ORG)	1	090-5030-00T
	Coil has a Diode (1N4004) (112-5003-00) positioned @ top (above lugs next to windings).		
5	Coil Sleeve (with extension)	1	545-5847-00
6	Ball Bumper, Plunger & Shaft Assy.	1	515-6844-00
	For Individual Items use : Ball Bumper Plastic (Top) Red (**550-5029-02**), Plunger & Shaft *Only* (**515-6841-00**), Plunger Head *(detachable)* (**530-5511-00**), #10-32 X 3/8" PPH MS (Sems) Zinc *(secures Plunger Head to Shaft)* (232-5401-00), Roll Pin 3/32" ø x 1/2" Long (**251-5002-00**) **and** Retaining Ring, 1/4" ø Shaft (**270-5002-00**)		
	Ordering Note: *If* **515-6844-00** *is unavailable*, order the individual part(s) actually required.		
7	Compression (Relay) Spring	1	266-5022-01
8	#10-32 Adj. Spindle Stop w/Rubber Tip	1	280-5014-00
	Item 9 is secured by: #10-32 Keps Nut (Qty. 1) (240-5208-00)		
9	Adjustment Spindle Stop Bracket	1	535-8303-00
	Ordering Note: *If **500-6293-00** is unavailable*, order the individual part(s) actually required.		

Take Note:

↻ **Coil Note:** ↻ Either -00**B** *or* -00**T** can be used for coil replacements. *B/T listed is preferable for easier diode access and may differ on game.*

Top View

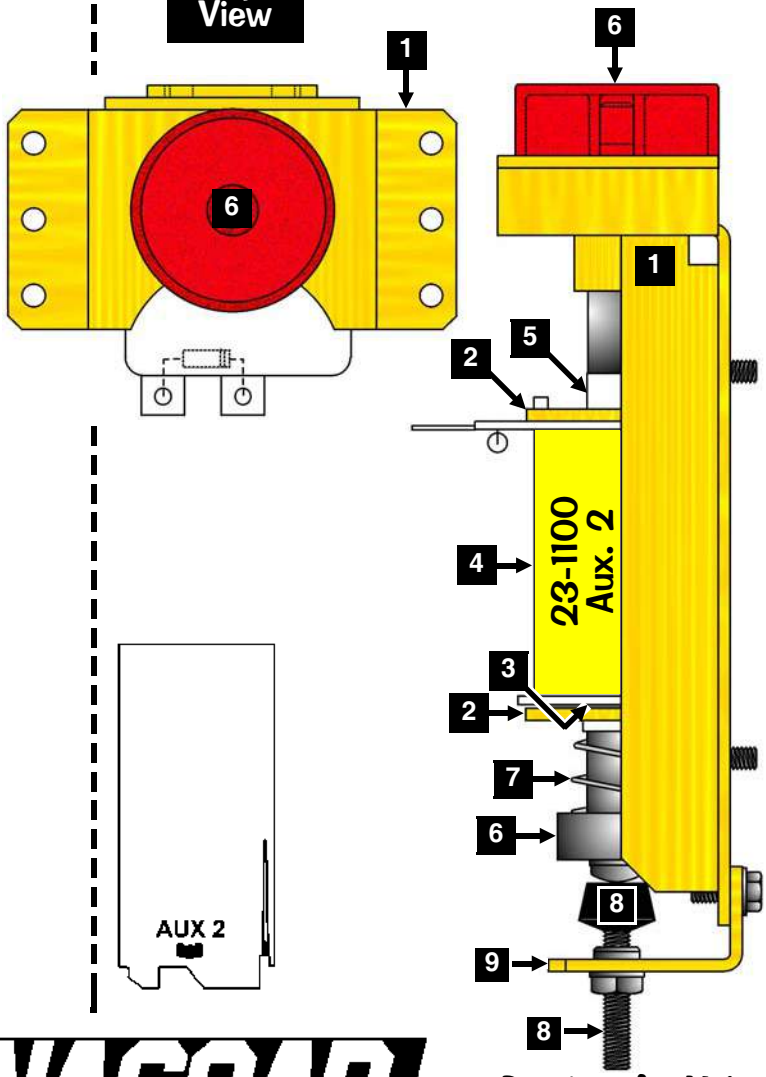

Schematics, Wiring & PCBs

Table of Contents

- **Chapter 1, Backbox Wiring 106**
  - COILS DETAILED CHART TABLE 106
  - Backbox I/O Power Driver Board Detailed Wiring Diagram 107
  - Backbox Board Layout Wiring Diagram 108
- **Chapter 2, Playfield Wiring 109**
  - General Illumination Circuit Detailed Wiring Diagram 109
  - Playfield Switch Wiring Diagram & Playfield Lamp Wiring Diagram 110
  - Playfield Terminal Strips, Fuses & Misc. Wiring Descriptions & Locations 111
  - 2-Flipper Circuit Wiring Diagram 112
- **Chapter 3, Cabinet Wiring 113**
  - Transformer Power Wiring Diagram 113
  - Cabinet / Coin Door Wiring Diagram 114
- **Chapter 4, Printed Circuit Boards (PCBs) 115**
  - Trough Up-Kicker Dual OPTO Boards Theory of Operation & Schematic ..... (Top) 115
  - Trough Up-Kicker Dual OPTO Boards Component Layout & Parts ..... (Bot) 115
  - OPTO Troubleshooting ..... (Top) 116
  - Trough Dual OPTO Boards Alignment / Tests for LED1 & LED2 116-117
  - Dot Matrix Display / Display Controller Bd. Combined Display Connections 118
  - Display Power Supply Board Schematic, Component Layout & Parts 119
  - Display Controller Board Schematic 120-121
  - Display Controller Board Component Layout & Parts 122
  - I/O Power Driver Board Theory of Operation 123
  - I/O Power Driver Board Schematic *(Sheet 1 of 5 — 5 of 5)* 124-133
  - I/O Power Driver Board Component Layout 134
  - I/O Power Driver Board Parts 135
  - CPU/Sound Board II *(with ATMEL Processor)* Theory of Operation 137
  - CPU/Sound Board II *(with ATMEL Processor)* Schematic *(Sheet 1 of 4 — 4 of 4)* 138-145
  - CPU/Sound Board II *(with ATMEL Processor)* Component Layout 146
  - CPU/Sound Board II *(with ATMEL Processor)* Parts 147
  - Playfield Switches OPTO Transceiver Bd. Schematic, Component Layout & Parts ..... (Top) 148
  - Playfield OPTO Transmitter / Receiver Amplifier Board Schematic ..... (Bot) 148
  - P/F OPTO Transmitter / Receiver Amplifier Board Component Layout & Parts ..... (Top) 149
  - P/F OPTO Transmitter / Receiver Amplifier Board Wiring Configuration #1 ..... (Bot) 149
  - P/F OPTO Transmitter / Receiver Amplifier Board Wiring Configuration #2 ..... (Top) 150
  - P/F OPTO Transmitter / Receiver Amplifier Board Wiring Configuration #3 ..... (Bot) 150
  - P/F OPTO Transmitter / Receiver Amplifier Board Wiring Configuration #4 ..... (Top) 151
  - P/F OPTO Transmitter / Receiver Amplifier Board Wiring Configuration #5 ..... (Bot) 151
  - Playfield X3 *(Triple)* Driver Board Schematic 152
  - Playfield X3 *(Triple)* Driver Board Component Layout & Wiring 153
  - UK & Special App. 3X Transistor Driver Bd. Schematic & Component Layout 154
  - UK 3X Transistor Driver Bd. for Up-Posts & P/F Dot Display or LED Sign *(if used)* 155
  - UK 3X Trans. Driver Board ... with the Tournament Serial Interface (TSI) Board 156
  - Aux. 3X Trans. Driver Board ... with the TSI Board and Ticket Interface 157
  - Tournament Serial Interface Board Schematic *(Sheet 1 of 1)* 158-159
  - Tournament Serial Interface Board Component Layout 160

Visit **www.SternPinball.com/schematics.htm** for the latest 11" X 17" Schematics (or "Split 8-1/2" X 11") for the **Display Power Supply, Display Controller, I/O Power Driver & CPU/Sound Boards** (White Star™ System Only). Along with the schematics you'll find the component layout and theory of operation. Keep visiting as these files are continuously improved with more search links in the documents. The files are in PDF format (Adobe® Reader required). They may be slow to open in the website only, but once on your hardrive they load fast. Inside the schematics you can use the mouse to click on a link which will take you to a another sheet in the schematic set (further instructions within documents). To "download" once open, in your browser click "File" "Send" "Page by eMail". It will be sent to your eMail Address, where there you can save the file to your hardrive.

All 11 X 17 Schematics and other PDF files are also available on CD-ROM.

Use the below ***Coils Detailed Chart Table*** in conjunction with *Sec. **5**, Chp. **1**, Backbox I/O Power Driver Board Detailed Wiring Diagram (I/O Board Connectors J6, J7, J8 & J9) and Backbox Board Layout Wiring Diagram:*

COILS DETAILED CHART TABLE

	High Current Coils Group 1	Drive Transistor	Driver Ouput Board	Power Line Color	Power Line Connection	Power Voltage	Drive Transistor Control Line Color	D.T. Control Line Connect	Coil GA-Turn or Bulb Type
#1	TROUGH UP-KICKER	Q1	▲ I/O Power Driver ▼	YEL-VIO	J10-P4/5	50v DC	BRN-BLK	J8-P1	26-1200 ↻ 090-5044-00T
#2	AUTO LAUNCH	Q2		YEL-VIO	J10-P4/5	50v DC	BRN-RED	J8-P3	24-940 ↻ 090-5036-00B
#3	TRUCK RAMP KICKER	Q3		YEL-VIO	J10-P4/5	50v DC	BRN-ORG	J8-P4	23-800 ↻ 090-5001-00B
#4	TRUCK MOTOR DRIVE (20V)	Q4		BROWN	J7-P1	20v DC	BRN-YEL	J8-P5	Motor 20v 041-5093-00
#5	GARAGE RELEASE	Q5		YEL-VIO	J10-P4/5	50v DC	BRN-GRN	J8-P6	23-800 ↻ 090-5001-00T
#6	GARAGE KICKER	Q6		YEL-VIO	J10-P4/5	50v DC	BRN-BLU	J8-P7	23-800 ↻ 090-5001-00T
#7	TRACK EXIT POPPER	Q7		YEL-VIO	J10-P4/5	50v DC	BRN-VIO	J8-P8	23-800 ↻ 090-5001-00T
#8	MIDWAY EJECT	Q8		YEL-VIO	J10-P4/5	50v DC	BRN-GRY	J8-P9	26-1200 ↻ 090-5044-00T

	High Current Coils Group 2	Drive Transistor	Driver Ouput Board	Power Line Color	Power Line Connection	Power Voltage	Drive Transistor Control Line Color	D.T. Control Line Connect	Coil GA-Turn or Bulb Type
#9	LEFT BUMPER	Q9	▲ I/O Power Driver ▼	YEL-VIO	J10-P4/5	50v DC	BLU-BRN	J9-P1	26-1200 ↻ 090-5044-00T
#10	RIGHT BUMPER	Q10		YEL-VIO	J10-P4/5	50v DC	BLU-RED	J9-P2	26-1200 ↻ 090-5044-00T
#11	BOTTOM BUMPER DOTS	Q11		YEL-VIO	J10-P4/5	50v DC	BLU-ORG	J9-P4	26-1200 ↻ 090-5044-NL
#12	3 BANK DROP TARGET RESET	Q12		YEL-VIO	J10-P4/5	50v DC	BLU-YEL	J9-P5	25-1240 ↻ 090-5034-00B
#13	RIGHT RAMP DIVERTER	Q13		YEL-VIO	J10-P4/5	50v DC	BLU-GRN	J9-P6	32-1800 ↻ 090-5031-00
#14	GARAGE RAISE	Q14		YEL-VIO	J10-P4/5	50v DC	GRY-GRN~3A Fuse~BLU-BLK	J9-P7	22-1080 ↻ 090-5032-00T
#15	LEFT FLIPPER (50v RED/YEL)	Q15		GRY-YEL~3A Fuse~RED-YEL	J10-P1/2	50v DC	ORG-GRY	J9-P8	23-1100 ↻ 090-5030-00T
#16	RIGHT FLIPPER (50v RED/YEL)	Q16		BLU-YEL~3A Fuse~RED-YEL	J10-P1/2	50v DC	ORG-VIO	J9-P9	23-1100 ↻ 090-5030-00T

	Low Current Coils Group 1	Drive Transistor	Driver Ouput Board	Power Line Color	Power Line Connection	Power Voltage	Drive Transistor Control Line Color	D.T. Control Line Connect	Coil GA-Turn or Bulb Type
#17	LEFT SLINGSHOT	Q17	▲ I/O Power Driver ▼	BROWN	J7-P1	20v DC	VIO-BRN	J7-P2	23-800 ↻ 090-5001-00T
#18	RIGHT SLINGSHOT	Q18		BROWN	J7-P1	20v DC	VIO-RED	J7-P3	23-800 ↻ 090-5001-00T
#19	FLASH: UPR RIGHT (BACK PNL)	Q19		ORANGE	J6-P10	20v DC	VIO-ORG	J7-P4	#89 Bulb 165-5000-89
#20	UPR ACCELERATOR MAG (AUX)	Q20		VIO-RED~Triple Aux~VIO-YEL	J2-P3~Triple Aux~J10-P3	50v DC	ORG~Triple Aux~VIO-YEL	J2-P7~Trp. Aux~J7-P6	22-700 ↻ 090-5071-00
#21	RIGHT TRACK EXIT DIVERTER	Q21		BROWN	J7-P1	20v DC	VIO-GRN	J7-P7	26-1200 ↻ 090-5044-00T
#22	LEFT TRACK EXIT DIVERTER	Q22		BROWN	J7-P1	20v DC	VIO-BLU	J7-P8	26-1200 ↻ 090-5044-00T
#23	INNER ORBIT POST	Q23		BROWN	J7-P1	20v DC	VIO-BLK	J7-P9	26-1200 ↻ 090-5044-00T
#24	OPTIONAL COIL	Q24		RED	J16-P7	5v DC	VIO-GRY	J7-P10	Opt. 5v

Diode **O**n **T**erminal **S**trip (if noted)

	Low Current Coils Group 2	Drive Transistor	Driver Ouput Board	Power Line Color	Power Line Connection	Power Voltage	Drive Transistor Control Line Color	D.T. Control Line Connect	Coil GA-Turn or Bulb Type
#25	LWR ACCLRTR MAG LT (AUX)	Q25	▲ I/O Power Driver ▼	VIO-RED~Triple Aux~VIO-YEL	J2-P1~Triple Aux~J10-P3	50v DC	ORG-BRN~Triple Aux~BLK-BRN	J2-P5~Triple Aux~J6-P1	22-700 ↻ 090-5071-00
#26	LWR ACCLRTR MAG RT (AUX)	Q26		VIO-RED~Triple Aux~VIO-YEL	J2-P2~Triple Aux~J10-P3	50v DC	ORG-RED~Triple Aux~BLK-RED	J2-P6~Triple Aux.~J6-P2	22-700 ↻ 090-5071-00
#27	PIT LOCK RELEASE LEFT	Q27		BROWN	J7-P1	20v DC	BLK-ORG	J6-P3	26-1200 ↻ 090-5044-00T
#28	PIT LOCK RELEASE RIGHT	Q28		BROWN	J7-P1	20v DC	BLK-YEL	J6-P4	26-1200 ↻ 090-5044-00T
#29	MIDWAY SIGN (HOT DOG)	Q29		BROWN	J7-P1	20v DC	BLK-GRN	J6-P5	32-1800 ↻ 090-5031-00
#30	FLASH: LEFT (X3)	Q30		ORANGE	J6-P10	20v DC	BLK-BLU	J6-P6	#89 Bulb 165-5000-89
#31	FLASH: RIGHT (X3)	Q31		ORANGE	J6-P10	20v DC	BLK-VIO	J6-P7	#89 Bulb 165-5000-89
#32	FLASH: TEST CAR (X2)	Q32		ORANGE	J6-P10	20v DC	BLK-GRY	J6-P8	#89 Bulb 165-5000-89

Note: In Test Flash Lamps Menu ("Flash" Icon), Flashers tested are all Flash Lamps located between Q1-Q32 (This Game: Q19, Q30-Q32)

	Auxiliary (UK ONLY)	Drive Transistor	Driver Ouput Board	Power Line Color	Power Line Connection	Power Voltage	Drive Transistor Control Line Color	D.T. Control Line Connect	Coil GA-Turn
	AUX 1: LEFT UP/DOWN POST	Q1	UK 3X Trans. Driver Board	BROWN	J7-P1	20v DC	WHITE	J2-P3	26-1200 ↻ 090-5044-00T
	AUX 2: CENTER UP/DOWN POST	Q2		BROWN	J7-P1	20v DC	RED	J2-P4	23-1100 ↻ 090-5030-00T
	AUX 3: RIGHT UP/DOWN POST	Q3		BROWN	J7-P1	20v DC	ORANGE	J2-P7	26-1200 ↻ 090-5044-00T

↻ **Coil Note:** ↻ Either -00**B** *or* -00**T** can be used for coil replacements. *B/T listed is preferable for easier diode access & may differ on game.*

Backbox I/O Power Driver Board Detailed Wiring Diagram

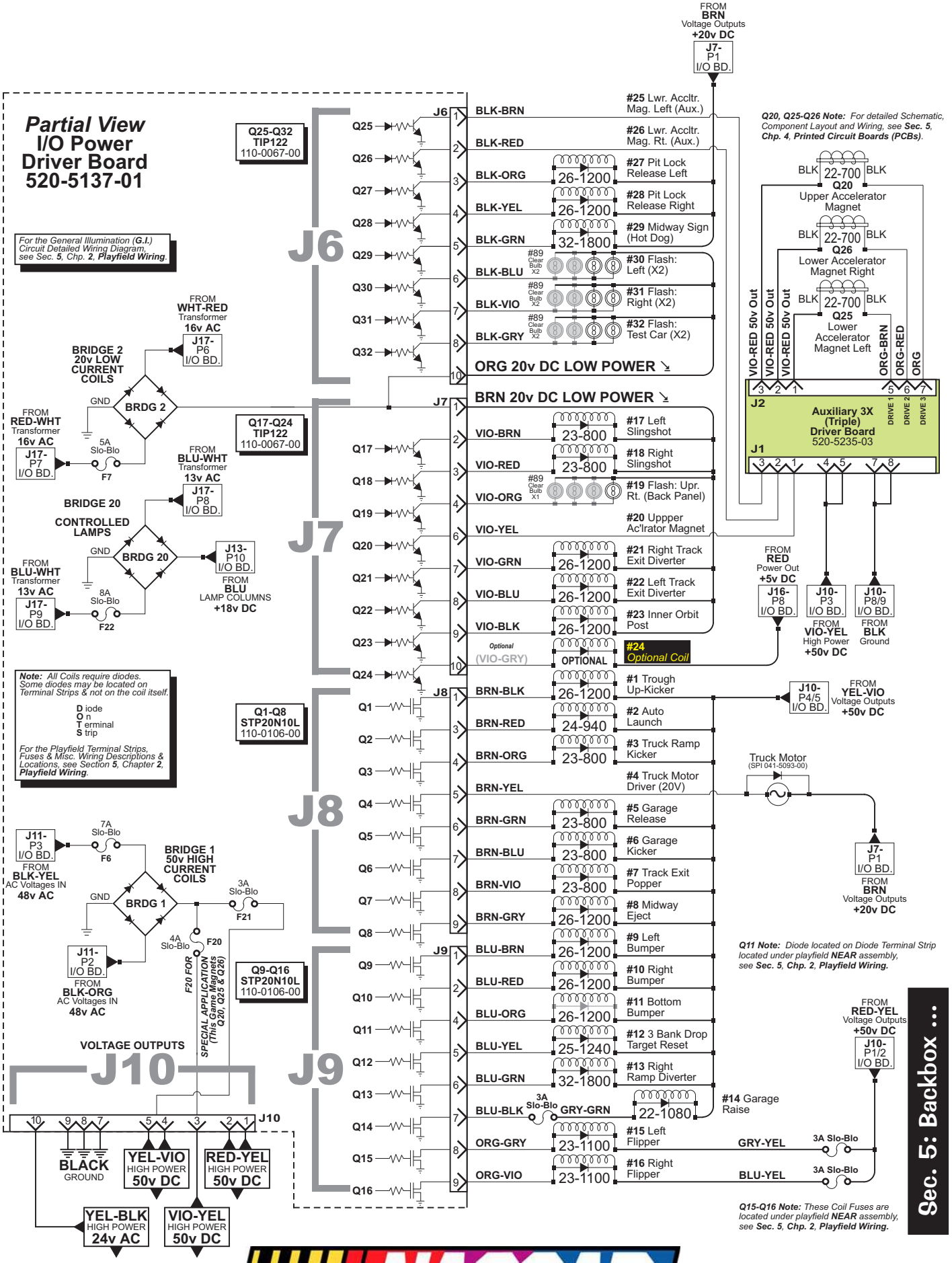

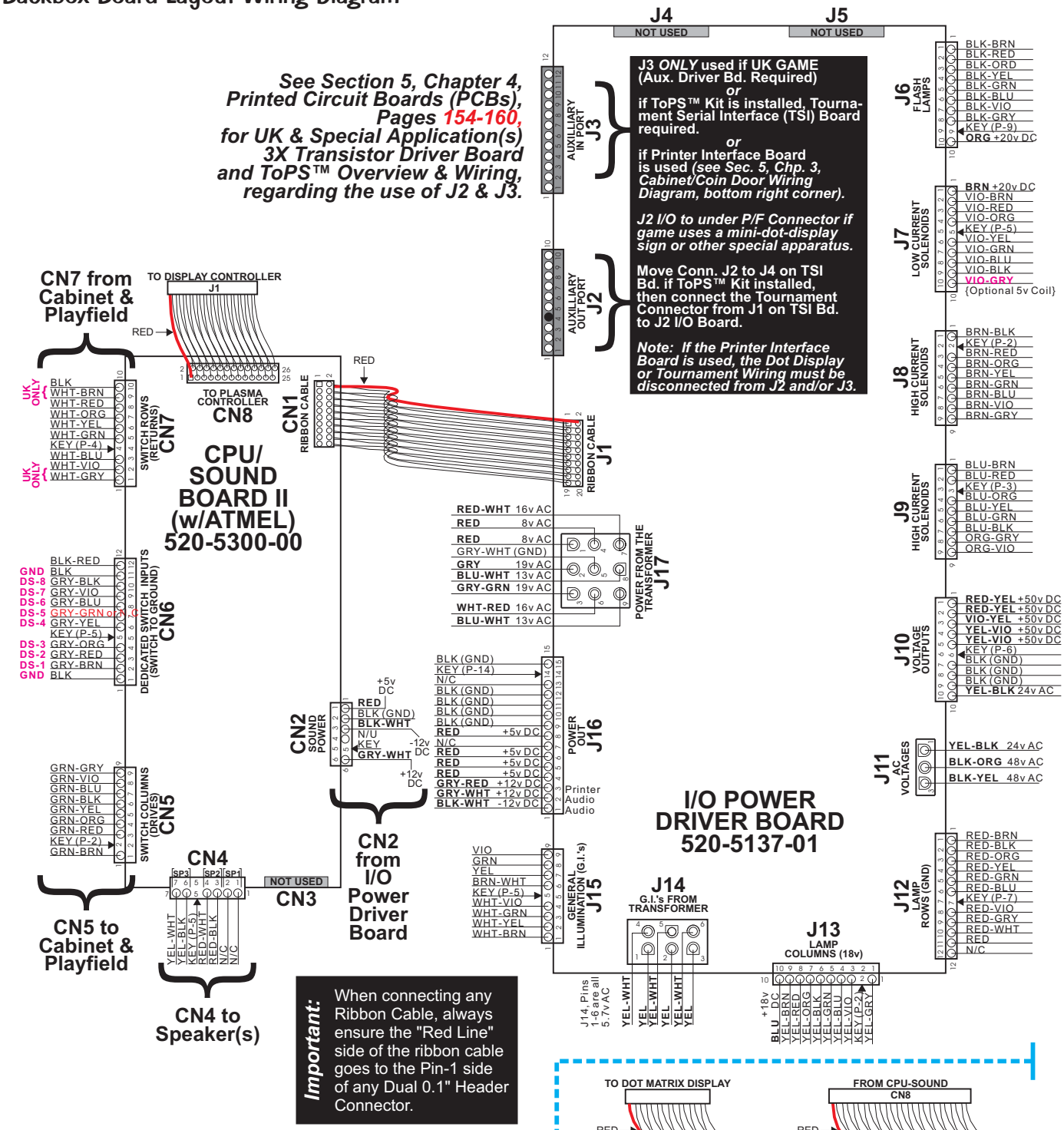

Sec. 5: Backbox ...

Playfield Wiring

General Illumination Circuit Detailed Wiring Diagram

Below: Bottom of Playfield shown as if leaning up against the Backbox.

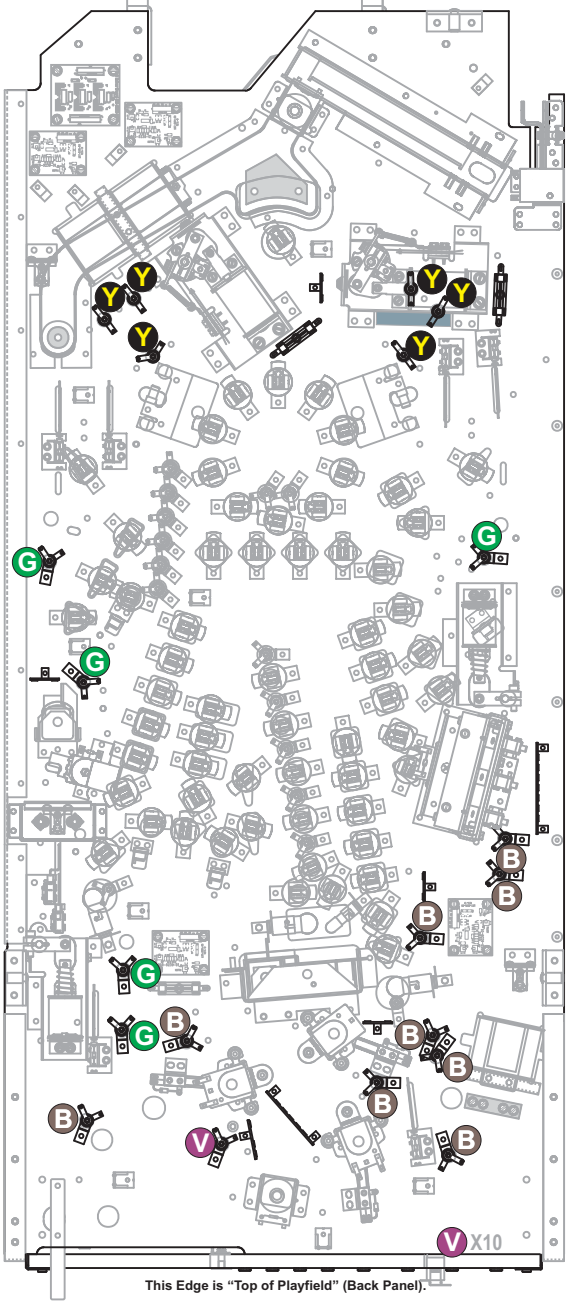

Below: Located at the top of the P/F, rear view of the Back Panel.

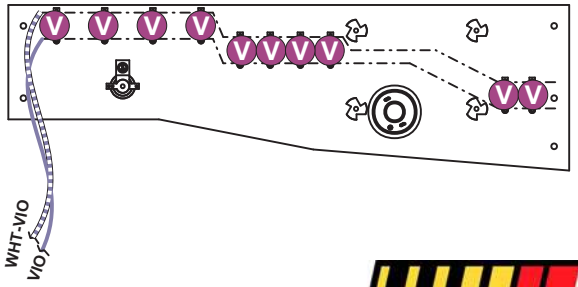

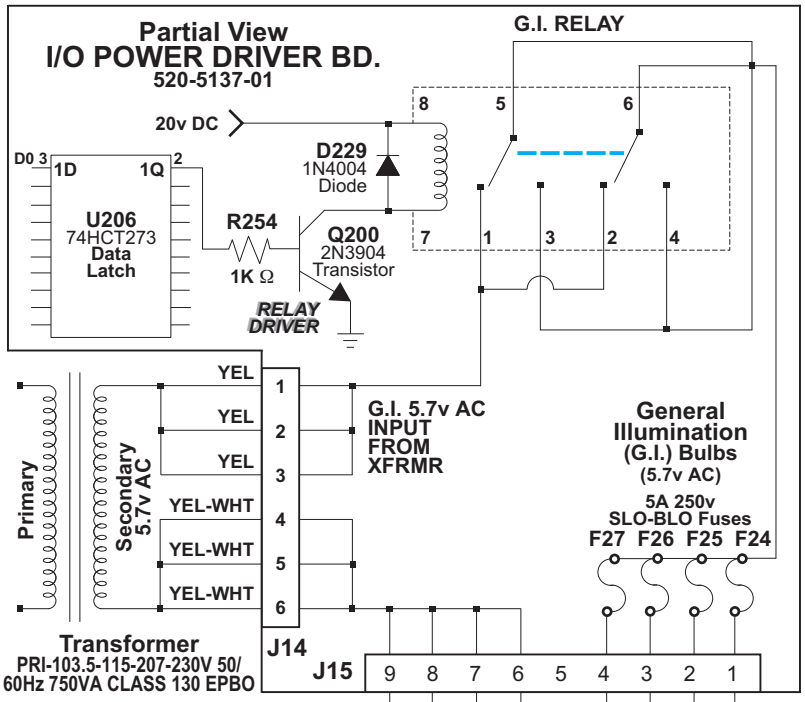

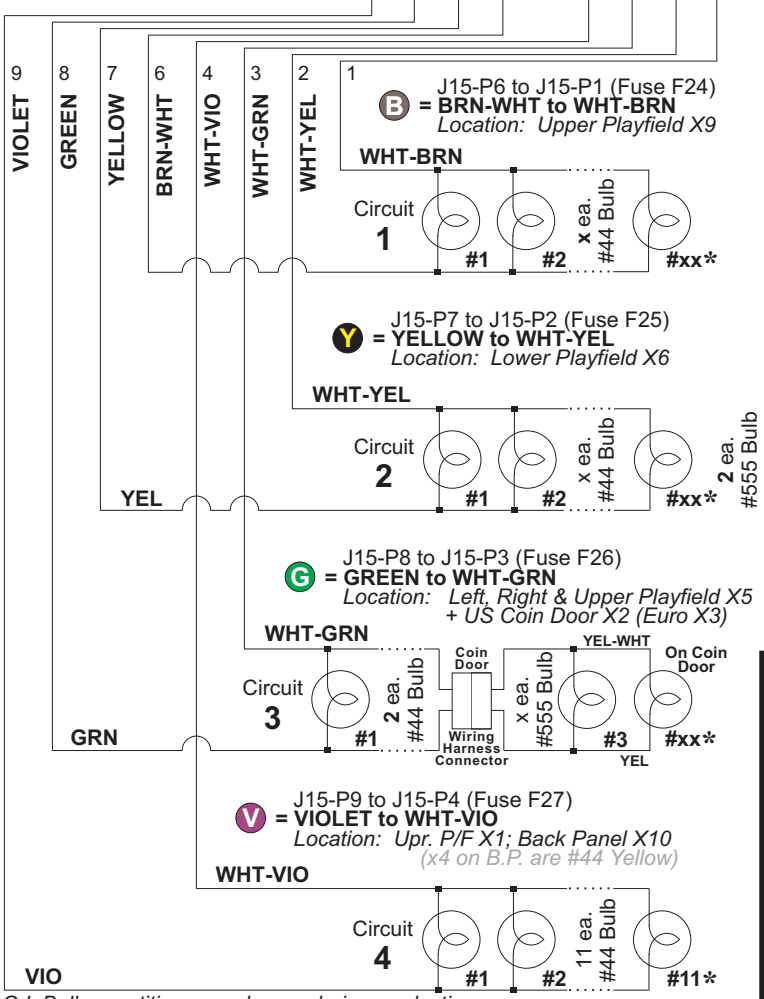

* G.I. Bulb quantities may change during production.

Playfield Switch Wiring Diagram

Note: All Switch, Lamp & Coil assemblies require diodes. Some diodes are ***located under the playfield*** on Terminal Strips ***or*** Diode Boards and not on the assemblies.

For Switch(es): *XX & XX*

DOTS: **D**iode **O**n **T**erminal **S**trip *-or-* DODB: **D**iode **O**n **D**iode **B**oard

Switch **Drive Transistor** Source №: **2N3904**

COLUMN DRIVE	SWITCH DRIVE Wire & Transistor	CN5 PIN
1	GRN-BRN Q1	1
2	GRN-RED Q2	3
3	GRN-ORG Q3	4
4	GRN-YEL Q4	5
5	GRN-BLK Q5	6
6	GRN-BLU Q6	7
7	GRN-VIO Q7	8
8	GRN-GRY Q8	9

CPU/Sound Board

N/C → 10

ROW RETURN	Wire & IC SWITCH RETURN	CN7 PIN
1	WHT-BRN U400	9
2	WHT-RED U400	8
3	WHT-ORG U400	7
4	WHT-YEL U400	6
5	WHT-GRN U401	5
6	WHT-BLU U401	3
7	WHT-VIO U401	2
8	WHT-GRY U401	1

Switch **Return IC** Source №: **LM339AN**

Switch 1 Left Button (UK ONLY)	Switch 9 Not Used	Switch 17 Top Drop Target	Switch 25 Right Orbit	Switch 33 Left Spinner	Switch 41 Not Used	Switch 49 Left Bumper	Switch 57 Left Outlane
Switch 2 4th Coin Slot	Switch 10 Not Used	Switch 18 Middle Drop Target	Switch 26 Left Orbit	Switch 34 Lower Acc. Rt. OPTO	Switch 42 Right Spinner	Switch 50 Right Bumper	Switch 58 Left Return Lane
Switch 3 6th ✻ Coin Slot (✻ Future Expansion)	Switch 11 4-Ball Trough #1 (Left)	Switch 19 Bottom Drop Target	Switch 27 Pit Lock Middle	Switch 35 Lower Acc. Mid. OPTO	Switch 43 Right Standup	Switch 51 Bottom Bumper	Switch 59 Left Slingshot
Switch 4 Right Coin Slot	Switch 12 4-Ball Trough #2	Switch 20 Windmill Motor OPTO	Switch 28 Pit Lock Top	Switch 36 Test Car Standup	Switch 44 Center Standup	Switch 52 Garage VUK	Switch 60 Right Outlane
Switch 5 Center Coin Slot / DBA	Switch 13 4-Ball Trough #3	Switch 21 Left Ramp Make OPTO	Switch 29 Midway Eject	Switch 37 Lower Acc. Left OPTO	Switch 45 Left Standup	Switch 53 Slam Tilt (Optional)	Switch 61 Right Return Lane
Switch 6 Left Coin Slot	Switch 14 4-Ball Trough VUK OPTO	Switch 22 Not Used	Switch 30 Track Exit Popper	Switch 38 Captive Ball	Switch 46 Not Used	Switch 54 Start Button	Switch 62 Right Slingshot
Switch 7 5th ✻ Coin Slot (✻ Future Expansion)	Switch 15 4-Ball Stack-ing OPTO	Switch 23 Truck Ramp Kicker	Switch 31 Not Used	Switch 39 Car Mech Down	Switch 47 Upr. Acc. Top OPTO	Switch 55 Tournament Start	Switch 63 Not Used
Switch 8 Right Button (UK ONLY)	Switch 16 Shooter Lane	Switch 24 Right Ramp Diverter	Switch 32 Pit Lock Bot-tom OPTO	Switch 40 Test Car	Switch 48 Upr. Acc. Bot. OPTO	Switch 56 Plumb Bob Tilt	Switch 64 Not Used

Playfield Lamp Wiring Diagram

Please Note: *Switch & Lamp Descriptions may differ slightly than that of the Dot Display due to space restraints.*

J13-Pin 10 is Power Out for +18v DC to the Display Power Supply Bd at **CN1-Pin 6** ← BLUE 10

Note: All Switch, Lamp & Coil assemblies require diodes. Some diodes are ***located under the playfield*** on Terminal Strips ***or*** Diode Boards and not on the assemblies.

For Lamp(s): *xx & zz-zz*

DOTS: **D**iode **O**n **T**erminal **S**trip *-or-* DODB: **D**iode **O**n **D**iode **B**oard

COLUMN DRIVE	LAMP DRIVE Wire & IC	J13 PIN
1	YEL-BRN U17	9
2	YEL-RED U16	8
3	YEL-ORG U15	7
4	YEL-BLK U14	6
5	YEL-GRN U13	5
6	YEL-BLU U12	4
7	YEL-VIO U11	3
8	YEL-GRY U10	1

Lamp **Drive IC** Source №: **VN02N**

Lamp **Return Transistor** Source №: **STP19N06L**

I/O Power Driver Board

ROW RETURN	LAMP RETURN Wire & Transistor	J12 PIN
1	RED-BRN Q33	1
2	RED-BLK Q34	2
3	RED-ORG Q35	3
4	RED-YEL Q36	4
5	RED-GRN Q37	5
6	RED-BLU Q38	6
7	RED-VIO Q39	8
8	RED-GRY Q40	9
9	RED-WHT Q41	10
10	RED Q42	11

From I/O Pwr. Driver Board **J16-Pins 9-15** ← N/C 12

Lamp 1 Race Position 10	Lamp 2 Victory Lap	Lamp 3 Happy Hour	Lamp 4 100K	Lamp 5 Standup Left	Lamp 6 (R) ACE	Lamp 7 Left Pop	Lamp 8 Special & Millions
Lamp 9 Race Position 9	Lamp 10 Road Course	Lamp 11 Infield Party	Lamp 12 150K	Lamp 13 100K	Lamp 14 R (A) CE	Lamp 15 Right Pop	Lamp 16 Garage
Lamp 17 Race Position 8	Lamp 18 2X Hauler Miles	Lamp 19 Short Track	Lamp 20 200K	Lamp 21 150K	Lamp 22 RA (C) E	Lamp 23 Bottom Pop	Lamp 24 Fule
Lamp 25 Race Position 7	Lamp 26 Collect Race	Lamp 27 Test Car	Lamp 28 250K	Lamp 29 200K	Lamp 30 RAC (E)	Lamp 31 (C) HAMP #1	Lamp 32 Pit Road Sign
Lamp 33 Race Position 6	Lamp 34 Jack pot	Lamp 35 Hauler Ride	Lamp 36 Hard Racing	Lamp 37 250K	Lamp 38 Spin	Lamp 39 C (H) AMP #1	Lamp 40 Move Up
Lamp 41 Race Position 5	Lamp 42 Bonus Jackpot	Lamp 43 Light Extra Ball	Lamp 44 Collect R-A-C-E	Lamp 45 Speed Shots	Lamp 46 Jack pot	Lamp 47 CH (A) MP #1	Lamp 48 CHAMP #1
Lamp 49 Race Position 4	Lamp 50 Multi ball	Lamp 51 Bump N' Run	Lamp 52 Jack pot	Lamp 53 Collect R-A-C-E	Lamp 54 Extra Ball	Lamp 55 CHA (M) P #1	Lamp 56 Scanner
Lamp 57 Race Position 3	Lamp 58 Lock	Lamp 59 Right Sides Only	Lamp 60 Spinners at Max	Lamp 61 Jack pot	Lamp 62 Mode Bonus	Lamp 63 CHAM (P) #1	Lamp 64 Jack pot
Lamp 65 Race Position 2	Lamp 66 Collect R-A-C-E	Lamp 67 Super Fan	Lamp 68 2 to Go	Lamp 69 Left Ramp Standup (L)	Lamp 70 Collect R-A-C-E	Lamp 71 CHAMP (#1)	Lamp 72 Shoot Again
Lamp 73 Race Position 1	Lamp 74 Jackp pot	Lamp 75 Gas N' Go	Lamp 76 1 to Go	Lamp 77 Left Ramp Standup (R)	Lamp 78 Super Jackpot	Lamp 79 Tournament Start Button	Lamp 80 Start Button

Playfield Terminal Strips, Fuses & Misc. Wiring Descriptions & Locations

Please Note: *Terminal Strip(s), Diode Board(s) and/or Fuse Holder(s) locations shown, represent the general location (your game may differ slightly).*

All fuses are rated:
3A 250v Slo-Blo
Do Not Over-Fuse

Bottom of Playfield Shown as if leaning up against the Backbox.

LOWER RIGHT FLIPPER FUSE RED-YEL 3A S.B. BLU-YEL

LOWER LEFT FLIPPER FUSE RED-YEL 3A S.B. GRY-YEL

3A FUSE

G By Right Flipper

E By Eject

D By 3-Bank

C By Bumpers

F

B A

E — SW. 29 — WHT-GRN, ORG-GRN — SWITCH 29 MIDWAY EJECT — Terminal Strip

G — SW. 30 — ORG-BLU, WHT-BLU — SW. 30 TRACK EXIT POPPER — Terminal Strip

D — SW. 52 — WHT-YEL, ORG-YEL — SW. 52 GARAGE VUK — Terminal Strip

F — SW. 17, SW. 18, SW. 19 — WHT-RED, ORG, WHT-ORG, ORG-RED, WHT-BRN, ORG-BRN — SWITCH 17 TOP, SW. 18 MIDDLE, SW. 19 BOTTOM DROP TARGETS — Terminal Strip

C — Q11 — RED (to coil), YEL-VIO, BLK (to coil), BLU-ORG — COIL Q11 BOTTOM BUMPER (LUGLESS) — Terminal Strip

B — LP. 7 — YEL-VIO, BLK, BLK, RED-BRN — LAMP 7 LEFT POP BUMPER — Terminal Strip

A — LP. 23, LP. 15 — BLK, RED-ORG, BLK, YEL-VIO, BLK, BLK, RED-BLK — LAMP 15 RIGHT LP. 23 BOTTOM POP BUMPERS — Terminal Strip

Explanation:
All Switch, Lamp & Coil assemblies require diodes. Some diodes are ***located under the playfield*** on Terminal Strips ***or*** Diode Boards and not on the assemblies. The Switch and Lamp Matrix Grids also note which Switch or Lamp has a diode on a Terminal Strip *(noted by **"DOTS"** meaning: "**D**iode **O**n **T**erminal **S**trip") or on a Diode Board (noted by **"DODB"** meaning: "**D**iode **O**n **D**iode **B**oard").*

For Switches & Lamps PCB Connector & Pin-Out, see the previous page. For Coil PCB Connector & Pin-Out, see pages 106-107.

Legend:

S *= Switch Matrix Number (Below P/F Only)*
L *= Lamp Matrix Number (Pop Bumpers)*
Q *= Coil / Flash (see Pages 106-107)*
DTS / TS *= (Diode) Terminal Strips (A-G)*

*See **Parts Identification & Location (Pink Pages), Playfield Bottom - Misc. Parts and Brackets**, Pg. **65**, for Terminal Strips, Diodes, Fuses and Fuse Holders Part Numbers.*

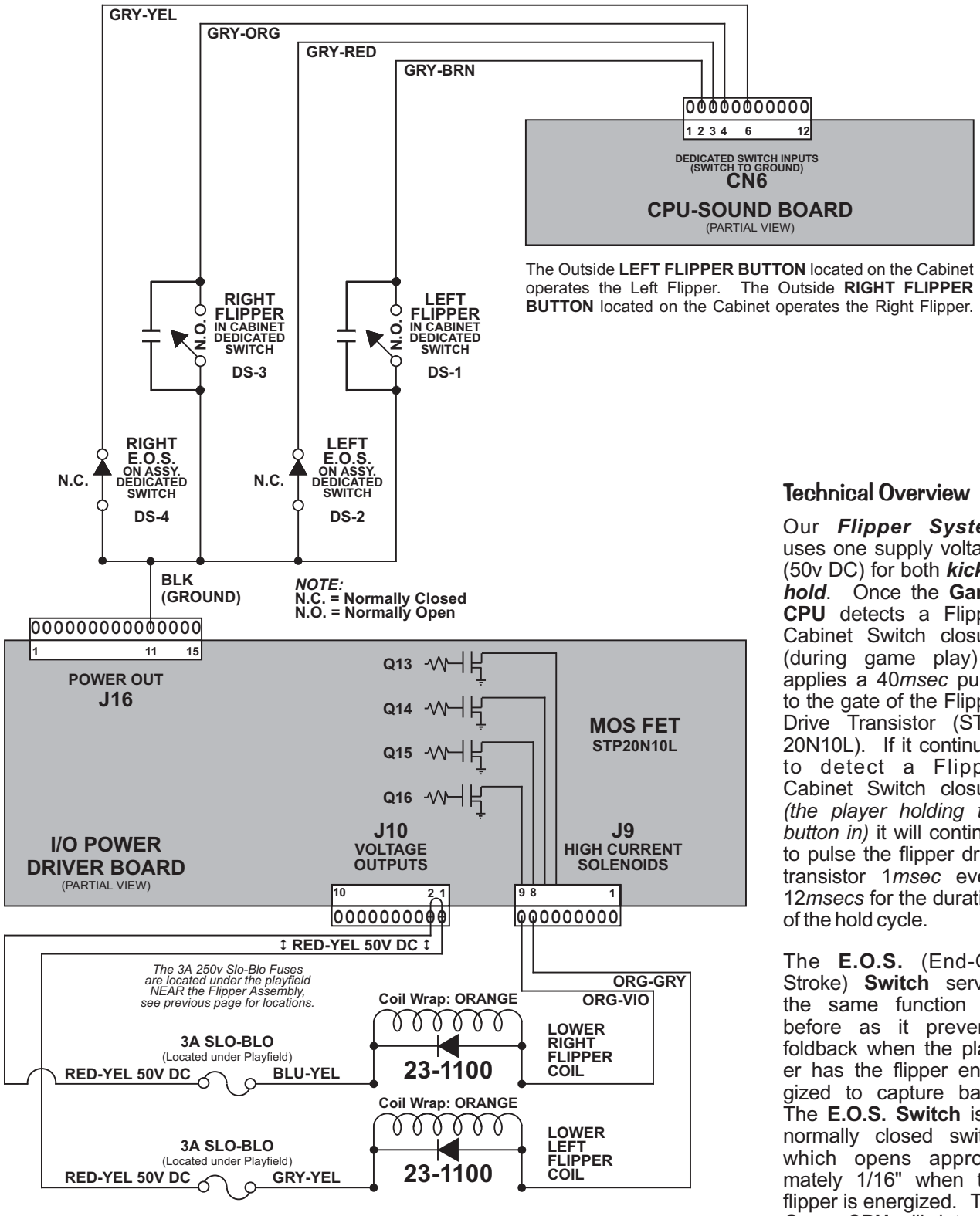

The Outside **LEFT FLIPPER BUTTON** located on the Cabinet operates the Left Flipper. The Outside **RIGHT FLIPPER BUTTON** located on the Cabinet operates the Right Flipper.

Technical Overview

Our ***Flipper System*** uses one supply voltage (50v DC) for both ***kick*** & ***hold***. Once the **Game CPU** detects a Flipper Cabinet Switch closure (during game play) it applies a 40*msec* pulse to the gate of the Flipper Drive Transistor (STP-20N10L). If it continues to detect a Flipper Cabinet Switch closure *(the player holding the button in)* it will continue to pulse the flipper drive transistor 1*msec* every 12*msecs* for the duration of the hold cycle.

The **E.O.S.** (End-Of-Stroke) **Switch** serves the same function as before as it prevents foldback when the player has the flipper energized to capture balls. The **E.O.S. Switch** is a normally closed switch which opens approximately 1/16" when the flipper is energized. The **Game CPU** will detect a switch closure if the flipper bat is forced back by a high velocity shot or rebound on the playfield and will apply another 40*msec* pulse of 50v DC to the coil.

Cabinet Wiring

Transformer Power Wiring Diagram

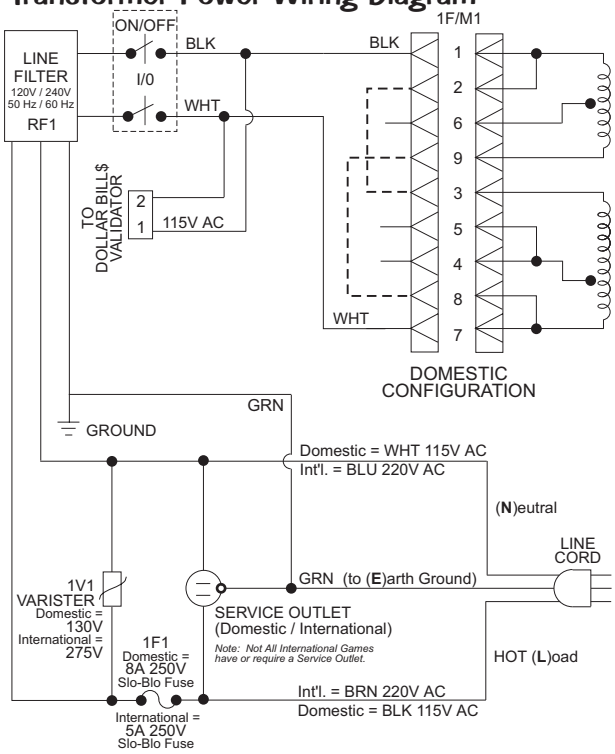

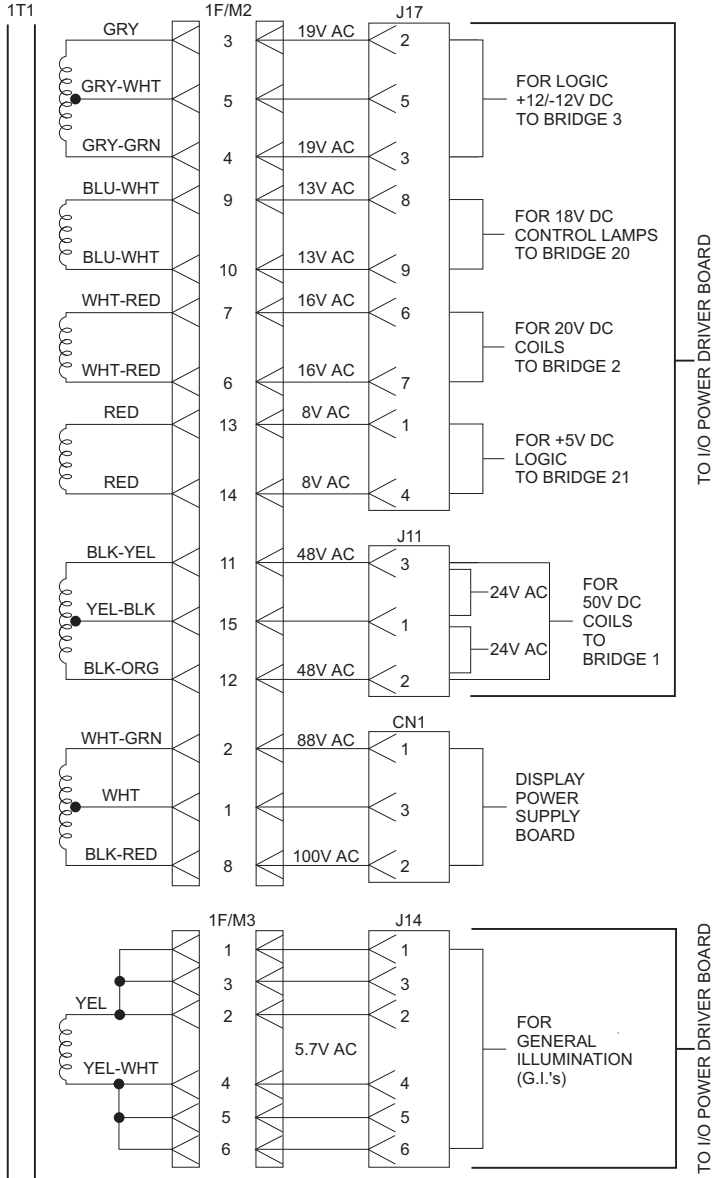

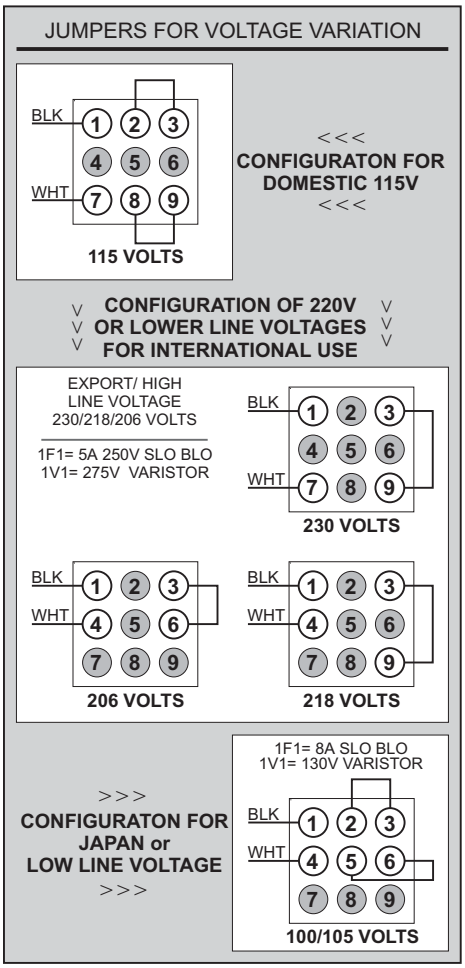

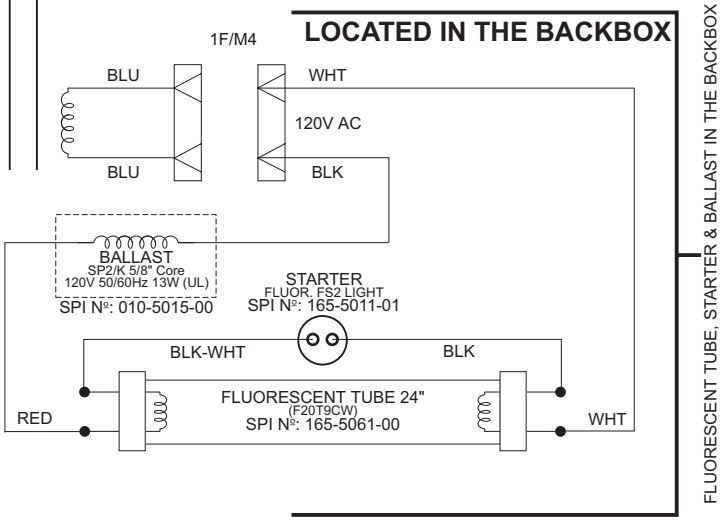

Cabinet / Coin Door Wiring Diagram

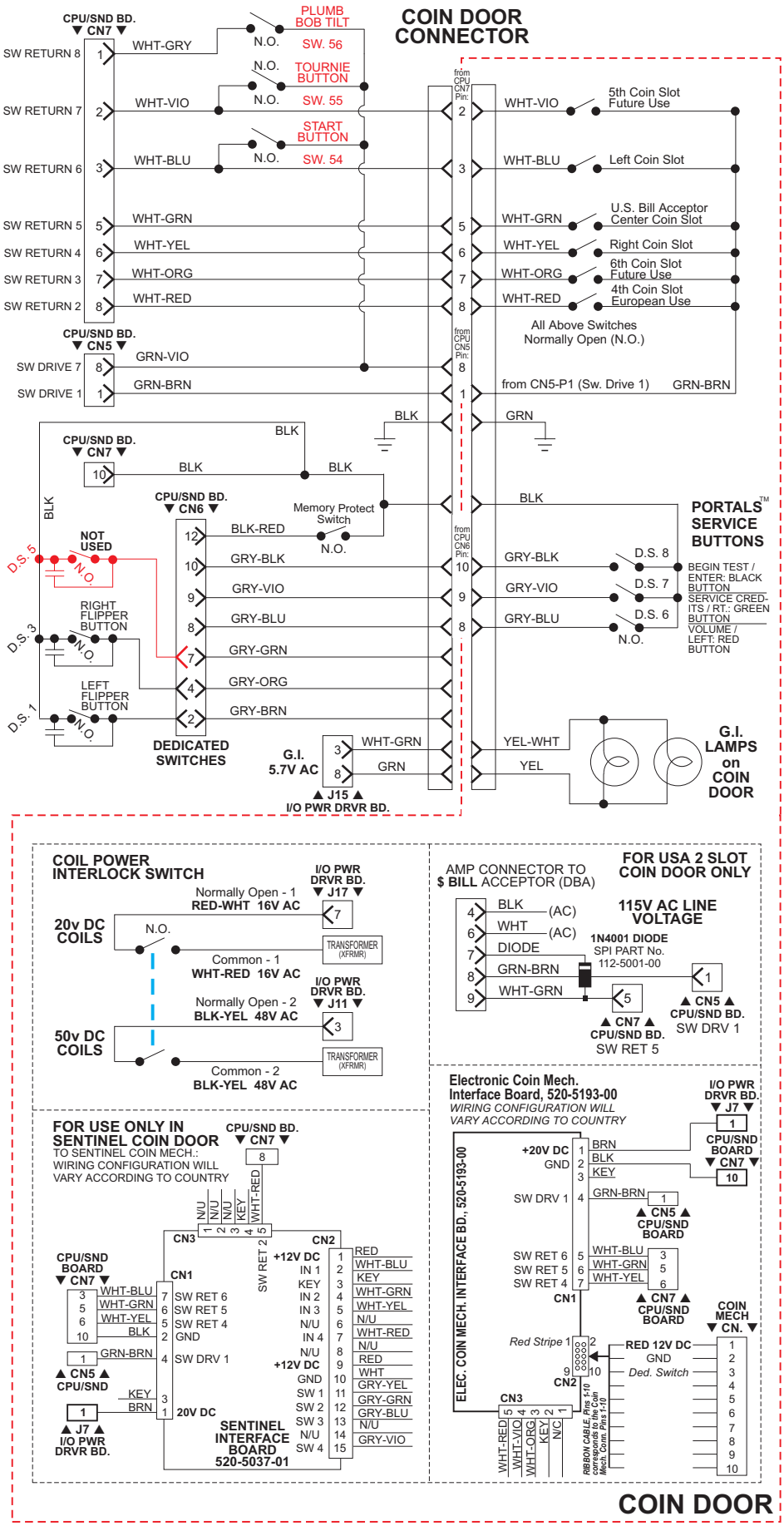

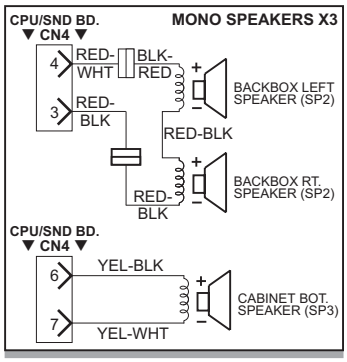

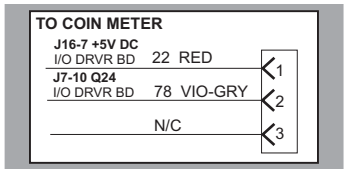

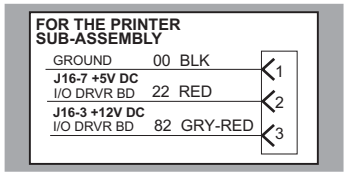

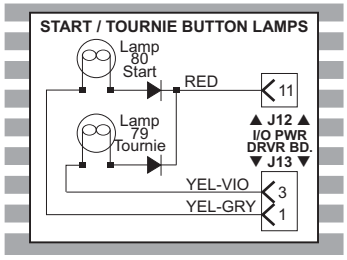

UK ONLY: 2 Extra Cabinet Buttons for the Post Save™ Feature are used. The Left Button operates the Left Outlane Ball Deflector. The Right Button operates the Right Outlane Ball Deflector. Both buttons pushed together operate the Center Up/Down Post. Both buttons are located under the Flipper Buttons.

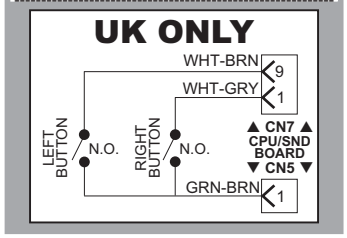

Printed Circuit Boards (PCBs)

Trough Up-Kicker Dual OPTO Boards Theory of Operation & Schematic

As light from the **Transmitter LED1** falls on the **Receiver LED1**, it generates a Positive Bias Voltage (0.7v to 1.5v) which is applied to the **Gate** (**G**) of **Q1 (Fet 2N5460)** turning **Q1** off. When **Q1** is held off, no current flows through **Q2**'s **(2N3906) Base** (**B**). With no *base current,* **Q2** is off and acts as an *OPEN SWITCH*. When the light is interrupted *(BLOCKED)* **R1** (Rec. Bd.) bleeds the gate voltage off of **Q1** allowing it to conduct, switching **Q2** on, which acts as a *CLOSED SWITCH*. The **LED2 (Trans/Rec) Circuit** operates identical as the **LED1 Circuit**.

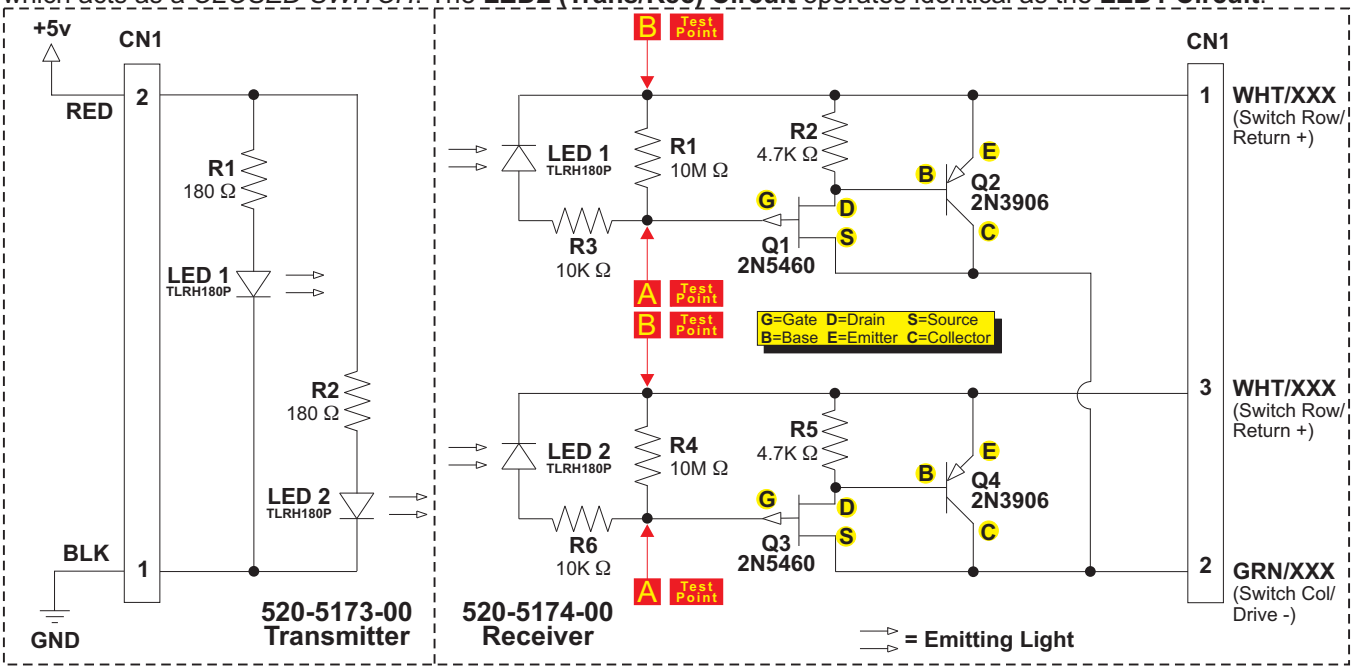

Trough Up-Kicker Dual OPTO Boards Component Layout & Parts

520-5173-00 (TRANS) **Boards Actual Size** **520-5174-00 (REC)**

(Screened Text Printed Larger for Clarity)

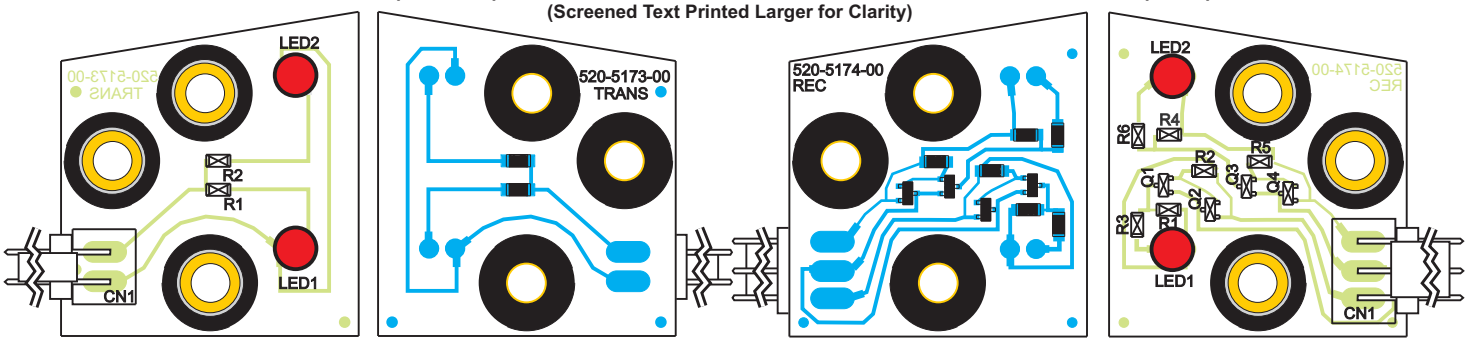

Front Side (LEDs & 2-Pin Connector) | **Back Side** (Solder / Surface Mounts) | **Back Side** (Solder / Surface Mounts) | **Front Side** (LEDs & 3-Pin Connector)

ITEM	QTY	PART NUMBER	REF-DESIGNATOR	DESCRIPTION
A	**1**	**515-0173-00**	**Dual-OPTO Trans. Bd. Assy.**	**PCB Assy.** (with all **Items 1-5**)
—	**1**	**520-5173-00**	**Dual-OPTO Trans. Board**	**PCB Assy.** (with Items **1-3** only)
01	1	045-5111-02	CN1	2X, .156" Rt. Angle (26-60-5020) Conn.
02	**2**	**165-5052-00**	**LED1, LED2**	**LED TLRH180P** (**Ultra Bright Red**)
03	2	121-5067-00	R1, R2	180 Ω 1/8W Chip Res. (CRCW)
04	3	530-5308-02	n/a	OPTO PCB Brass Tube Spacer
05	3	545-5518-00	n/a	OPTO PCB Rubber Grommet
B	**1**	**515-0174-00**	**Dual-OPTO Rec. Bd. Assy.**	**PCB Assy.** (with all **Items 1-9**)
—	**1**	**520-5174-00**	**Dual-OPTO Rec. Board**	**PCB Assy.** (with **Items 1-7** only)
01	1	045-5111-03	CN1	3X, .156" Rt. Angle (26-60-5030) Conn.
02	**2**	**165-5052-00**	**LED 1, LED 2**	**LED TLRH180P** (**Ultra Bright Red**)
03	2	110-5006-00	Q1, Q3	2N5460, Transistor (P-FET SOT-23)
04	2	110-0086-00	Q2, Q4	**2N3906**, Transistor
05	2	121-5082-00	R1, R4	10M Ω 1/8W Chip Res. (CRCW)
06	2	121-5083-00	R2, R5	4.7K Ω 1/8W Chip Res. (CRCW)
07	2	121-5011-00	R3, R6	10K Ω 1/8W Chip Res. (CRCW)
08	3	530-5308-02	n/a	OPTO PCB Brass Tube Spacer
09	3	545-5518-00	n/a	OPTO PCB Rubber Grommet

Replacement Part:
LED TLRH180P
(T1-3/4 GaAlAs)
SPI Part №:
165-5052-00

OPTO Troubleshooting

1. Volt Meter Test (indicates normal operating condition):

A. **OPEN OPTO** (Light Falling on LED) = *SWITCH OPEN*. Place meter leads across points **A** and **B** on the **LED1 Circuit** *(Refer to Schematic Drawing on previous page, 520-5174-00 Receiver Side).* It should read approximately 0.8 - 1.2v DC. The **LED2 Circuit** operates the same.

B. **CLOSED OPTO** (Light Blocked) = *SWITCH CLOSED*. Place meter leads across points **A** and **B** on the **LED1 Circuit** *(Refer to Schematic Drawing on previous page, 520-5174-00 Receiver Side).* It should read approximately 0.0 - 0.1v DC. The **LED2 Circuit** operates the same.

2. Oscilloscope Test (indicates normal operating condition):

Fig. A

Fig. B

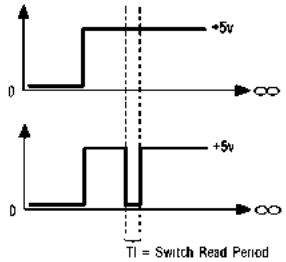

A. **OPEN OPTO** (Light Falling on LED) = *SWITCH OPEN*. Place Scope lead at **Pin-1** of OPTO Rec. Board with Scope Grounded (see Schematic). The Scope should display a **STEADY +5v** as shown in **Fig. A**, Wave Form Diagram.

B. **CLOSED OPTO** (Light Blocked) = *SWITCH CLOSED*. Place Scope lead at **Pin-1** of OPTO Rec. Board with Scope Grounded (see Schematic). The Scope should display a **PULSE STREAM** indicating **Q2** has switched "On" as shown in **Fig. B**, Wave Form Diagram. This is your Switch Drive Pulse.

3. Bench Test (See Fig. C):

Please Note: To perform this test you must use a spare 560Ω Pull-Up Resistor, SPI Nº: 121-5047-00

Disconnect the **OPTO Transmitter / Receiver Board** from the circuit. Connect one side of a 560Ω Pull-Up Resistor to **Pin-1** of the OPTO Receiver Bd. and the other side of the resistor to a 5v DC source. Connect **Pin-2** to GND. Connect a +5v DC source to **Pin-1** of the Transmitter & GND to **Pin-2**. Align with the Receiver OPTO approx. 3" distance. Using your Volt-Meter or an Oscilloscope, monitor **Pin-1** while *BLOCKING* and *UNBLOCKING* the ***BEAM*** from the Trans. The output will be approx. +5v DC when the ***BEAM IS NOT BLOCKED*** and approx. 0v when the ***BEAM IS BLOCKED.***

Fig. C

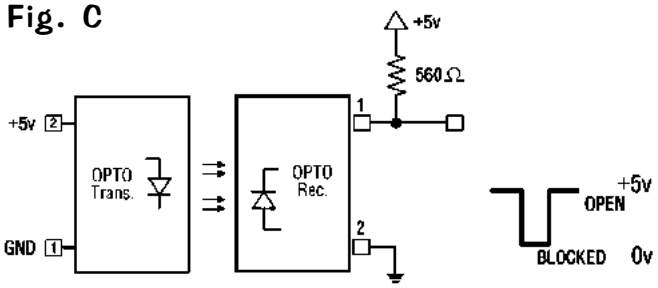

Trough Dual OPTO Boards Alignment / Test for LED1

When a working **OPTO** is installed and connected in a game, the transmitter should light *(LED1 lower & LED2 upper)* when the power is switched on. With the playfield in **Service Position #1** *(playfield lifted up in the half-way position resting on the Prop Rod or edge slide support brackets)* and the game on, the LED lights should show up as a **BRIGHT RED RINGS** through the back of the Receiver Board around the **Receivers LED1 & LED2** *(see **Fig. 1**).* Testing only **LED1:** With the game in ***Switch Test Mode***, lifting the Trough Plunger with a fingertip should block the **BEAM** and cause the Switch Position to trigger *(see **Fig. 2**).* View **Fig. 2a** & **2b** *(on the next page)* for a sectional view of the Light Path *(note alignment)* and what happens as a ball breaks the light beam.

Fig. 1

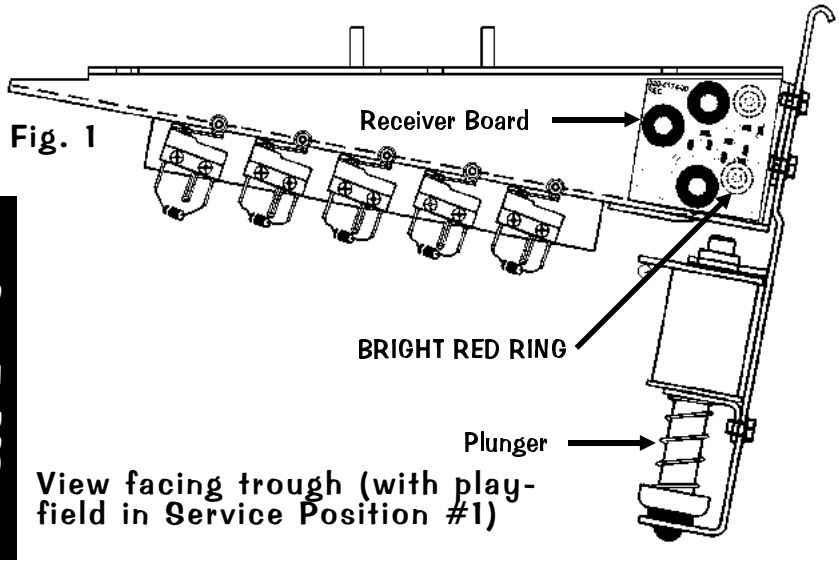

View facing trough (with playfield in Service Position #1)

Fig. 2

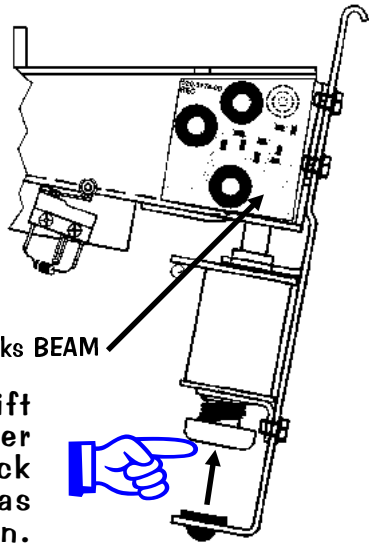

Lift plunger to check switch as shown.

Sectional view from right (Fig. 2a & 2b)

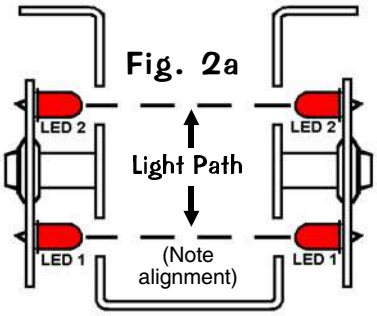

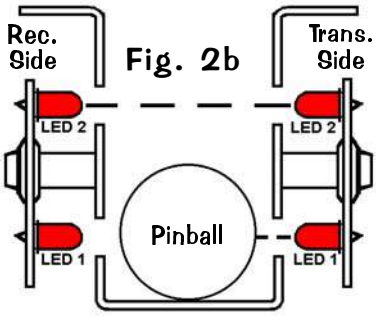

Trough Dual OPTO Boards Alignment / Test for LED2

When a working **OPTO** is installed and connected in a game, the transmitter should light *(LED1 lower & LED2 upper)* when the power is switched on. With the playfield in **Service Position #1** *(playfield lifted up and resting on the Playfield Support Slide Brackets)* and the game on, the LED lights should show up as a **BRIGHT RED RINGS** through the back of the Receiver Board around the **Receivers LED1 & LED2** *(see **Fig. 1**, previous page)*. Testing only **LED2:** *TO PERFORM THIS TEST, A PINBALL MUST BE IN THE BALL TROUGH.* With the game in ***Switch Test Mode***, lifting the Trough Plunger with a finger tip should block the **BEAM** on LED2 and cause the Switch Position to trigger *(see **Fig. 3**)*. View **Fig. 3a** & **3b** for a sectional view of the Light Path *(note alignment)* and what happens as a "double-stacked" ball scenario breaks the light beam.

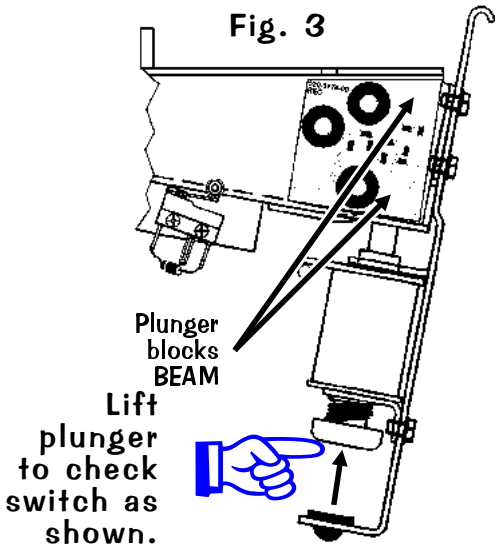

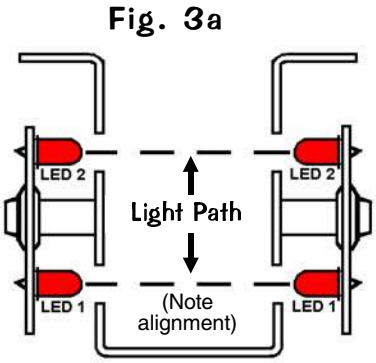

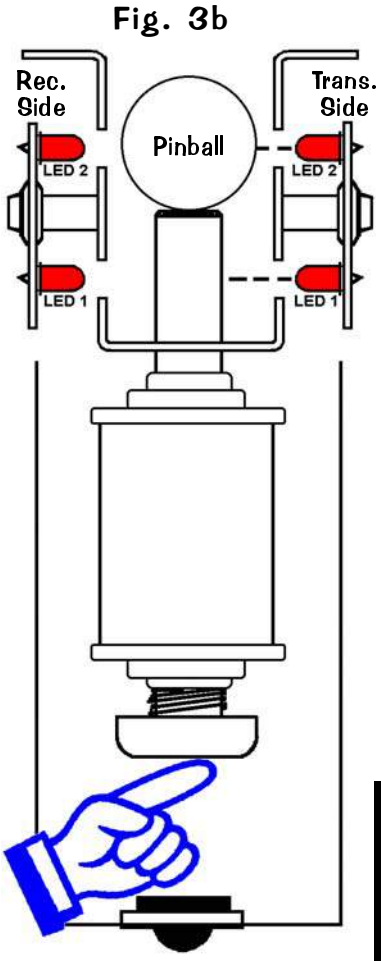

I M P O R T A N T

If replacement of ***LED** is required, insure that is **mounted correctly before and after soldering*** *(See **Fig. 4a** / **4b**).*

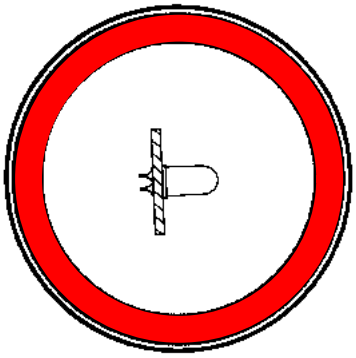

Fig. 4a
Correct Position

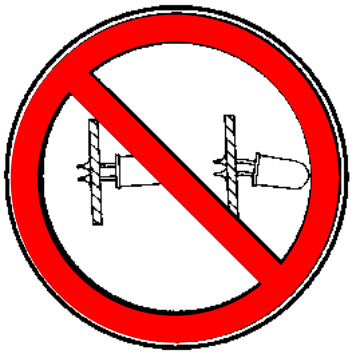

Fig. 4b
Incorrect Position

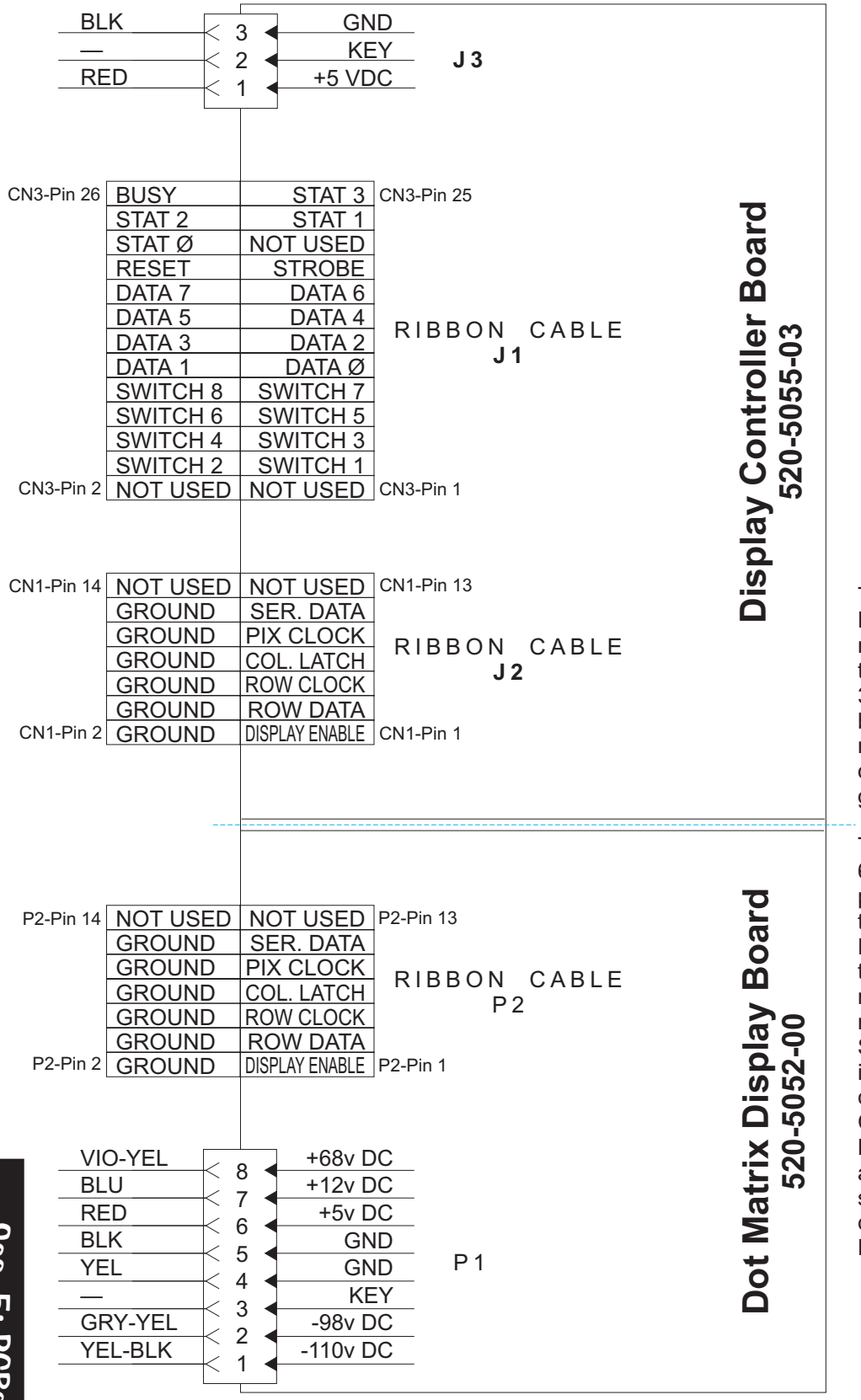

Dot Matrix Display Explained

The display utilizes a Micro-Processor Control Board mounted in piggyback fashion to the Dot Matrix Display (128 X 32) Driver Board. The purpose behind this board is to provide more information to the operator as well as displaying graphics to the player.

The board is controlled by a 6809E Micro processor and its personality ROM (Unique to the Game). It receives Data, Reset & Clock Information from the CPU/Sound Board via the ribbon cable and sends back multiple Status and Busy Signals to the CPU. This is to insure synchronized communication between the CPU and the Display Controller Board. The Drivers for the rows and columns are provided on 5 surface mounted integrated circuits on the Dot Matrix Display Driver Board.

Display Power Supply Board Schematic

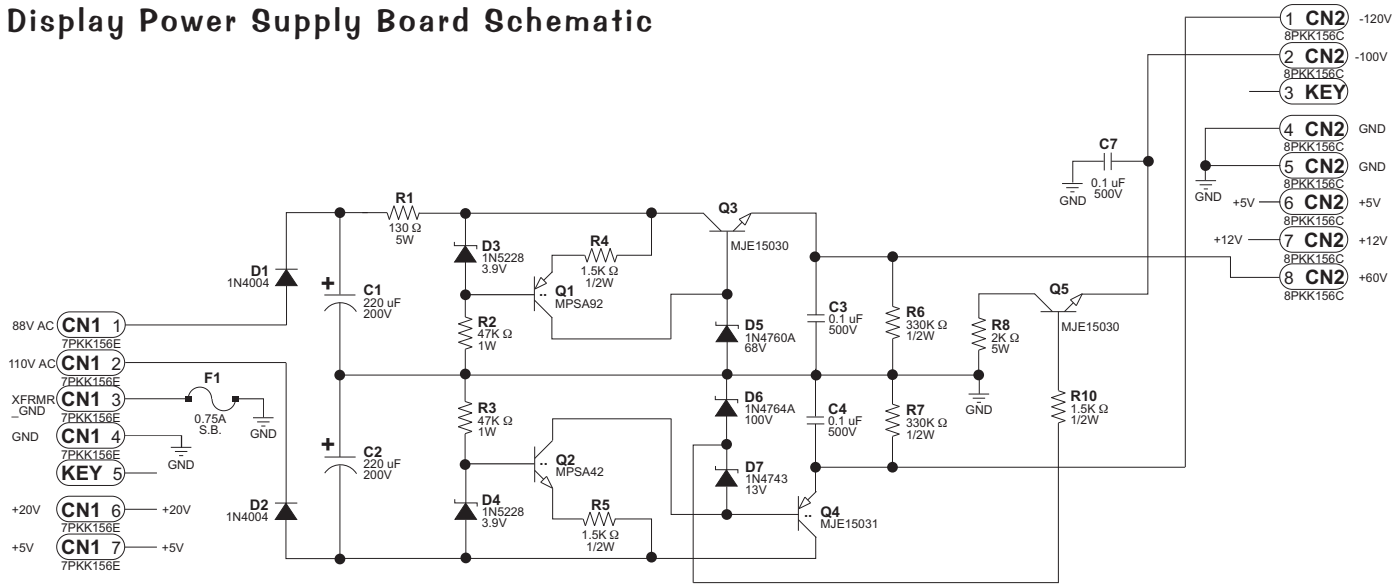

Display Power Supply Board Component Layout & Parts

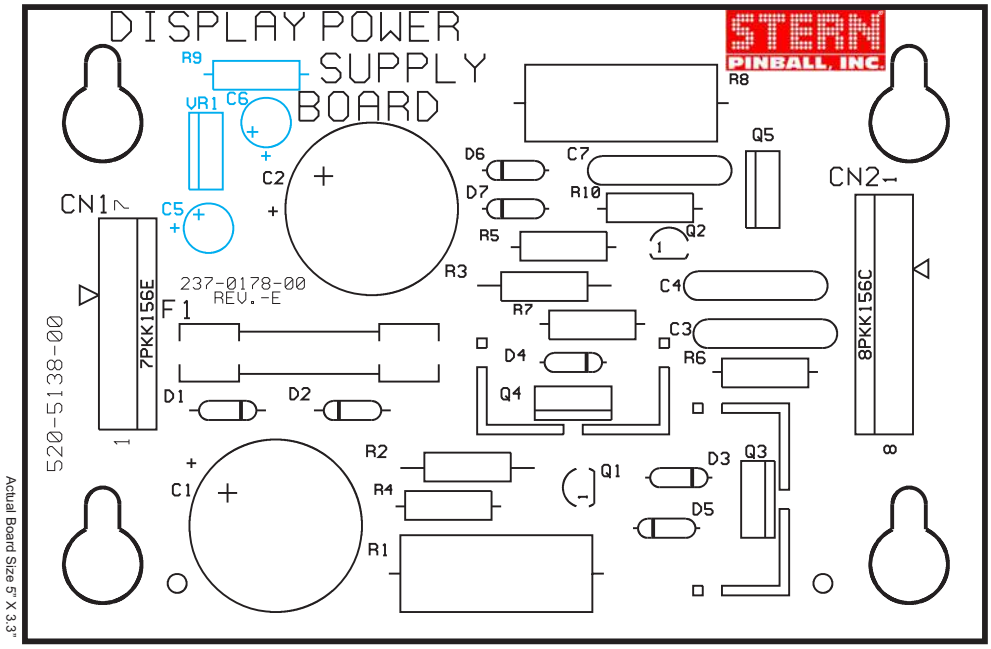

ITEM	QTY	PART NUMBER	REF-DESIGNATOR	DESCRIPTION (NS = Not Stuffed)
—	**1**	**520-5138-00**	**Display Power Supply Board**	**Complete PCB Assembly**
01	2	125-5044-00	C1, C2	220uF, 200v, Radial Lytic Cap.
02	3	125-5035-00	C3, C4, C7	0.1uF, 500v, Ceramic Disk Cap.
03	0	125-5003-00	(C5, C6: NS)	22uF, 35v, Rad Lytic Cap
04	1	045-5015-07	CN1	7PKK156E (PIN5=KEY)
05	1	045-5015-08	CN2	8PKK156 (PIN3=KEY)
06	2	112-5003-00	D1, D2	1N4004, Diode
07	2	112-0053-00	D3, D4	1N5228, 3.9v, Diode
08	1	112-0062-00	D5	1N4760A, 68v, Diode
09	1	112-0049-00A	D6	1N4764A, 100v, Diode
10	1	112-0061-00	D7	1N4743, 13v, Diode
11	1	200-5000-17	F1	3/4A (0.75A) S.B. Fuse
12	2	205-0004-00	F1	Fuse Clip
13	1	110-0100-00	Q1	MPSA92, Transistor
14	1	110-0082-00	Q2	MPSA42, Transistor
15	2	110-0101-00	Q3, Q5	MJE15030, Transistor
16	2	535-5000-11	Q3, Q4	Heatsinks - AAVID #563002
17	2	240-5008-00	Q3, Q4	#6-32 KEPS Nut
18	2	237-5501-00	Q3, Q4	#6-32 X 3/8" PPH Screw
19	1	110-0103-00	Q4	MJE15031, Transistor
20	1	121-5061-00	R1	130 Ω 5W Res.
21	2	121-5060-00	R2, R3	47K Ω 1W Res.
22	3	121-5038-00	R4, R5, R10	1.5K Ω 1/2W Res. (R9: NS)
23	2	121-5059-00	R6, R7	330K Ω 1/2W Res.
24	1	121-5062-00	R8	2K Ω 5W Res.
25	0	124-5003-00	(VR1: NS)	7812CT

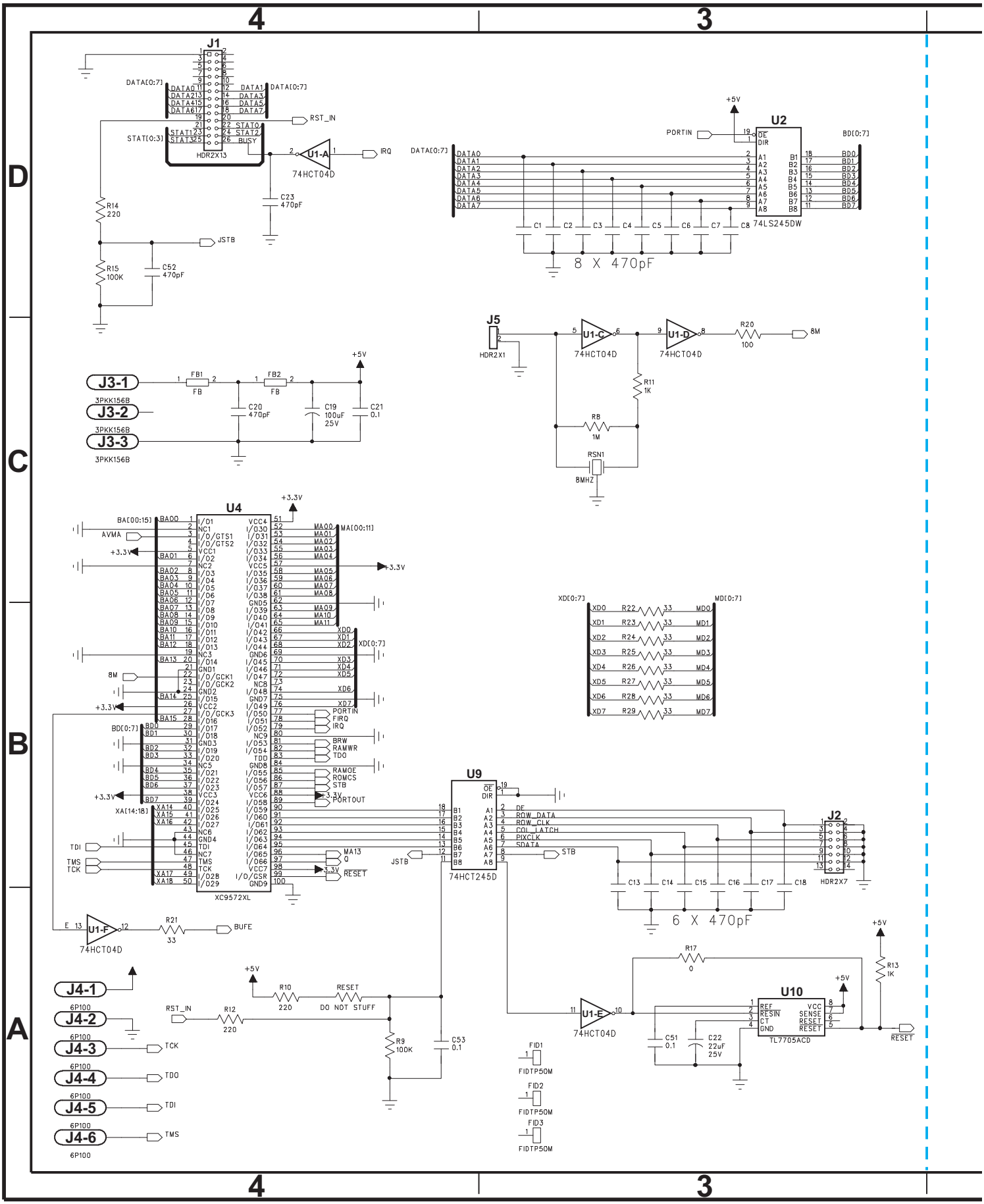
J1
HDR2X13
DATA[0:7]
STAT[0:3]
RST_IN
IRQ
U1-A
74HCT04D
C23
470pF
R14
220
R15
100K
C52
470pF
JSTB
U2
74LS245DW
PORTIN
BD[0:7]
8 X 470pF
J5
HDR2X1
U1-C
U1-D
R20
100
8M
R11
1K
R8
1M
RSN1
8MHZ
J3-1
J3-2
J3-3
3PKK156B
FB1
FB2
FB
C20
470pF
C19
100uF
25V
C21
0.1
U4
XC9572XL
BA[00:15]
AVMA
MA[00:11]
XD[0:7]
XD0 R22 33 MD0
XD1 R23 33 MD1
XD2 R24 33 MD2
XD3 R25 33 MD3
XD4 R26 33 MD4
XD5 R27 33 MD5
XD6 R28 33 MD6
XD7 R29 33 MD7
PORTIN
FIRQ
IRQ
BRW
RAMWR
TDO
RAMOE
ROMCS
STB
PORTOUT
XA[14:18]
TDI
TMS
TCK
MA13
Q
RESET
U9
74HCT245D
DF
ROW_DATA
ROW_CLK
COL_LATCH
PIXCLK
SDATA
STB
J2
HDR2X7
6 X 470pF
U1-F
R21
33
BUFE
J4-1
J4-2
J4-3
J4-4
J4-5
J4-6
6P100
R10
220
RESET
DO NOT STUFF
R12
220
R9
100K
C53
0.1
FID1
FID2
FID3
FIDTP50M
R17
0
U1-E
U10
TL7705ACD
C51
0.1
C22
22uF
25V
R13
1K

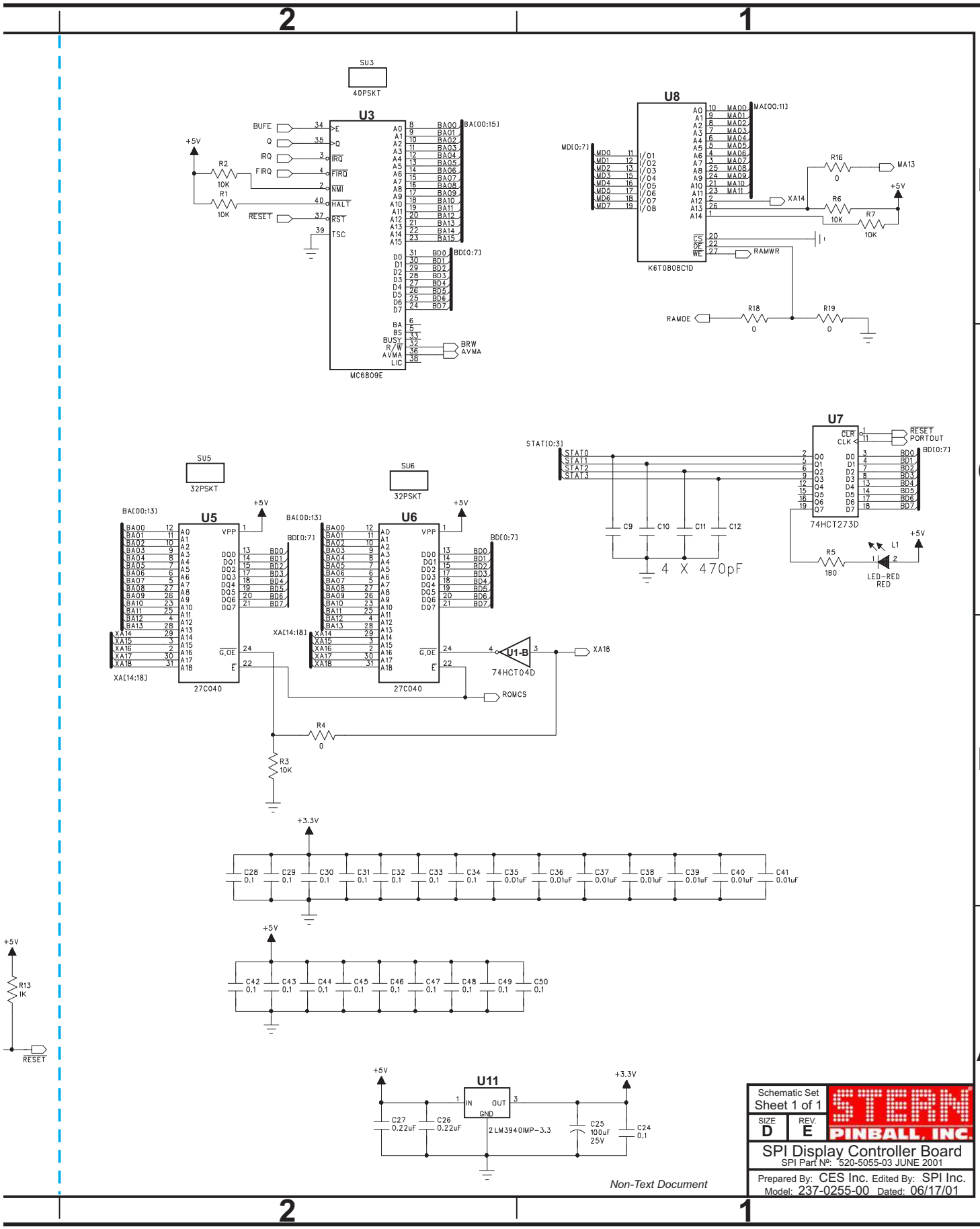
SU3
40PSKT
U3
MC6809E
BUFE
Q
IRQ
FIRQ
RESET
+5V
R2
10K
R1
10K
BA[00:15]
BD[0:7]
BRW
AVMA
U8
K6T0808C1D
MD[0:7]
MA[00:11]
XA14
RAMWR
RAMOE
R16
0
MA13
R6
10K
R7
10K
R18
0
R19
0
U7
74HCT273D
STAT[0:3]
RESET
PORTOUT
C9
C10
C11
C12
4 X 470pF
R5
180
L1
LED-RED
RED
SU5
32PSKT
U5
27C040
SU6
32PSKT
U6
27C040
BA[00:13]
XA[14:18]
U1-B
74HCT04D
XA18
ROMCS
R4
0
R3
10K
+3.3V
C28 0.1
C29 0.1
C30 0.1
C31 0.1
C32 0.1
C33 0.1
C34 0.1
C35 0.01uF
C36 0.01uF
C37 0.01uF
C38 0.01uF
C39 0.01uF
C40 0.01uF
C41 0.01uF
C42 0.1
C43 0.1
C44 0.1
C45 0.1
C46 0.1
C47 0.1
C48 0.1
C49 0.1
C50 0.1
R13
1K
RESET
U11
IN
OUT
GND
LM3940IMP-3.3
C27 0.22uF
C26 0.22uF
C25 100uF 25V
C24 0.1
Non-Text Document
Schematic Set
Sheet 1 of 1
SIZE D
REV. E
STERN PINBALL, INC.
SPI Display Controller Board
SPI Part Nº: 520-5055-03 JUNE 2001
Prepared By: CES Inc. Edited By: SPI Inc.
Model: 237-0255-00 Dated: 06/17/01

Display Controller Board Component Layout & Parts

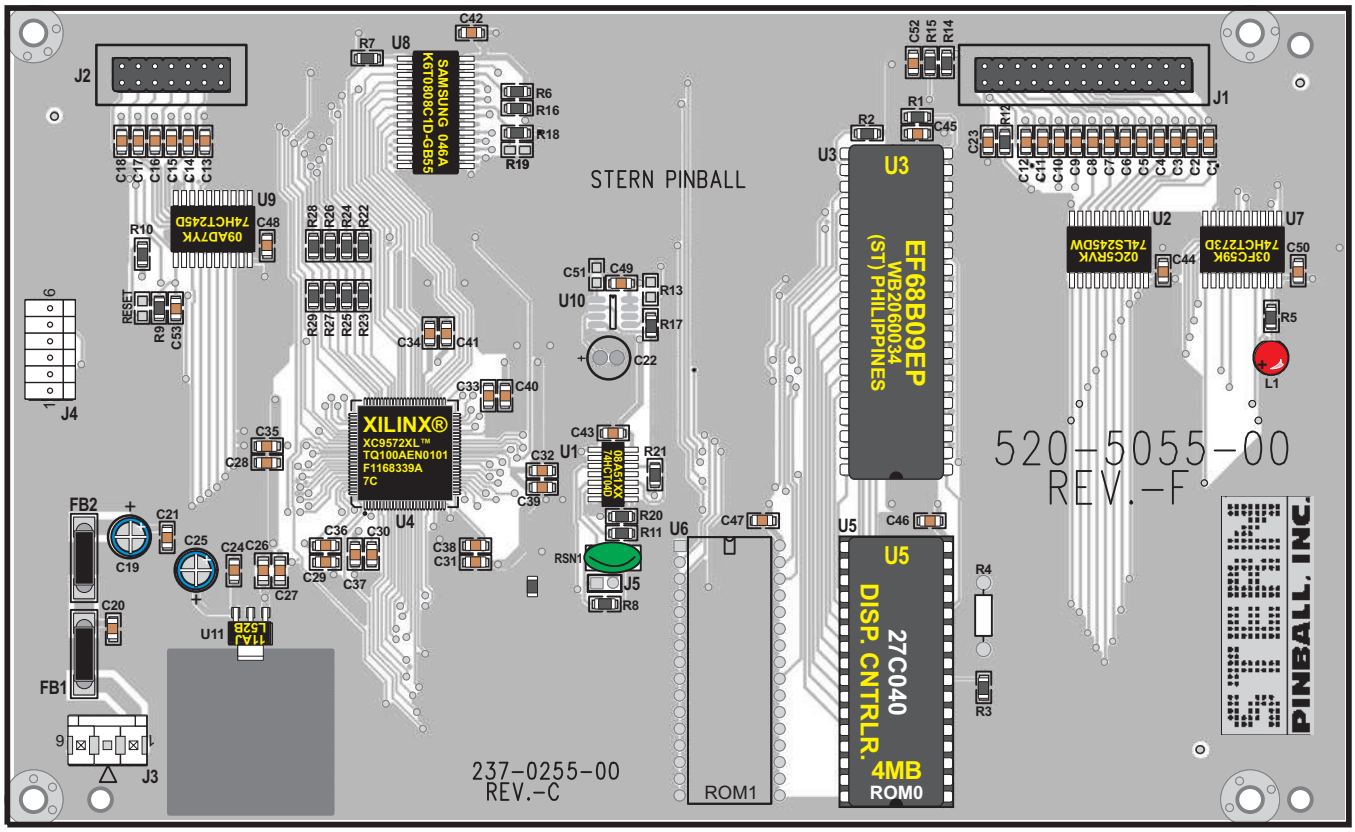

Actual Board Size 20.5cm X 12.5cm

ITEM	QTY	PART NUMBER	REF-DESIGNATOR	DESCRIPTION (NS = Not Stuffed)
—	**1**	**520-5055-03**	**Display Controller Bd. (FCC FEB98) Rev. E June 2001**	**Complete PCB Assembly**
01	1	045-5015-26	J1	13-Pin, Dual row .1" Hdr. Conn HDR2X13
02	1	045-5015-02	J2	7-Pin, Dual Row .1" Hdr. Conn HDR2X7
03	1	045-5015-03	J3	3-Pin, PKK156B Connector
04	1		J4	6-Pin (6P100)
05	7		C35-C39, C40, C41	SMT 0.01uF, 50v Cap. 103-0805-X7R
06	20		C21, C24, C28-C32, C33, C34, C42, C43, C44, C45, C46 C47, C48, C49, C50, C53 (C51: NS)	SMT 0.1uF, 50v Cap. 104-0805
07	2		C26, C27	SMT 0.22uF, 50v Cap. 224-1206-Z5U
08	21		C1-C12, C13-C18, C20, C23, C52	SMT 470pF, 50v Cap. 471-0805
09	2		C19, C25	100uF, 25v TCap.
10	**1**	**165-5099-00**	**L1**	**LED T1-3/4 DIFFUSER RED**
11	4		R16-R18 (R19: NS)	0 Ω 1/10W Resistor 0805
12	1	n/a	RESET	*DO NOT STUFF*
13	2		R11, R13	SMT 1K Ω 1/10W Resistor 0805
14	1		R8	SMT 1M Ω 1/10W Resistor 0805
15	5		R1, R2, R3, R7 (R6: NS)	SMT 10K Ω 1/10W Resistor 0805
16	9		R21, R22-R29	SMT 33 Ω 1/10W Resistor 0805
17	1		R20	SMT 100 Ω 1/10W Resistor 0805
18	2		R9, R15	SMT 100K Ω 1/10W Resistor 0805
19	1		R5	SMT 180 Ω 1/10W Resistor 0805
20	3		R10, R12, R14	SMT 220 Ω 1/10W Resistor 0805
21	1	100-5054-00	U1	SMT 74HCT04D (74LS04)
22	1	100-5055-00	U2	SMT 74LS245DW
23	1	100-0189-01	U3 *(40-Pin Socket, 077-X)*	MC6809E
24	1	100-5044-00	U4	**XILINX®**, XC9572XL
25	2 (See Pg. **DR. ❶** Table)		U5 (ROM0) (U6: NS) *(32-Pin, IC Dip Socket, 077-5217-00)*	4MB ROM 27C040 (M27C401-100)
26	1	100-5056-00	U7	SMT 74HCT273D
27	1	100-5045-00	U8	K6T0808C1D-GB55, Int. Samsung 046A
28	1	100-5057-00	U9	SMT 74HCT245D
29	1	100-5058-00	U11	SMT LM3940IMP-3.3v Regulator
30	1	140-0041-00	RSN1	8MHZRSN (8Mhz) Crystal
31	2	n/a	FB1, FB2	Ferrite Bead, FB0370
32	0		FID1-3	FIDTP50M

If a part is required where a part number is not provided, call Technical Support (see back of cover).

5v Supply:
An AC voltage of approximately 9v comes into the board at [**J17-**(1-4)] this AC voltage is then *full-wave rectified* by bridge **BRDG 21** and filtered by Capacitor **C203**. The resulting voltage is 11v DC which is inserted into a linear voltage regulator for the output of 5v DC. This 5v regulated voltage can be adjusted by potentiometer **R116** the voltage should be set to 5.00v. Besides powering the **I/O Board** the regulated 5 volts supplies power to the **CPU / Sound Board**, **Gas Plasma (Dot Matrix) Display** and **Plasma (Display) Controller Board**. Power for these devices comes off the **I/O Board** on [**J16**-(4-8)].

+5v, +20v, +50v, +18v, & +12v LED Indicators:
These DC voltages are derived on the **I/O Board** by rectification and filtering. Each has a **LED** indicating that power is being supplied to each of these voltage sources. The **-12v** supply comes from the same transformer winding as the **+12v** thus it does not have a **LED** indicator.

LED	SUPPLY VOLTAGE
L2	+5
L200	+20v
L201	+50v
L202	+18v
L203	+12v

*** **Note** that the +50v & +20v power sources are turned off by the Interlock Switches when the Coin Door is OPEN.*

Reset Circuitry:
The I/O will reset in three (3) cases:

1. The CPU is in reset. The CPU's reset signal is fed into the **I/O** through connector **J1** and forces the **I/O** into reset.
2. The 5v supply has fallen below 4.75v.
3. The watchdog is not being fed by the scanning of the light matrix. More specifically **Pin-19** of **U6** must be toggling once every ***50ms*** to prevent the watchdog from resetting. The scanning of the light matrix is controlled by the CPU through **J1**.

LED L204 shows the reset state of the **I/O Board**. If this **LED** is not lit either the 5v DC is below 4.75v or the **CPU/Sound Board** is holding the **I/O** in reset. If the **LED** is flashing this means that the watchdog is not being feed by the **CPU/Sound Board** and the **I/O** is oscillating into and out of reset. If the **LED** is continuously on the board is out of reset and communication from the CPU to the lamp matrix is confirmed. ***Testpoint Blanking*** is the actual reset signal on the **I/O Board**. A low voltage indicates that it is in reset this will turn off all Solenoid *(Coil)* Drivers, Flash Lamps, Lamp Matrix Drivers, Auxiliary Outputs and Flipper Outputs. A high voltage indicates that it is out of reset and normal operation can take place.

Address Decoding:
All Address decoding is done by two **74LS138's (U204 & U205)** (3 of 8 decoder). Both of these must be in operation for the **I/O Board** to function properly.

Solenoid (Coil) Drivers & Flash Lamps:
J8 & **J9** are high side drivers for driving solenoids and other heavy loads. Each connector has its own buffer driving 8 drivers. **J8** & **J9** consist of **MOSFET Drivers 20N10L** which can easily & safely be tested by clipping one end of a clip-lead to test point **FET TPL1** and then the other to the corresponding gate resistor **R1-R16** *(see Note 1).* This will apply 3.4v to the gate of the **MOSFET Transistor** thus switching it on. **J7** & **J6** each are a bank of 8 low side driver for driving lamps or other lower current solenoids *(coils).* They use a Bipolar Power Transistor **TIP122** which can also be tested by using **TEST POINT TIP TPL3** and the corresponding resistors **R17-R32*** *(see Note 1).*

Note 1 • *Clip on the resistor side with the white stripe.* •• *R1 controls Q1, R2 controls Q2, et cetera...*

Auxiliary In & Out:
J2-8 CMOS Outputs sometimes used for a printer interface.
J3-8 CMOS Inputs general purpose inputs.

Lamp Matrix:
J12 has 10 low side drivers for the lamp strobes which consist of **19N06L MOSFETS**. Only one lamp strobe should be low at any time. Again the scanning of the lamp strobes keeps the **I/O** from resetting. **J13** has 8 high side drivers with each having a status indicator. All the status indicators are logically 'OR'ed together and fed back to the **CPU/Sound Board**. The status can identify open loads *(for example open lamp filaments or intermittent connections)* and short circuits. These drivers are also short-circuit protected.

General Illumination (G.I.) Lights:
J15 has 6v AC switched on & off by a relay on the **I/O Board**. The relay is controlled by **Q200** which supplies power to the 24v coil winding to activate the relay. There are 4 taps on **J15** each fused at 5A for this 6v AC source.

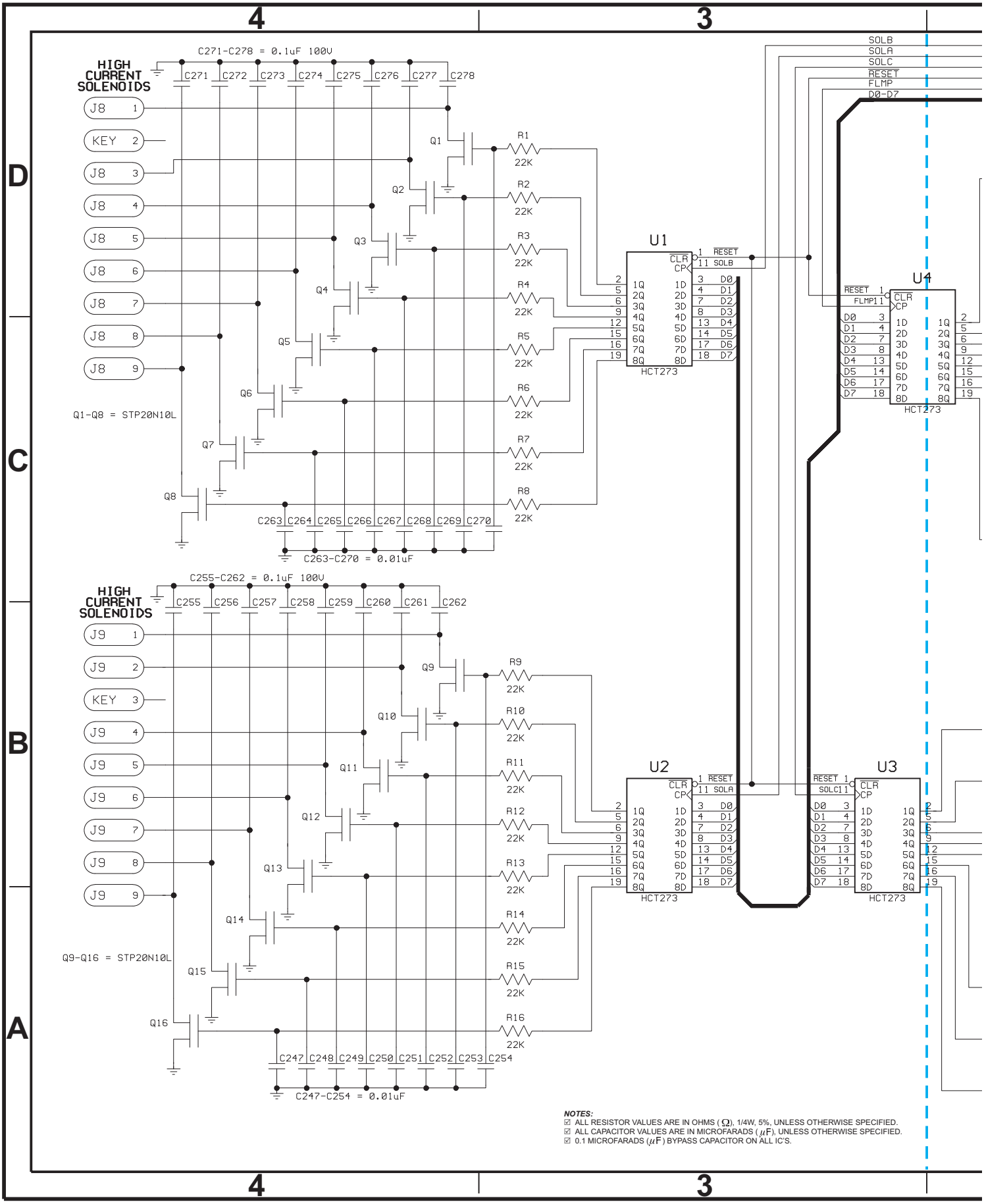
HIGH CURRENT SOLENOIDS
C271-C278 = 0.1uF 100V
C271 C272 C273 C274 C275 C276 C277 C278
J8 1
KEY 2
J8 3
J8 4
J8 5
J8 6
J8 7
J8 8
J8 9
Q1-Q8 = STP20N10L
R1 22K
R2 22K
R3 22K
R4 22K
R5 22K
R6 22K
R7 22K
R8 22K
C263 C264 C265 C266 C267 C268 C269 C270
C263-C270 = 0.01uF
U1
HCT273
SOLB
SOLA
SOLC
RESET
FLMP
D0-D7
U4
FLMP11
HCT273
HIGH CURRENT SOLENOIDS
C255-C262 = 0.1uF 100V
C255 C256 C257 C258 C259 C260 C261 C262
J9 1
J9 2
KEY 3
J9 4
J9 5
J9 6
J9 7
J9 8
J9 9
Q9-Q16 = STP20N10L
R9 22K
R10 22K
R11 22K
R12 22K
R13 22K
R14 22K
R15 22K
R16 22K
C247 C248 C249 C250 C251 C252 C253 C254
C247-C254 = 0.01uF
U2
HCT273
U3
SOLC11
HCT273
NOTES:
ALL RESISTOR VALUES ARE IN OHMS (Ω), 1/4W, 5%, UNLESS OTHERWISE SPECIFIED.
ALL CAPACITOR VALUES ARE IN MICROFARADS (μF), UNLESS OTHERWISE SPECIFIED.
0.1 MICROFARADS (μF) BYPASS CAPACITOR ON ALL IC'S.

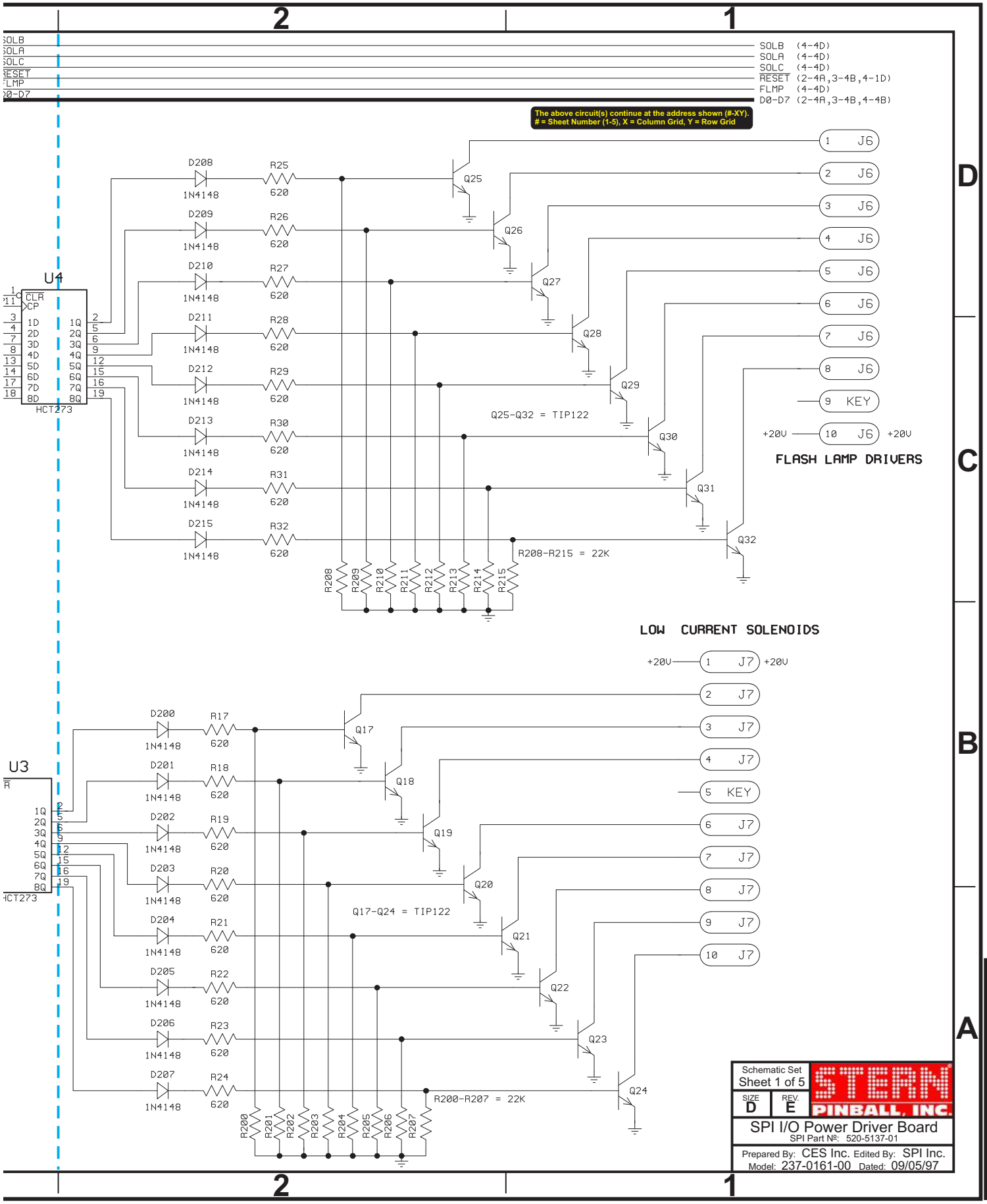
SOLB (4-4D)
SOLA (4-4D)
SOLC (4-4D)
RESET (2-4A,3-4B,4-1D)
FLMP (4-4D)
D0-D7 (2-4A,3-4B,4-4B)
The above circuit(s) continue at the address shown (#-XY).
= Sheet Number (1-5), X = Column Grid, Y = Row Grid
U4
HCT273
Q25-Q32 = TIP122
R208-R215 = 22K
FLASH LAMP DRIVERS
+20V
LOW CURRENT SOLENOIDS
U3
HCT273
Q17-Q24 = TIP122
R200-R207 = 22K
Schematic Set
Sheet 1 of 5
SIZE D
REV. E
STERN PINBALL, INC.
SPI I/O Power Driver Board
SPI Part №: 520-5137-01
Prepared By: CES Inc. Edited By: SPI Inc.
Model: 237-0161-00 Dated: 09/05/97

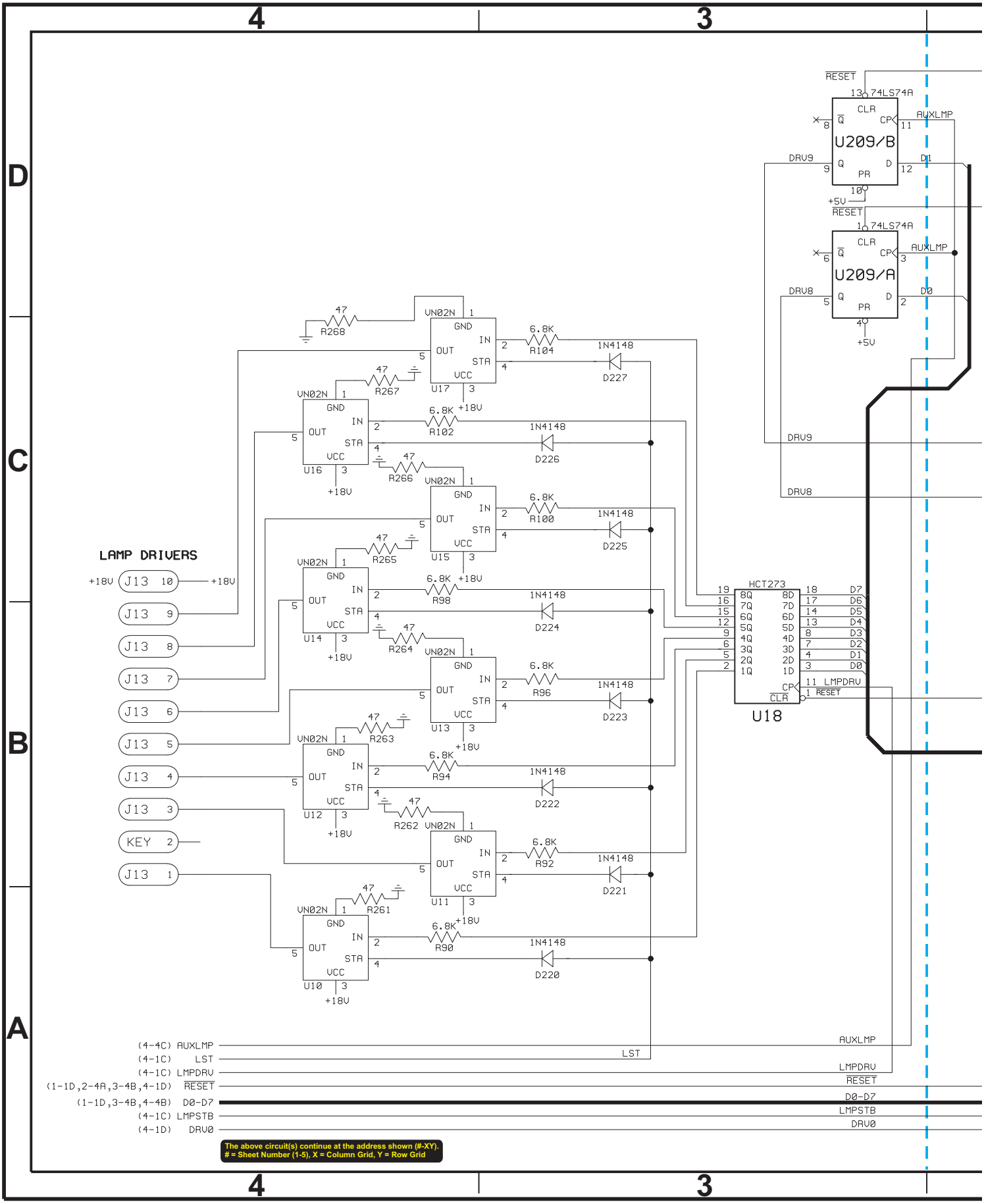
4
3
D
C
B
A
RESET
74LS74A
CLR
Q
CP
AUXLMP
U209/B
DRV9
D1
PR
+5V
U209/A
DRV8
D0
LAMP DRIVERS
+18V
J13 10
J13 9
J13 8
J13 7
J13 6
J13 5
J13 4
J13 3
KEY 2
J13 1
UN02N
GND
IN
OUT
STA
VCC
U17
U16
U15
U14
U13
U12
U11
U10
R268
R267
R266
R265
R264
R263
R262
R261
6.8K
R104
R102
R100
R98
R96
R94
R92
R90
1N4148
D227
D226
D225
D224
D223
D222
D221
D220
HCT273
U18
D7
D6
D5
D4
D3
D2
D1
D0
LMPDRV
(4-4C) AUXLMP
(4-1C) LST
(4-1C) LMPDRV
(1-1D,2-4A,3-4B,4-1D) RESET
(1-1D,3-4B,4-4B) D0-D7
(4-1C) LMPSTB
(4-1D) DRV0
The above circuit(s) continue at the address shown (#-XY).
= Sheet Number (1-5), X = Column Grid, Y = Row Grid

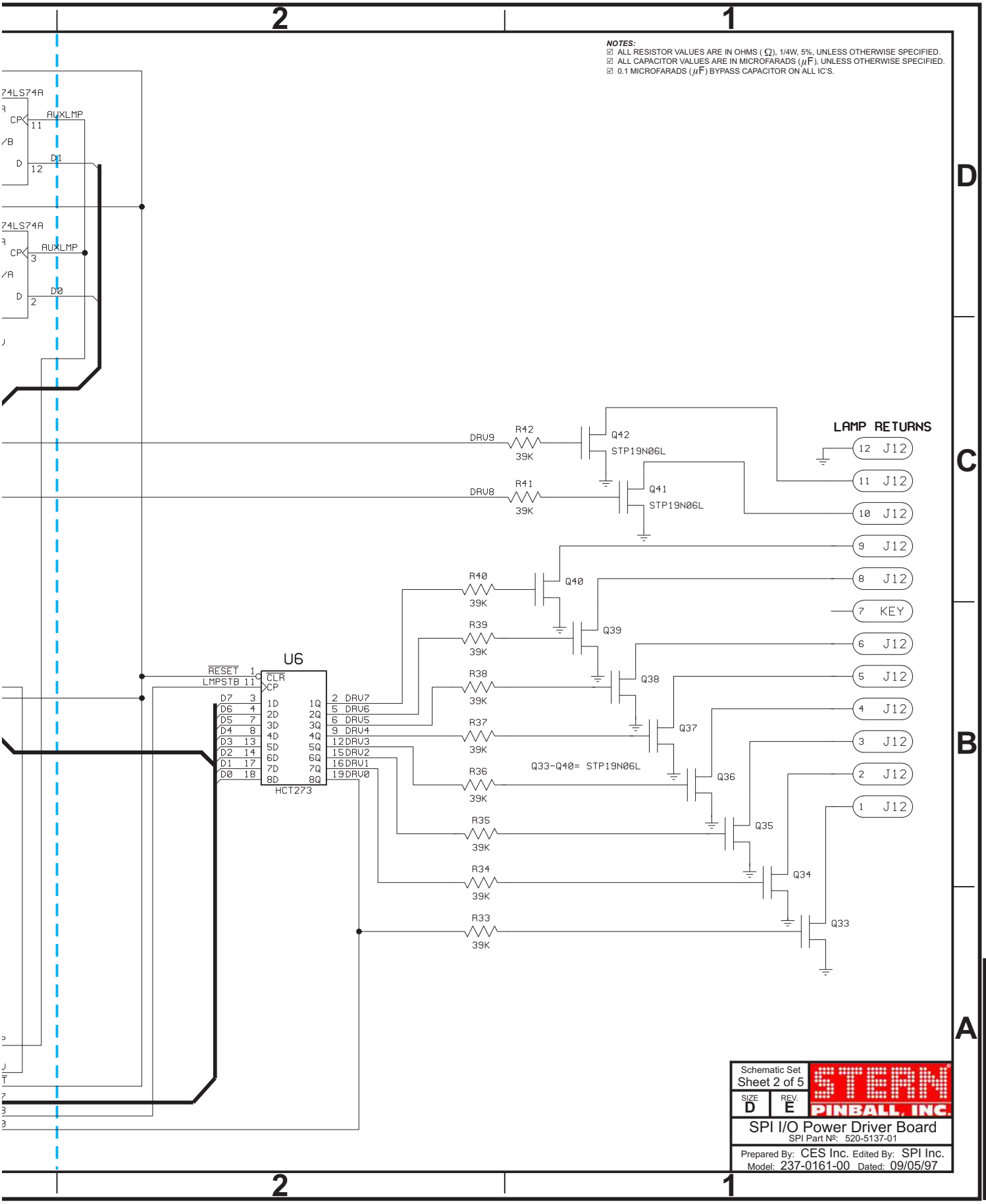
NOTES:
☑ ALL RESISTOR VALUES ARE IN OHMS (Ω), 1/4W, 5%, UNLESS OTHERWISE SPECIFIED.
☑ ALL CAPACITOR VALUES ARE IN MICROFARADS (μF), UNLESS OTHERWISE SPECIFIED.
☑ 0.1 MICROFARADS (μF) BYPASS CAPACITOR ON ALL IC'S.
74LS74A
AUXLMP
D1
D0
DRV9
DRV8
R42
R41
39K
Q42
Q41
STP19N06L
LAMP RETURNS
12 J12
11 J12
10 J12
9 J12
8 J12
7 KEY
6 J12
5 J12
4 J12
3 J12
2 J12
1 J12
R40
R39
R38
R37
R36
R35
R34
R33
Q40
Q39
Q38
Q37
Q36
Q35
Q34
Q33
Q33-Q40= STP19N06L
U6
RESET
LMPSTB
CLR
CP
HCT273
DRV7
DRV6
DRV5
DRV4
DRV3
DRV2
DRV1
DRV0
Schematic Set
Sheet 2 of 5
SIZE D
REV. E
STERN PINBALL, INC.
SPI I/O Power Driver Board
SPI Part №: 520-5137-01
Prepared By: CES Inc. Edited By: SPI Inc.
Model: 237-0161-00 Dated: 09/05/97

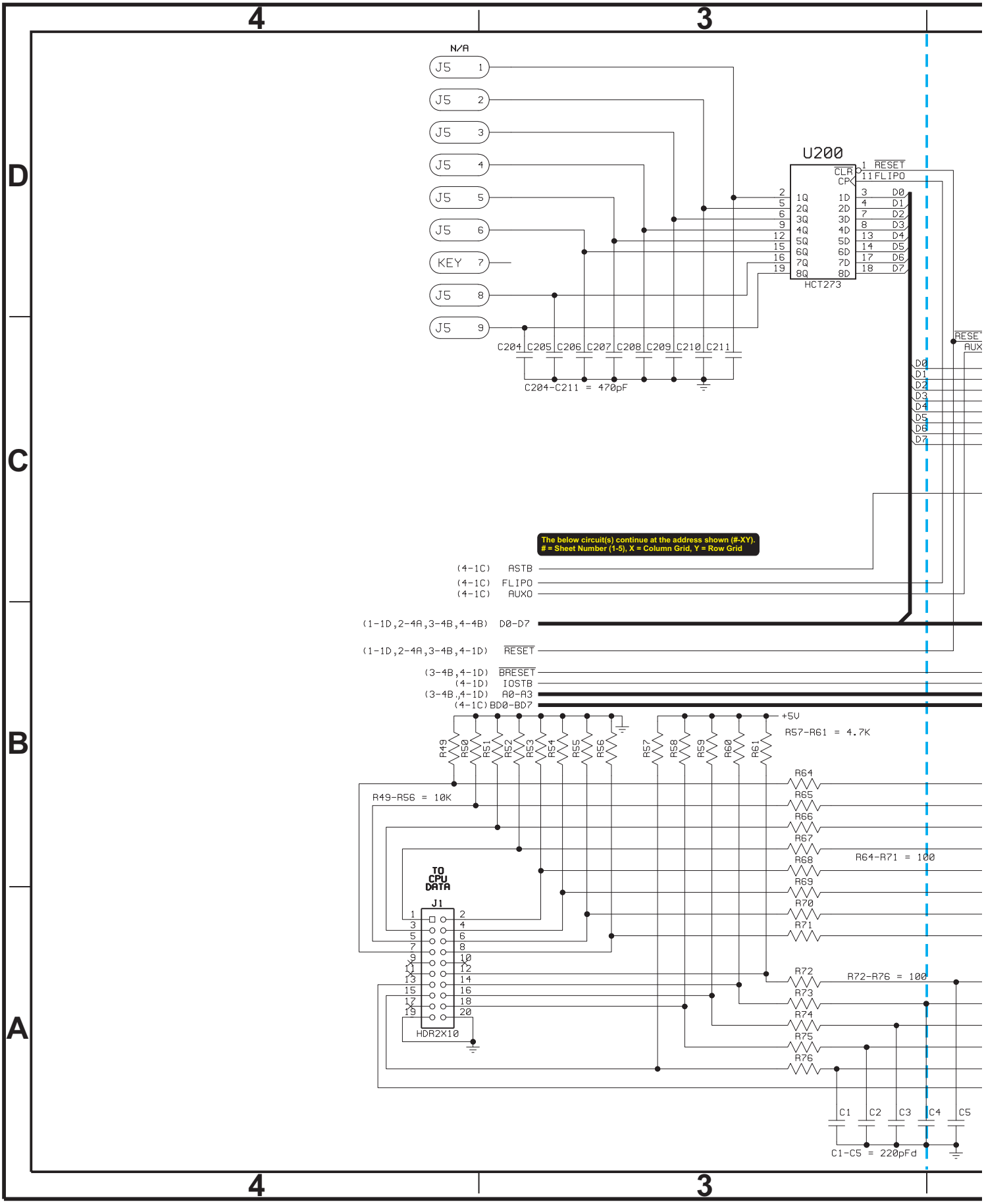
4
3
D
C
B
A
N/A
J5 1
J5 2
J5 3
J5 4
J5 5
J5 6
KEY 7
J5 8
J5 9
U200
HCT273
CLR
CP
1 RESET
11 FLIPO
1Q 2Q 3Q 4Q 5Q 6Q 7Q 8Q
1D 2D 3D 4D 5D 6D 7D 8D
D0 D1 D2 D3 D4 D5 D6 D7
C204 C205 C206 C207 C208 C209 C210 C211
C204-C211 = 470pF
RESET
AUX
The below circuit(s) continue at the address shown (#-XY).
= Sheet Number (1-5), X = Column Grid, Y = Row Grid
(4-1C) ASTB
(4-1C) FLIPO
(4-1C) AUXO
(1-1D,2-4A,3-4B,4-4B) D0-D7
(1-1D,2-4A,3-4B,4-1D) RESET
(3-4B,4-1D) BRESET
(4-1D) IOSTB
(3-4B,4-1D) A0-A3
(4-1C) BD0-BD7
+5V
R49 R50 R51 R52 R53 R54 R55 R56
R57 R58 R59 R60 R61
R57-R61 = 4.7K
R49-R56 = 10K
R64 R65 R66 R67 R68 R69 R70 R71
R64-R71 = 100
R72 R73 R74 R75 R76
R72-R76 = 100
TO CPU DATA
J1
HDR2X10
C1 C2 C3 C4 C5
C1-C5 = 220pFd

NOTES:
- ☑ ALL RESISTOR VALUES ARE IN OHMS (Ω), 1/4W, 5%, UNLESS OTHERWISE SPECIFIED.
- ☑ ALL CAPACITOR VALUES ARE IN MICROFARADS (μF), UNLESS OTHERWISE SPECIFIED.
- ☑ 0.1 MICROFARADS (μF) BYPASS CAPACITOR ON ALL IC'S.

DATE	DESCIRIPTION OF CHANGES / REVISIONS	REQ.	BY.
JAN 2001	Cut trace on solder side at Aux. Out Port J2-PIN1 thru J2-PIN3 & J2-PIN5 thru J2-PIN9; Soldered **Resistor 100Ω** 1/4W 5% (SPI Nº: 121-5007-00). This Modification (highlighted below at J2 with a dotted-line box) was accomplished on boards produced after Jan. 1, 2001. This board is backwards compatible for the White Star™ Board System.	TS	JET

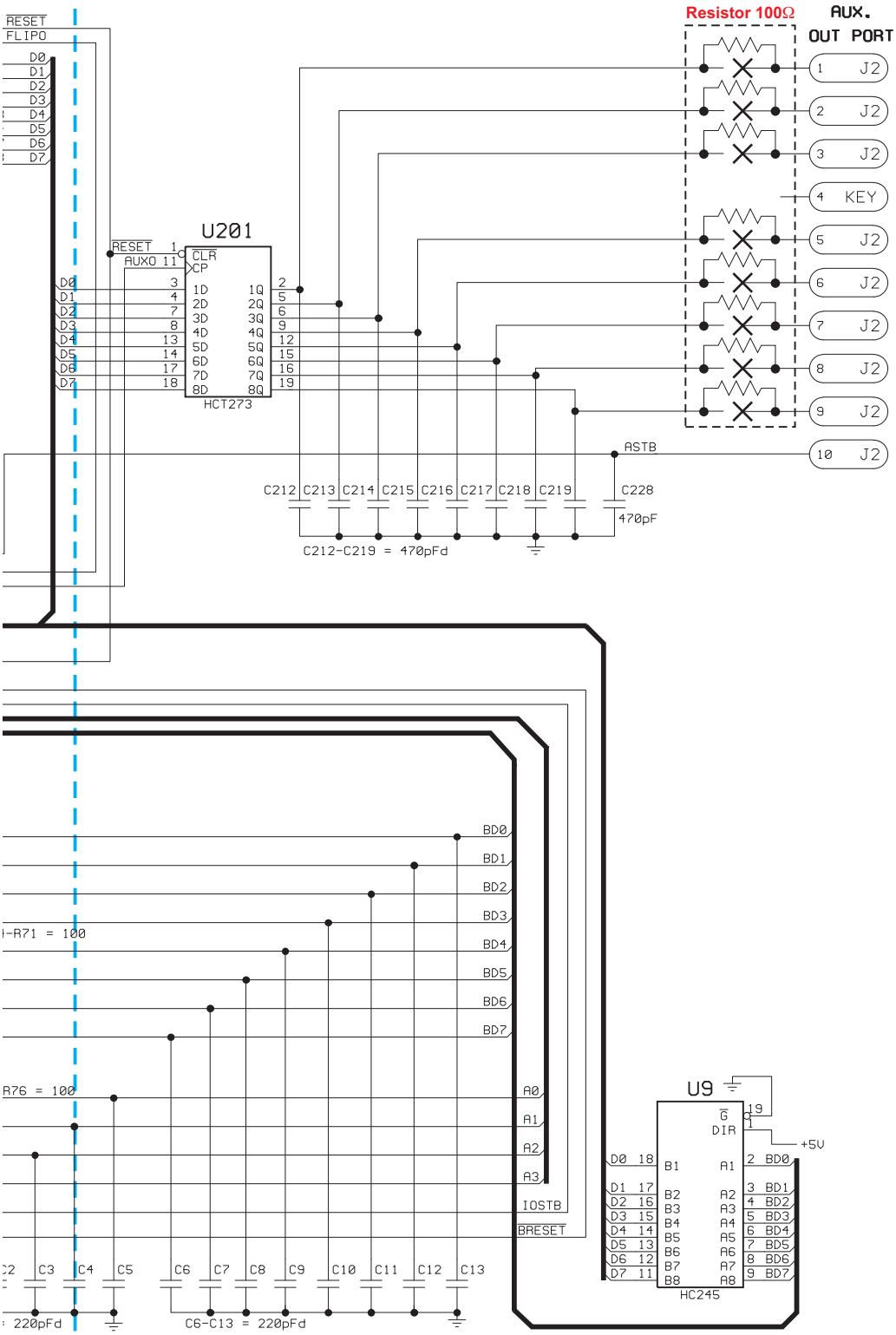

Schematic Set	
Sheet 3 of 5	STERN PINBALL, INC.
SIZE D	REV. E

SPI I/O Power Driver Board
SPI Part Nº: 520-5137-01

Prepared By: CES Inc. Edited By: SPI Inc.
Model: 237-0161-00 Dated: 09/05/97

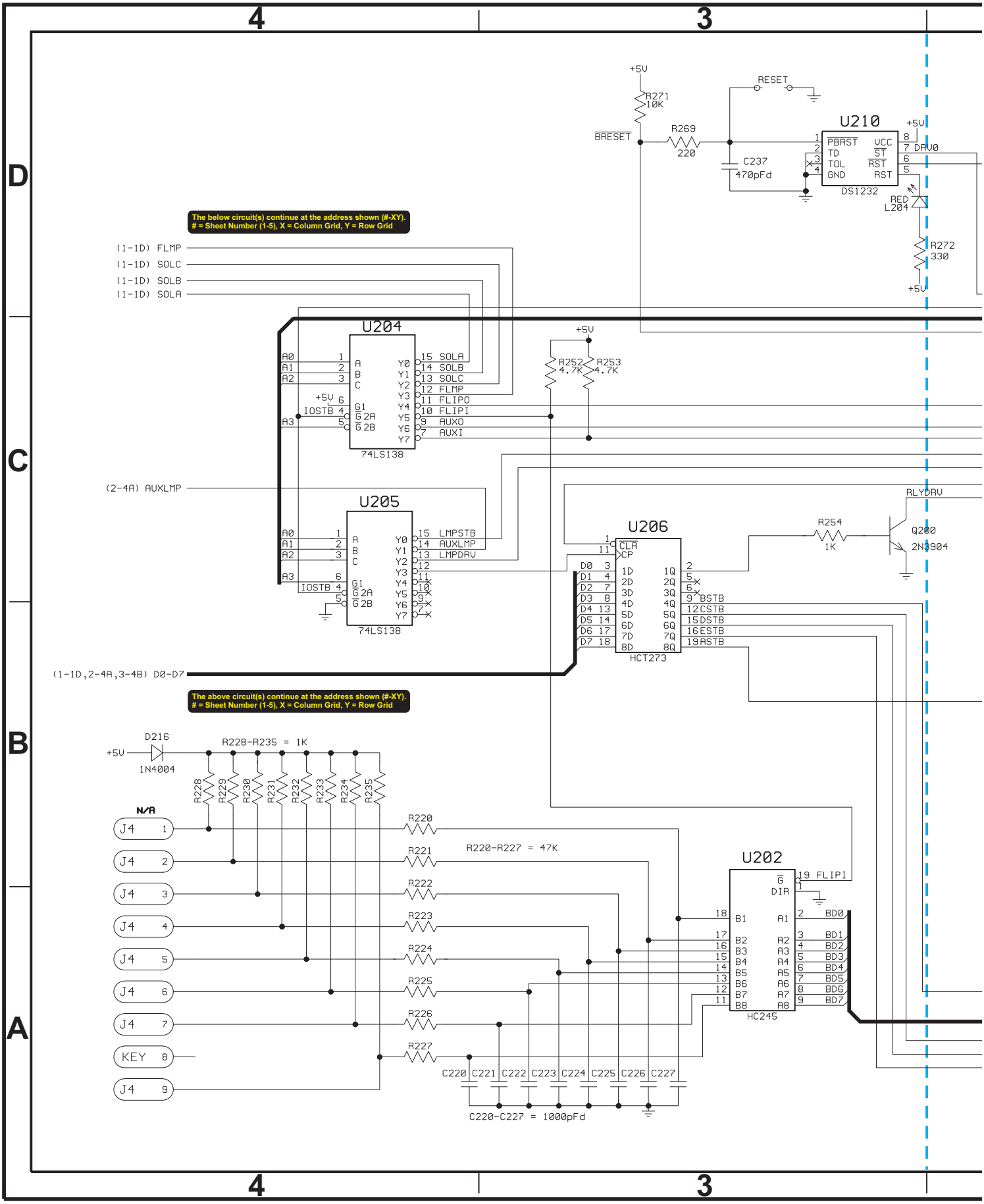
4
3
D
C
B
A
+5V
R271
10K
RESET
BRESET
R269
220
C237
470pFd
U210
PBRST
TD
TOL
GND
VCC
ST
RST
RST
DS1232
DRV0
RED
L204
R272
330
The below circuit(s) continue at the address shown (#-XY).
= Sheet Number (1-5), X = Column Grid, Y = Row Grid
(1-1D) FLMP
(1-1D) SOLC
(1-1D) SOLB
(1-1D) SOLA
U204
A0
A1
A2
A3
IOSTB
G1
G 2A
G 2B
Y0
Y1
Y2
Y3
Y4
Y5
Y6
Y7
SOLA
SOLB
SOLC
FLMP
FLIPO
FLIPI
AUXO
AUXI
74LS138
R252
4.7K
R253
4.7K
(2-4A) AUXLMP
U205
LMPSTB
AUXLMP
LMPDRV
74LS138
U206
CLR
CP
D0
D1
D2
D3
D4
D5
D6
D7
1D
2D
3D
4D
5D
6D
7D
8D
1Q
2Q
3Q
4Q
5Q
6Q
7Q
8Q
BSTB
CSTB
DSTB
ESTB
ASTB
HCT273
R254
1K
RLYDRV
Q200
2N3904
(1-1D,2-4A,3-4B) D0-D7
The above circuit(s) continue at the address shown (#-XY).
= Sheet Number (1-5), X = Column Grid, Y = Row Grid
D216
1N4004
R228-R235 = 1K
R228
R229
R230
R231
R232
R233
R234
R235
N/A
J4 1
J4 2
J4 3
J4 4
J4 5
J4 6
J4 7
KEY 8
J4 9
R220
R221
R222
R223
R224
R225
R226
R227
R220-R227 = 47K
U202
G
DIR
FLIPI
B1
B2
B3
B4
B5
B6
B7
B8
A1
A2
A3
A4
A5
A6
A7
A8
BD0
BD1
BD2
BD3
BD4
BD5
BD6
BD7
HC245
C220
C221
C222
C223
C224
C225
C226
C227
C220-C227 = 1000pFd

DATE	DESCIRIPTION OF CHANGES / REVISIONS	REQ.	BY.
02-13-95	DELETE "-12V" NET FROM POSITIVE PIN OF C29. ADD "GND" NET TO POSITIVE PIN OF C29. MERGE UNNAMED NET FROM NEGATIVE PIN OF C29 WITH "-12V" NET.	BK	JHS
05-25-99	CUT PIN-3 TO GND ON U210 (4-3D)		

NOTES:
- ☑ ALL RESISTOR VALUES ARE IN OHMS (Ω), 1/4W, 5%, UNLESS OTHERWISE SPECIFIED.
- ☑ ALL CAPACITOR VALUES ARE IN MICROFARADS (μF), UNLESS OTHERWISE SPECIFIED.
- ☑ 0.1 MICROFARADS (μF) BYPASS CAPACITOR ON ALL IC'S.

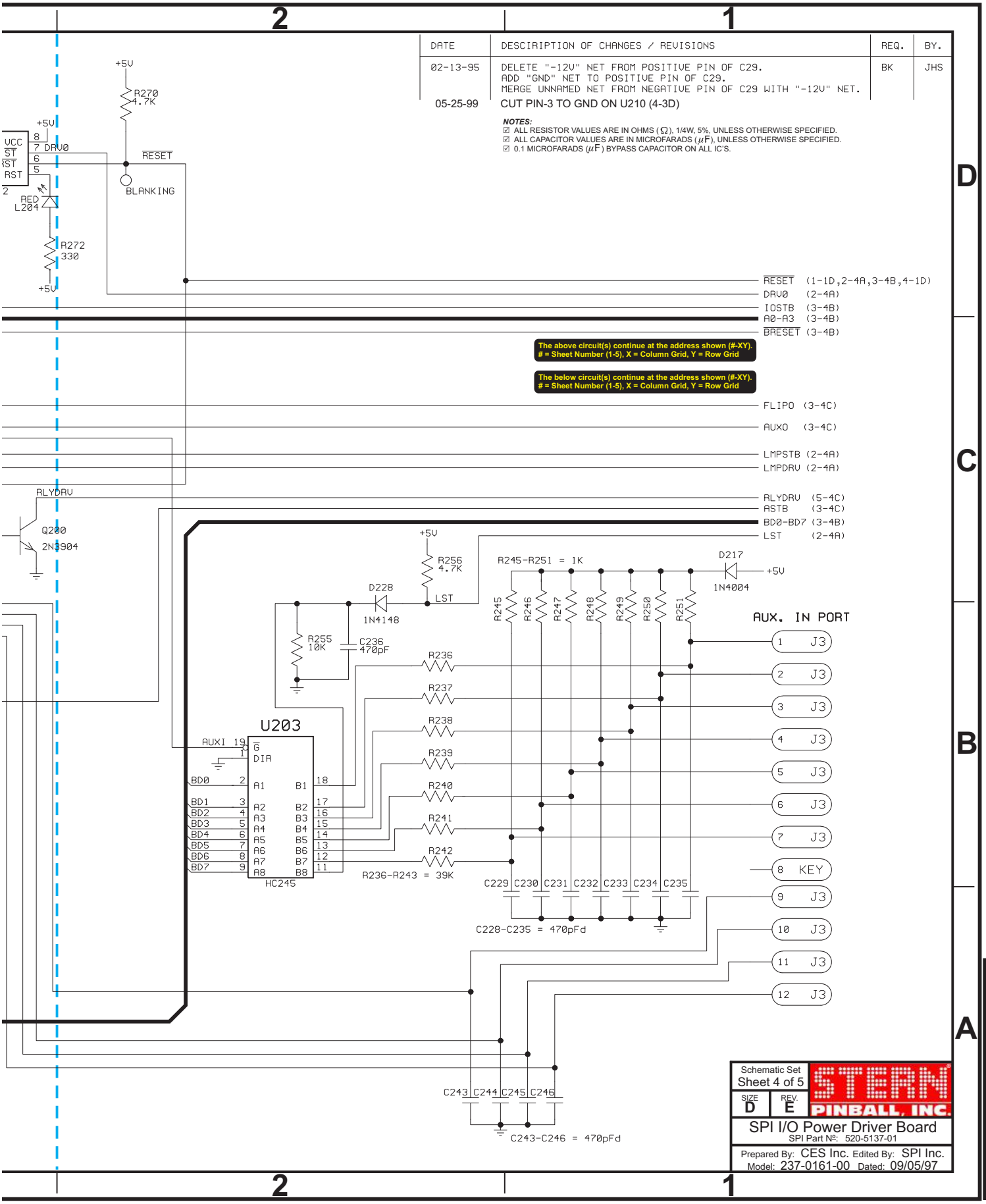

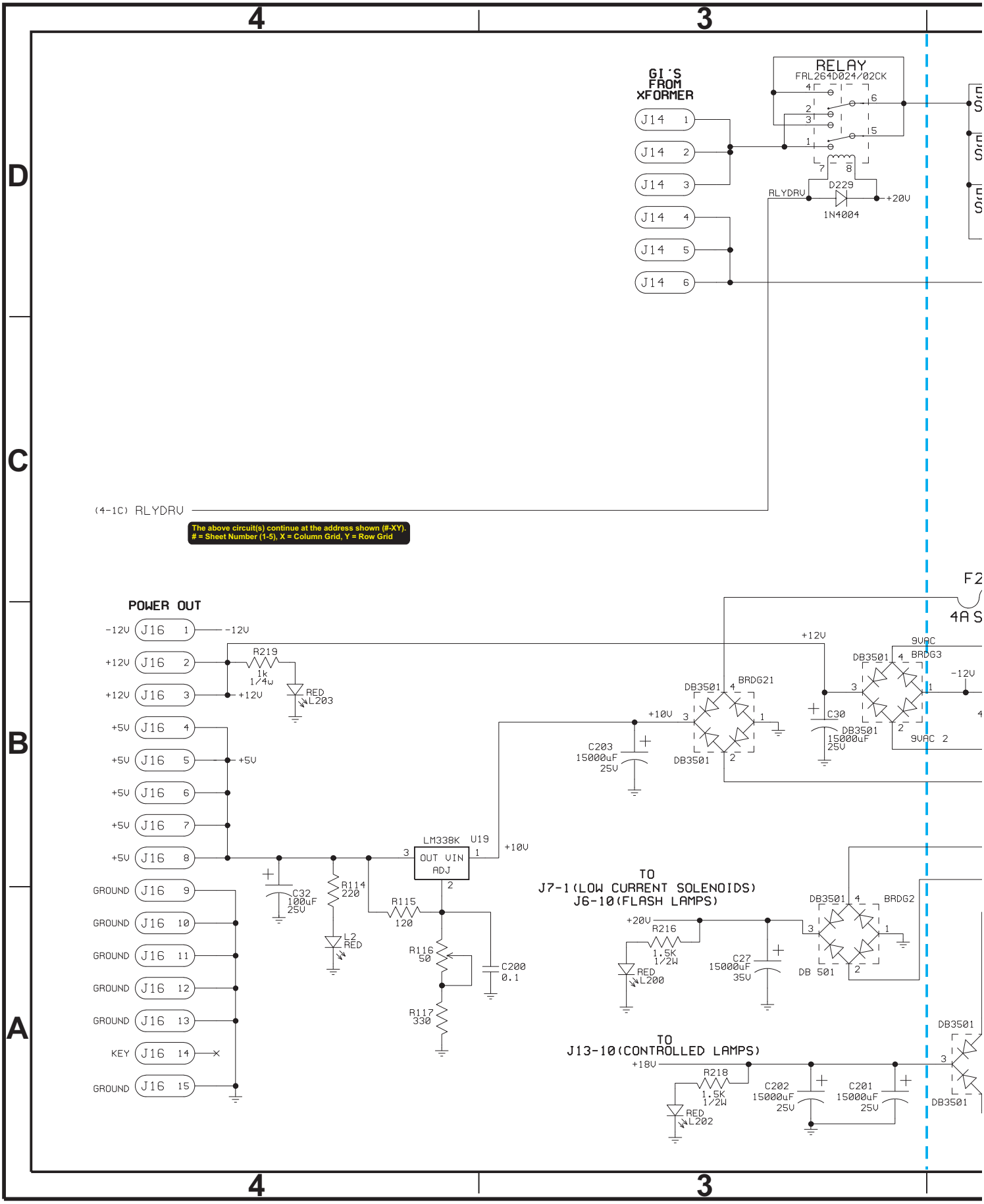
4
3
D
C
B
A
GI'S FROM XFORMER
J14 1
J14 2
J14 3
J14 4
J14 5
J14 6
RELAY
FRL264D024/02CK
RLYDRV
D229
1N4004
+20V
(4-1C) RLYDRV
The above circuit(s) continue at the address shown (#-XY).
= Sheet Number (1-5), X = Column Grid, Y = Row Grid
POWER OUT
-12V J16 1
+12V J16 2
+12V J16 3
+5V J16 4
+5V J16 5
+5V J16 6
+5V J16 7
+5V J16 8
GROUND J16 9
GROUND J16 10
GROUND J16 11
GROUND J16 12
GROUND J16 13
KEY J16 14
GROUND J16 15
R219
1k
1/4w
RED
L203
C32
100uF
25V
R114
220
L2
RED
R115
120
R116
50
R117
330
C200
0.1
LM338K U19
OUT VIN
ADJ
+10V
C203
15000uF
25V
DB3501
BRDG21
C30
15000uF
25V
9VAC
BRDG3
F2
4A S
TO
J7-1(LOW CURRENT SOLENOIDS)
J6-10(FLASH LAMPS)
R216
1.5K
1/2W
RED
L200
C27
15000uF
35V
BRDG2
DB 501
TO
J13-10(CONTROLLED LAMPS)
+18V
R218
1.5K
1/2W
RED
L202
C202
15000uF
25V
C201
15000uF
25V

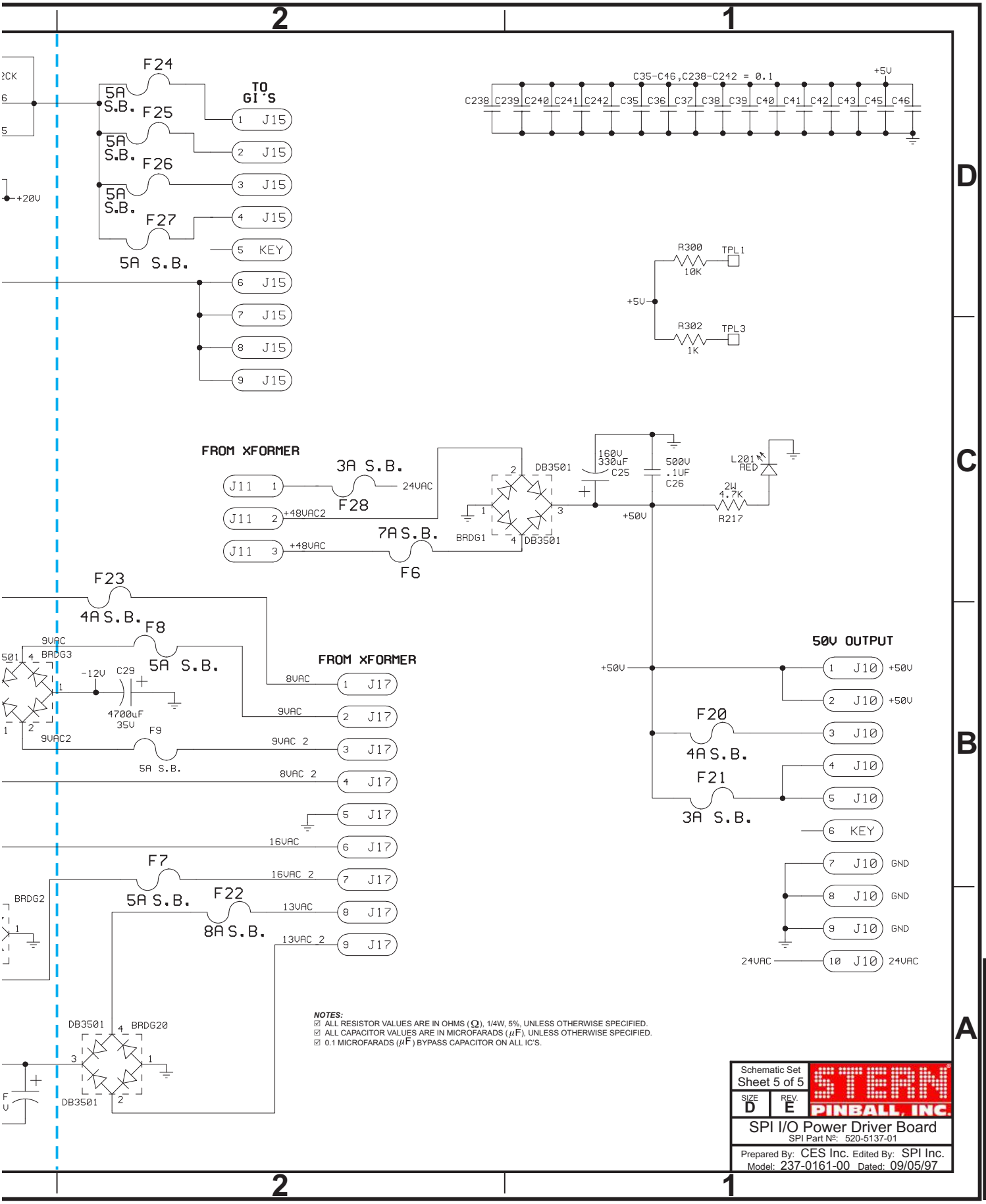
2
1
D
C
B
A
F24
5A S.B.
F25
5A S.B.
F26
5A S.B.
F27
5A S.B.
TO GI'S
J15
KEY
+20V
C35-C46,C238-C242 = 0.1
+5V
C238 C239 C240 C241 C242 C35 C36 C37 C38 C39 C40 C41 C42 C43 C45 C46
R300 10K TPL1
R302 1K TPL3
FROM XFORMER
J11
3A S.B.
F28
24VAC
+48VAC2
7A S.B.
F6
+48VAC
DB3501
BRDG1
160V 330uF C25
500V .1UF C26
+50V
L201 RED
2W 4.7K R217
F23
4A S.B.
F8
5A S.B.
9VAC
BRDG3
-12V
C29
4700uF 35V
9VAC2
F9
5A S.B.
FROM XFORMER
8VAC
9VAC
9VAC 2
8VAC 2
16VAC
16VAC 2
13VAC
13VAC 2
J17
F7
5A S.B.
F22
8A S.B.
BRDG2
DB3501
BRDG20
50V OUTPUT
J10
+50V
F20
4A S.B.
F21
3A S.B.
GND
24VAC
NOTES:
ALL RESISTOR VALUES ARE IN OHMS (Ω), 1/4W, 5%, UNLESS OTHERWISE SPECIFIED.
ALL CAPACITOR VALUES ARE IN MICROFARADS (μF), UNLESS OTHERWISE SPECIFIED.
0.1 MICROFARADS (μF) BYPASS CAPACITOR ON ALL IC'S.
Schematic Set
Sheet 5 of 5
SIZE D
REV. E
STERN PINBALL, INC.
SPI I/O Power Driver Board
SPI Part №: 520-5137-01
Prepared By: CES Inc. Edited By: SPI Inc.
Model: 237-0161-00 Dated: 09/05/97

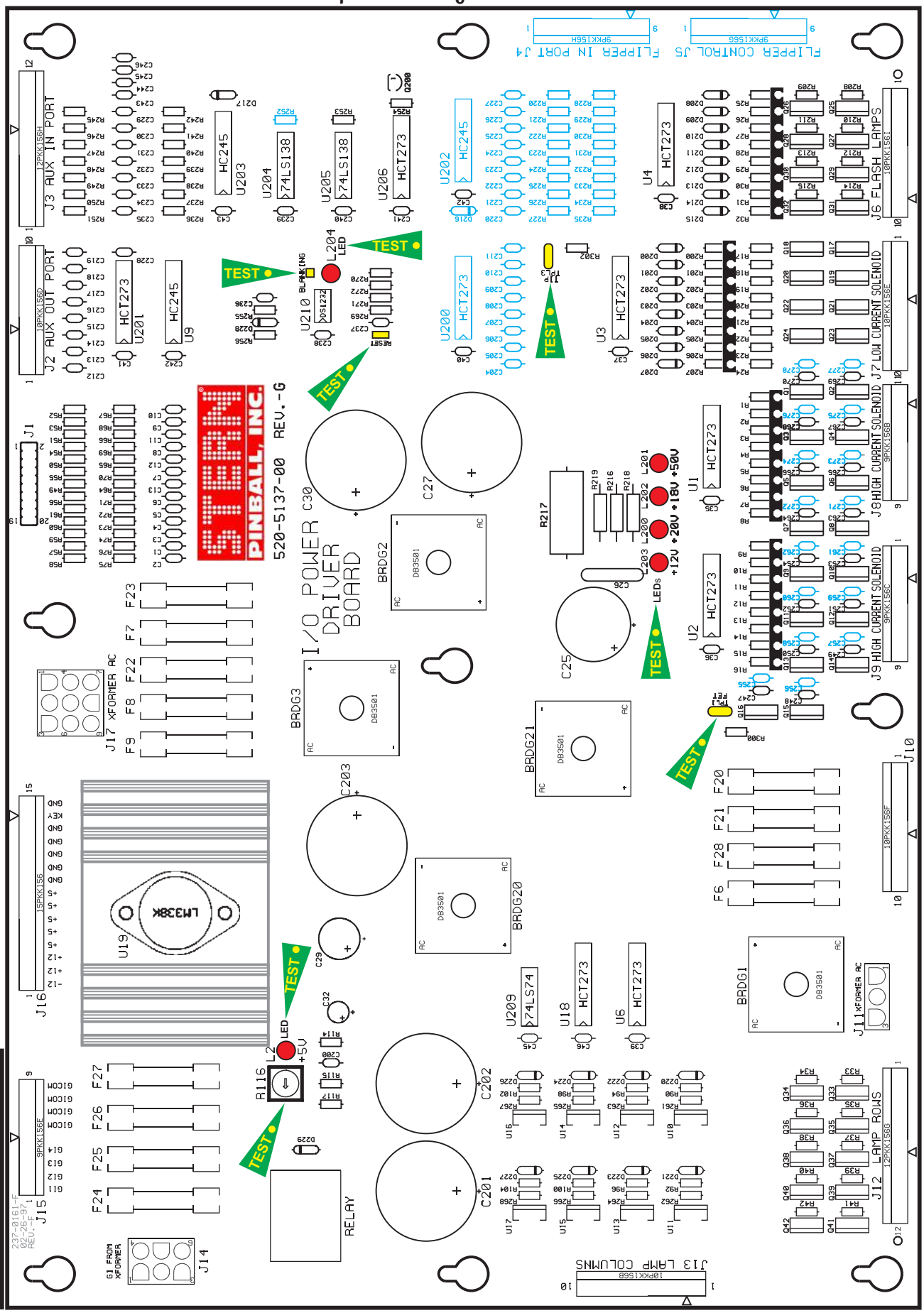

Test Points:

TEST

←TIP TPL3
←BLANKING
←L204 LED

←RESET

LEDs :
←L201+50v
←L202+18v
←L200+20v
←L203+12v

←FET TPL1

LED :
←L2+5V
←R116 POT

Actual Board Size 15.698" X 11"

I/O Power Driver Board Parts

ITEM	QTY	PART NUMBER	REF-DESIGNATOR	DESCRIPTION (NS = Not Stuffed)
—	**1**	**520-5137-01**	**I/O Power Driver Board Rev. G**	**Complete PCB Assembly**
01	5	112-5000-00	BRDG1, BRDG2, BRDG3, BRDG20, BRDG21	DB3501
02	13	125-5030-00	C1, C2, C3>C6, C7, C8, C9>C10, C11, C12	220pF, (221), Cap.
03	1	125-5033-00	C25	100uF, 150v, Radial Lytic Cap.
04	1	125-5035-00	C26	.1UF, 500v, Ceramic Disk Cap.
05A	4	125-5036-00	C30, C201, C202, C203	15000uF, 25v, Radial Lytic Cap.
05B	1	125-5036-01	C27	15000uF, **35v**, Radial Lytic Cap.
06	1	125-5034-00	C29	4700uF, 35v, Radial Lytic Cap.
07	1	125-5032-00	C32	100uF, 25v, Radial Lytic Cap.
08	17	125-5031-00	C35, C36, C37, C38, C39, C40, C41, C42, C43, C45, C46, C200, C238, C239, C240, C241, C242	0.1uF, (104), Cap.
09	22	125-5028-00	C212>C219, C228>C237, C243>C246 (C204-C211: NS)	470pF, (471), Axial Cap.
10	0	n/a	(C220>C227: NS)	
11	16	125-5029-00	C247>C254, C263>C270	0.01uF, (103), 100v Cap.
12	0	125-5027-00	(C255>C262, C271>C278: NS)	0.1uF, (104), 100v, Cap.
13	25	112-0054-00	D200>D207, D208>D215, D220, D221, D222, D223, D224, D225, D226, D227	1N4148, Diode
14	2	112-5003-00	D217, D229 (D216: NS)	1N4004, Diode
15	26	205-0004-00	F6, F7, F8, F9, F20, F21, F22, F23, F24> F27, F28	Fuse Clips
16	1	200-5000-03	F6	7A 250v S.B. Fuse
17	7	200-5000-01	F7, F8, F9, F24>F27	5A 250v S.B. Fuse
18	2	200-5000-08	F21, F28	3A 250v S.B. Fuse
19	1	200-5000-05	F22	8A 250v S.B. Fuse
20	2	200-5000-06	F20, F23	4A 250v S.B. Fuse
21	1	045-5015-01	J1	20-Pin, 0.1 Dual Row Header
22	1	045-5014-01	J2 (Key Pin-4), J6 (Key Pin-9), J7 (Key Pin-5) J10 (Key Pin-6), J13 (Key Pin-2)	10PKK156
23	1	045-5015-00	J3 (Key Pin-8)	12PKK156
	0	n/a	(J4, J5: NS)	
24	1	045-5013-00	J8 (Key Pin-2), J9 (Key Pin-3), J15 (Key Pin-5)	9PKK156
25	1	045-0014-03	J11	10-84-4030 (3-Pin MOLEX)
26	1	045-5015-00	J12 (Key Pin-7)	12PKK156
27	1	045-0014-06	J14	10-84-4060 (6-Pin MOLEX)
28	1	045-5016-00	J16 (Key Pin-14)	15PKK156
29	1	045-0014-09	J17	10-84-4090 (9-Pin MOLEX)
30	**6**	**165-5099-00**	**L2, L200, L201, L202, L203, L204**	**LED T1-3/4 DIFFUSER LED**
31	16	110-0106-00	Q1>Q16	22NE10L STP, Transistor
32	16	110-0067-00	Q17>Q24, Q25>Q32	TIP122
33	10	110-0088-00	Q33>Q42	19N06L STP, Transistor
34	1	110-0069-00	Q200	2N3904, Transistor.
35	32	121-5042-00	R1>R8, R9>R16, R200>R207, R208>R215	22K Ω 1/4W Res.
36	16	121-5003-00	R17>R24, R25>R32	620 Ω 1/4W Res.
37	17	121-5045-00	R33>R42, R236>R242	39K Ω 1/4W Res.
38	8	121-5021-00	R49, R57>R61, R253, R256, R270 (R252: NS)	4.7K Ω 1/4W Res.
39	11	121-5011-00	R50>R56, R255, R271, R300	10K Ω 1/4W Res.
40	13	121-5007-00	R64>R76	100 Ω 1/4W Res.
			Resistors on Solder Side @ J2-Pins: 1-3 & 5-9	
41	8	121-5029-00	R90, R92, R94, R96, R98, R100, R102, R104	6.8K Ω 1/4W Res.
42	2	121-5033-00	R114, R269	220 Ω 1/4W Res.
43	1	121-5030-00	R115	120 Ω 1/4W Res.
44	1	121-5039-00	R116	50 Ω Pot
45	2	121-5036-00	R117, R272	330 Ω 1/4W Res.
46	2	121-5038-00	R216, R218	1.5K Ω 1/2W Res.
47	1	121-5050-00	R217	4.7K Ω 2W Res. (SANDBAR)
48	1	121-5009-00	R219, R245>R251, R254, R302 (R228>R235: NS)	1K Ω 1/4W Res.
49	8	121-5016-00	R261, R262, R263, R264, R265, R266, R267, R268	47 Ω 1/4W Res.
50	1	190-5002-00	RELAY	FRL264D024/02CK Relay
51	2	n/a	TPL1, TPL3	*Test Point Wire (24ga.) Loops*
52	8	100-5012-00	U1, U2, U3, U4, U6, U18, U201, U206 (U200: NS)	74HCT273
53	1	110-0058-00	U9	74LS245
54	1	100-5023-00	U210	DS1232
55	8	110-0089-00	U10, U11, U12, U13, U14, U15, U16, U17	VN02N
56	1	100-0356-00	U19	LM338K
57	1	n/a	U19	Heatsink (5v Reg.)
58	1	100-0338-00	U203 (U202: NS)	74HC245
59	2	100-0148-00	U204, U205	74LS138
60	1	100-0037-00	U209	74LS74
61	1	n/a	BLANKING, RESET	*Test Points*

NASCAR
PIT ROAD
SHORT TRACK
SHORT
JACK POT
COLLECT R-A-C-E
HARD RACING
250K
200K
150K
100K
RACE POSITION
LOCK
MULTI BALL
BONUS JACKPOT
SPEED SHOTS
2X HAULER MILES
ROAD COURSE
VICTORY LAP
MODE BONUS
EXTRA BALL
SPIN
R A C E
C H A M P #1
HAPPY HOUR
GAS 'N GO
INFIELD PARTY
SUPER FAN
SHORT TRACK
RIGHT SIDES ONLY
TEST CAR
BUMP 'N RUN
LIGHT EXTRA BALL
HAULER RIDE
NASCAR PACE CAR
SHOOT AGAIN
HOLD EITHER FLIPPER FOR INSTANT INFO
HOLD EITHER FLIPPER FOR INSTANT INFO
50¢ = x1
SUPER VALUE
$2.00 = x5
NASCAR

CPU Section:

The **CPU** is a **68B09E** (**U209**) with up to 8 MBytes of **CPU** *Code Space* (**U210**). The **CPU** code is bank selected by the use of **U211** and each bank consists of 16 KBytes. 8 KBytes of **RAM** (**U212**) is available to the **CPU**. The RAM is battery backed and has a write protected area. Battery back up is accomplished by **3-AA Cells** (**BAT1**) Battery Pack which has a **TEST POINT (TP): VBATT** to check the battery voltage status. The write protected area consists of 512 Bytes used for storing game settings. This section of **RAM** can only be written to when the coin door is open. The Coin Door switch comes into the **CPU** on **CN6-12** and is fed into the address decoding **PAL U213**. When this memory protect signal is low writes to the protected **RAM** area are prohibited. Address decoding for the system is accomplished by one **PAL U213** and one 1-of-8 decoder **U214**.

A watchdog is used to monitor the **CPU** and the 5v supply. If the 5v supply is below 4.75 the watchdog will hold the **CPU/Sound Board** & **I/O Board** in *reset*. The watchdog must be fed at a rate of ***250ms*** or faster. The signal used to feed the watchdog comes from the EPROM Bank select signal used to load **U211**.

The **I/O** Interface **CN1** is buffered by two (2) **HC245** Chips (**U207 & U208**). The **CPU**'s reset line is buffered by **Q10** and fed over to the **I/O** through **CN1**. An I*/O Strobe Signal* is fed through **CN1-15** and is used to notify the **I/O** that a valid address is being sent.

Switches:

The Switch Matrix consists of eight (8) **2N3904** Transistors(**Q1-Q8**) which pull one of 8 strobes 'low' to *activate* a Single Column of switches. The *Switch Return Signals* are fed into **CN7** [SWITCH ROWS] and are highly filtered and compared to a 2.5v *reference voltage*. The *Switch Return Voltage* must be below 2.5v to make a *Valid Switch Closure*. If *false switches* are appearing, check that none of the **2N3904** Transistors are permanently pulling the *strobe line low*. Only one strobe from **CN5** [SWITCH COLUMNS] should be *low at any time*. **CN6** [DEDICATED SWITCH IN] is a *Dedicated Bank of Input Switches*. Switches connected to **CN6** are connected to ground instead of a strobe and may be read at any time.

Plasma Interface:

The data path for communication to and from the **Plasma Controller Board** is 8 bits wide. There are separate *Input* and *Output Busses*. Data going out to the controller comes from the **CPU**'s *Data Bus* through **U201** and onto **CN8-Pins 11-18**. Status back from the Plasma Controller comes in on **CN8-Pins 22-26** and is fed into **U202** for input to the **CPU**'s *Data Bus*. Two control signals that go out to the Plasma Controller are **PRES** [TP17: PLASMA RESET] and **CN8-Pin 19** [**PSTB** - *Plasma Strobe*]. The Plasma Reset is software controllable through **U216/B** and also has a test point "Plasma Reset". The *Plasma Strobe Signal* to the controller is generated from **U216/A** and is *used to latch data* into the Plasma Controller.

Other Test Points (TP):

TP 7: E & **TP5: Q** - The **CPU** signals for both **68B09E** processors. Should be at 2Mhz with **Q** leading **E** by ***500 nsec***. **TP2: P0. TP3: P1. TP4: P2. TP20:** *(near U402)***. TP8:** *(near U219)***. TP1: +3.3V.**

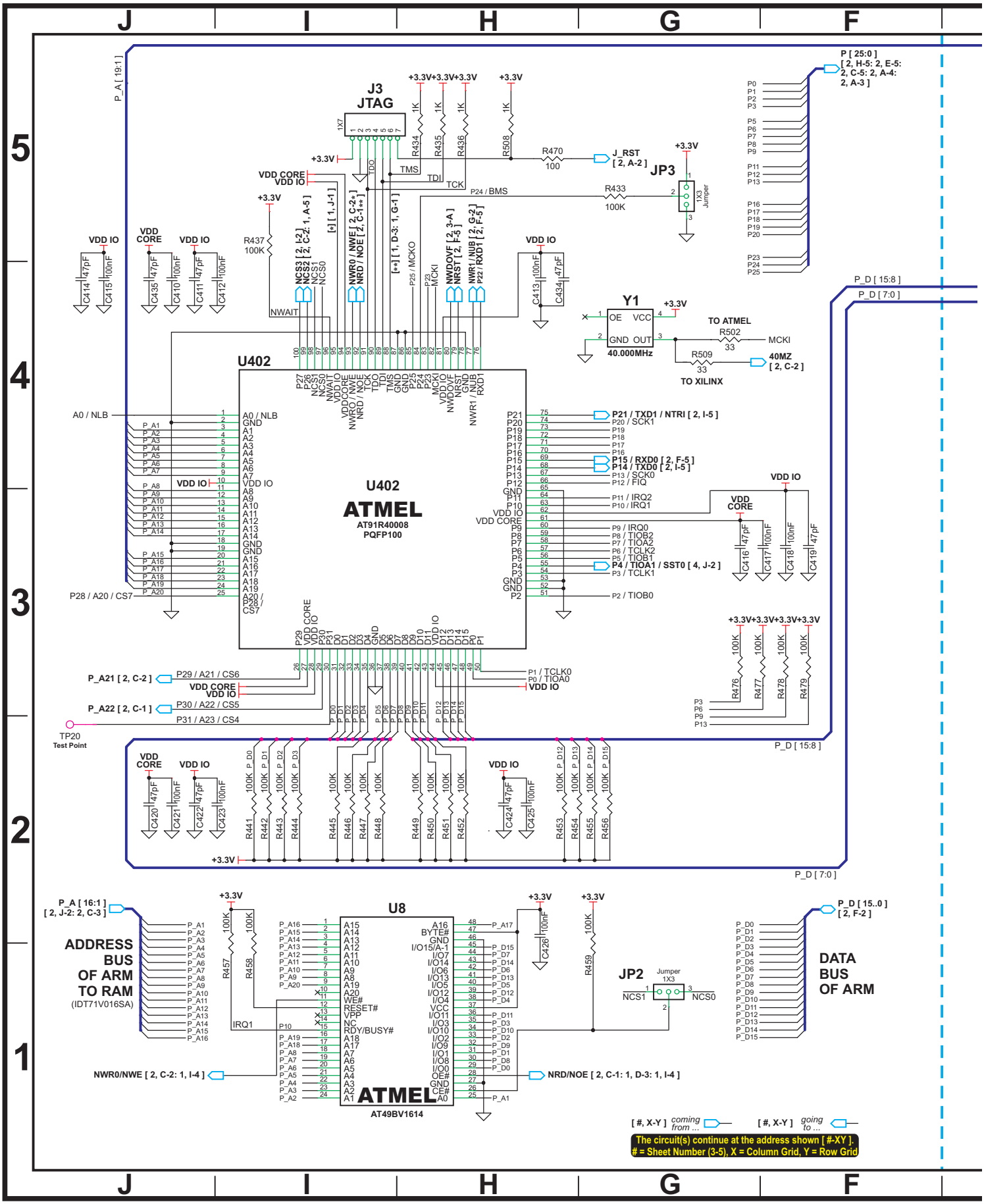
J3
JTAG
U402
ATMEL
AT91R40008
PQFP100
Y1
40.000MHz
TO ATMEL
TO XILINX
JP3
JP2
U8
ATMEL
AT49BV1614
ADDRESS BUS OF ARM TO RAM
(IDT71V016SA)
DATA BUS OF ARM
TP20
Test Point
The circuit(s) continue at the address shown [#-XY].
= Sheet Number (3-5), X = Column Grid, Y = Row Grid

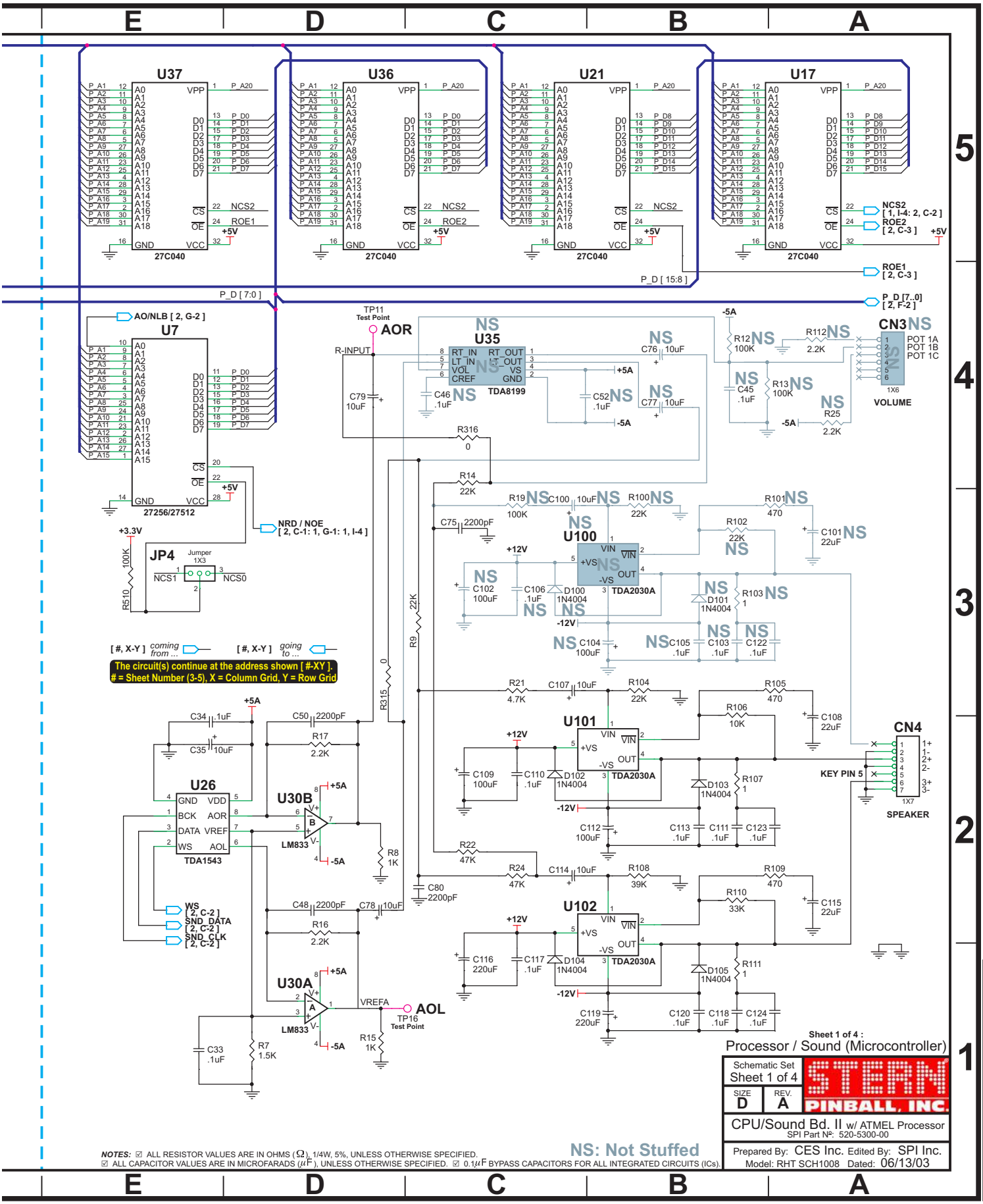
U37
U36
U21
U17
27C040
P_D [15:8]
P_D [7:0]
P_D [7..0] [2, F-2]
ROE1 [2, C-3]
NCS2 [1, I-4: 2, C-2]
ROE2 [2, C-3]
AO/NLB [2, G-2]
U7
27256/27512
NRD / NOE [2, C-1: 1, G-1: 1, I-4]
JP4
Jumper 1X3
NCS1
NCS0
TP11 Test Point
AOR
R-INPUT
U35
TDA8199
CN3
POT 1A
POT 1B
POT 1C
1X6
VOLUME
U100
U101
U102
TDA2030A
CN4
KEY PIN 5
SPEAKER
1X7
U26
TDA1543
U30B
U30A
LM833
WS [2, C-2]
SND_DATA [2, C-2]
SND_CLK [2, C-2]
AOL
TP16 Test Point
[#, X-Y] coming from ...
[#, X-Y] going to ...
The circuit(s) continue at the address shown [#-XY].
= Sheet Number (3-5), X = Column Grid, Y = Row Grid
NS: Not Stuffed
Sheet 1 of 4 :
Processor / Sound (Microcontroller)
Schematic Set Sheet 1 of 4
SIZE D
REV. A
STERN PINBALL, INC.
CPU/Sound Bd. II w/ ATMEL Processor
SPI Part №: 520-5300-00
Prepared By: CES Inc. Edited By: SPI Inc.
Model: RHT SCH1008 Dated: 06/13/03
NOTES: ☑ ALL RESISTOR VALUES ARE IN OHMS (Ω), 1/4W, 5%, UNLESS OTHERWISE SPECIFIED.
☑ ALL CAPACITOR VALUES ARE IN MICROFARADS (μF), UNLESS OTHERWISE SPECIFIED. ☑ 0.1μF BYPASS CAPACITORS FOR ALL INTEGRATED CIRCUITS (ICs).

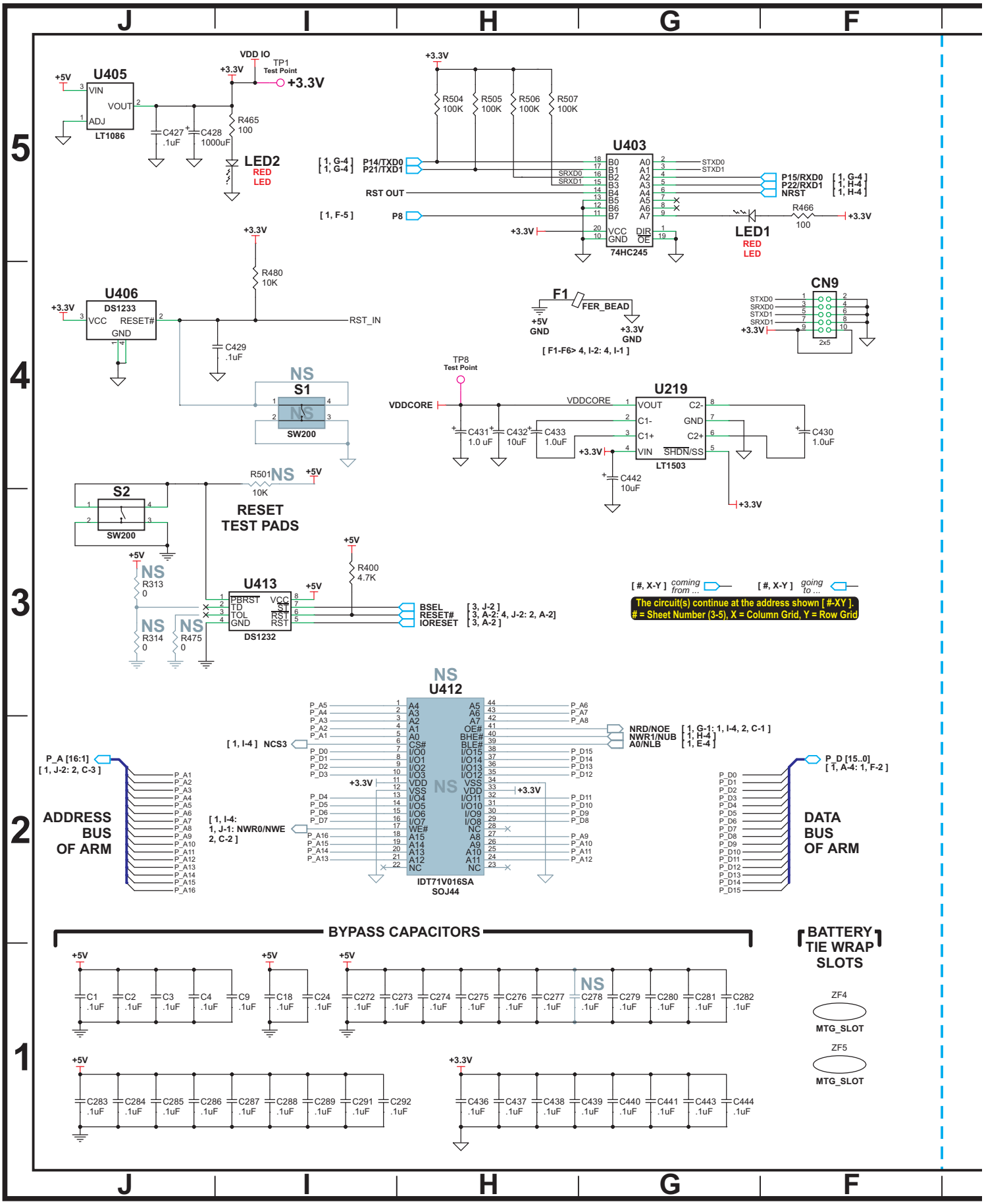
U405
LT1086
VIN
VOUT
ADJ
+5V
VDD IO
+3.3V
TP1
Test Point
C427 .1uF
C428 1000uF
R465 100
LED2
RED LED
R504 100K
R505 100K
R506 100K
R507 100K
U403
74HC245
P14/TXD0
P21/TXD1
RST OUT
P8
P15/RXD0
P22/RXD1
NRST
STXD0
STXD1
SRXD0
SRXD1
R466 100
LED1
RED LED
U406
DS1233
RESET#
GND
RST_IN
R480 10K
C429 .1uF
S1
SW200
NS
F1
FER_BEAD
+5V GND
+3.3V GND
[F1-F6> 4, I-2: 4, I-1]
CN9
2x5
TP8
Test Point
VDDCORE
U219
LT1503
VOUT
C1-
C1+
VIN
SHDN/SS
C2-
GND
C2+
C431 1.0 uF
C432 10uF
C433 1.0uF
C430 1.0uF
C442 10uF
S2
SW200
R501 10K
RESET TEST PADS
R313 0
R314 0
R475 0
U413
DS1232
PBRST
TD
TOL
GND
VCC
ST
RST
R400 4.7K
BSEL
RESET#
IORESET
[3, J-2]
[3, A-2: 4, J-2: 2, A-2]
[3, A-2]
[#, X-Y] coming from ...
[#, X-Y] going to ...
The circuit(s) continue at the address shown [#-XY].
= Sheet Number (3-5), X = Column Grid, Y = Row Grid
U412
IDT71V016SA
SOJ44
[1, I-4] NCS3
[1, I-4: 1, J-1: NWR0/NWE 2, C-2]
NRD/NOE
NWR1/NUB
A0/NLB
[1, G-1: 1, I-4, 2, C-1]
[1, H-4]
[1, E-4]
P_A [16:1]
[1, J-2: 2, C-3]
ADDRESS BUS OF ARM
P_D [15..0]
[1, A-4: 1, F-2]
DATA BUS OF ARM
BYPASS CAPACITORS
BATTERY TIE WRAP SLOTS
ZF4
MTG_SLOT
ZF5
MTG_SLOT

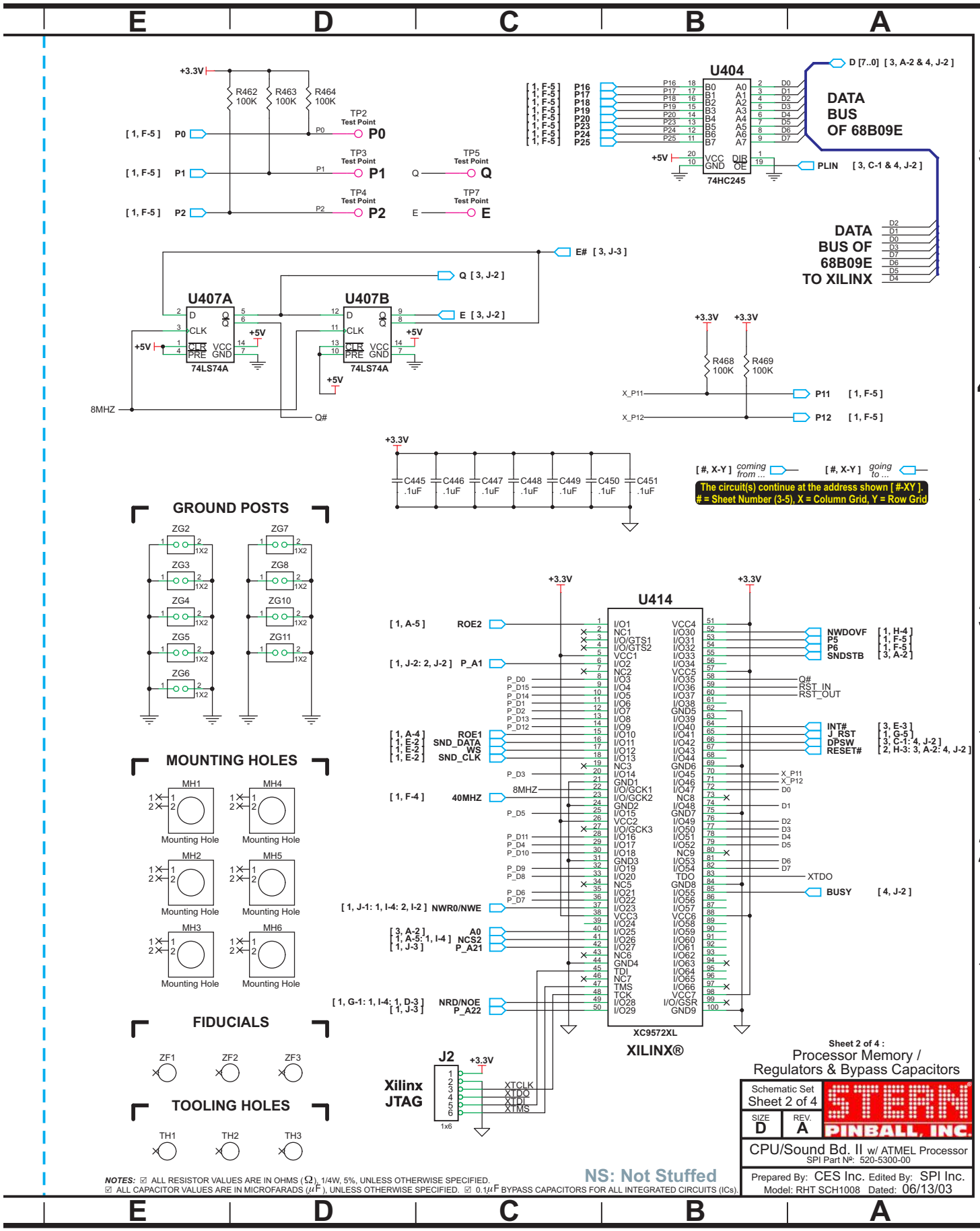
E D C B A
5 4 3 2 1
+3.3V
R462 100K
R463 100K
R464 100K
[1, F-5] P0
[1, F-5] P1
[1, F-5] P2
TP2 Test Point P0
TP3 Test Point P1
TP4 Test Point P2
TP5 Test Point Q
TP7 Test Point E
U404
74HC245
D [7..0] [3, A-2 & 4, J-2]
DATA BUS OF 68B09E
PLIN [3, C-1 & 4, J-2]
DATA BUS OF 68B09E TO XILINX
E# [3, J-3]
Q [3, J-2]
E [3, J-2]
U407A
U407B
74LS74A
8MHZ
Q#
R468 100K
R469 100K
X_P11
X_P12
P11 [1, F-5]
P12 [1, F-5]
C445 .1uF
C446 .1uF
C447 .1uF
C448 .1uF
C449 .1uF
C450 .1uF
C451 .1uF
[#, X-Y] coming from ...
[#, X-Y] going to ...
The circuit(s) continue at the address shown [#-XY].
= Sheet Number (3-5), X = Column Grid, Y = Row Grid
GROUND POSTS
ZG2
ZG3
ZG4
ZG5
ZG6
ZG7
ZG8
ZG10
ZG11
1X2
MOUNTING HOLES
MH1
MH2
MH3
MH4
MH5
MH6
Mounting Hole
FIDUCIALS
ZF1
ZF2
ZF3
TOOLING HOLES
TH1
TH2
TH3
U414
XC9572XL
XILINX®
[1, A-5] ROE2
[1, J-2: 2, J-2] P_A1
[1, A-4] ROE1
[1, E-2] SND_DATA
[1, E-2] WS
[1, E-2] SND_CLK
[1, F-4] 40MHZ
[1, J-1: 1, I-4: 2, I-2] NWR0/NWE
[3, A-2] A0
[1, A-5: 1, I-4] NCS2
[1, J-3] P_A21
[1, G-1: 1, I-4: 1, D-3] NRD/NOE
[1, J-3] P_A22
NWDOVF [1, H-4]
P5 [1, F-5]
P6 [1, F-5]
SNDSTB [3, A-2]
Q#
RST_IN
RST_OUT
INT# [3, E-3]
J_RST [1, G-5]
DPSW [3, C-1: 4, J-2]
RESET# [2, H-3: 3, A-2: 4, J-2]
XTDO
BUSY [4, J-2]
J2
Xilinx JTAG
XTCLK
XTDO
XTDI
XTMS
1x6
Sheet 2 of 4 :
Processor Memory / Regulators & Bypass Capacitors
Schematic Set Sheet 2 of 4
SIZE D
REV. A
STERN PINBALL, INC.
CPU/Sound Bd. II w/ ATMEL Processor
SPI Part №: 520-5300-00
Prepared By: CES Inc. Edited By: SPI Inc.
Model: RHT SCH1008 Dated: 06/13/03
NS: Not Stuffed
NOTES: ☑ ALL RESISTOR VALUES ARE IN OHMS (Ω), 1/4W, 5%, UNLESS OTHERWISE SPECIFIED.
☑ ALL CAPACITOR VALUES ARE IN MICROFARADS (μF), UNLESS OTHERWISE SPECIFIED. ☑ 0.1μF BYPASS CAPACITORS FOR ALL INTEGRATED CIRCUITS (ICs).

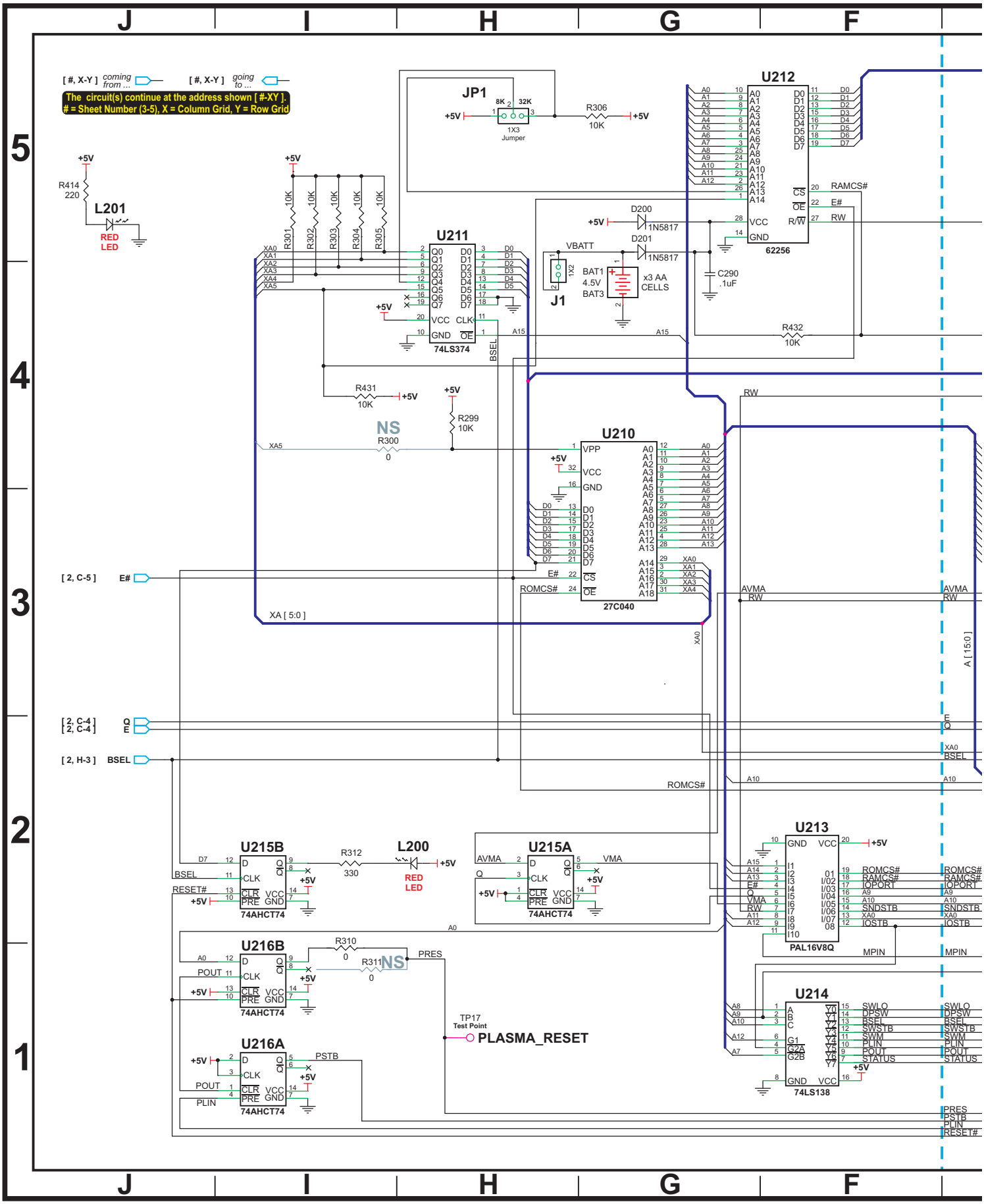
[#, X-Y] coming from ...
[#, X-Y] going to ...
The circuit(s) continue at the address shown [#-XY].
= Sheet Number (3-5), X = Column Grid, Y = Row Grid
JP1
1X3 Jumper
R306 10K
U212
62256
U211
74LS374
U210
27C040
L201
RED LED
R414 220
R301 10K
R302 10K
R303 10K
R304 10K
R305 10K
D200 1N5817
D201 1N5817
VBATT
J1
BAT1 4.5V BAT3
x3 AA CELLS
C290 .1uF
R432 10K
R431 10K
R299 10K
NS
R300 0
U215B
74AHCT74
R312 330
L200
RED LED
U215A
74AHCT74
U213
PAL16V8Q
U216B
74AHCT74
R310 0
R311 0
U216A
74AHCT74
TP17 Test Point
PLASMA_RESET
U214
74LS138
[2, C-5] E#
[2, C-4] Q
[2, C-4] E
[2, H-3] BSEL
XA [5:0]
A [15:0]
RAMCS#
ROMCS#
IOPORT
SNDSTB
IOSTB
MPIN
SWLQ
DPSW
BSEL
SWSTB
SWM
PLIN
POUT
STATUS
PRES
PSTB
RESET#
AVMA
RW
VMA
A10
A15
BSEL

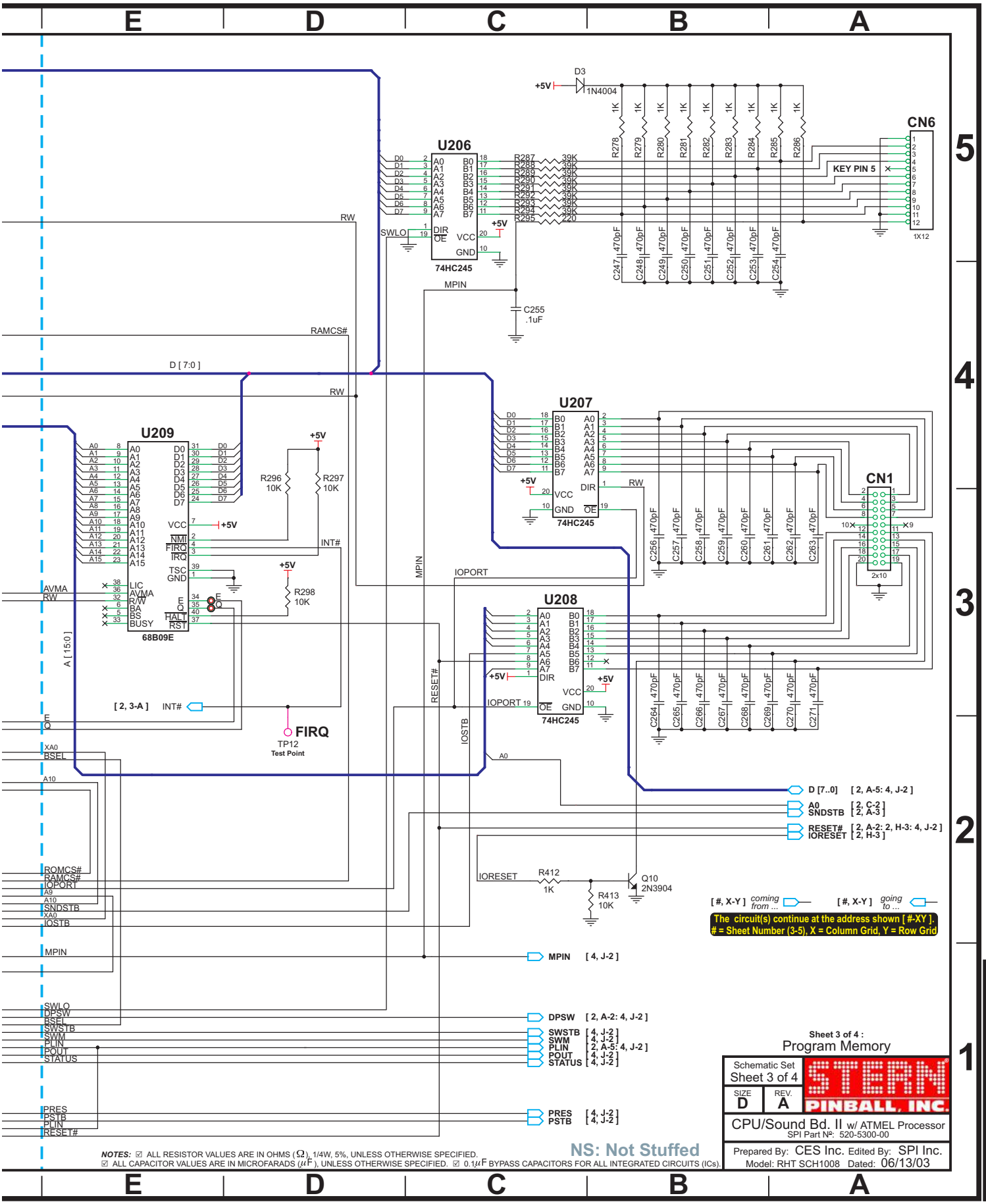
U206
74HC245
U207
74HC245
U208
74HC245
U209
68B09E
CN6
KEY PIN 5
1X12
CN1
2x10
D3
1N4004
+5V
RW
RAMCS#
D [7:0]
SWLO
MPIN
C255
.1uF
R296
10K
R297
10K
R298
10K
INT#
IOPORT
RESET#
IOSTB
A0
AVMA
A [15:0]
[2, 3-A]
FIRQ
TP12
Test Point
IORESET
R412
1K
R413
10K
Q10
2N3904
D [7..0] [2, A-5: 4, J-2]
A0 [2, C-2]
SNDSTB [2, A-3]
RESET# [2, A-2: 2, H-3: 4, J-2]
IORESET [2, H-3]
[#, X-Y] coming from ...
[#, X-Y] going to ...
The circuit(s) continue at the address shown [#-XY].
= Sheet Number (3-5), X = Column Grid, Y = Row Grid
MPIN [4, J-2]
DPSW [2, A-2: 4, J-2]
SWSTB [4, J-2]
SWM [4, J-2]
PLIN [2, A-5: 4, J-2]
POUT [4, J-2]
STATUS [4, J-2]
PRES [4, J-2]
PSTB [4, J-2]
Sheet 3 of 4 :
Program Memory
Schematic Set
Sheet 3 of 4
SIZE D
REV. A
STERN PINBALL, INC.
CPU/Sound Bd. II w/ ATMEL Processor
SPI Part №: 520-5300-00
Prepared By: CES Inc. Edited By: SPI Inc.
Model: RHT SCH1008 Dated: 06/13/03
NS: Not Stuffed
NOTES: ☑ ALL RESISTOR VALUES ARE IN OHMS (Ω), 1/4W, 5%, UNLESS OTHERWISE SPECIFIED.
☑ ALL CAPACITOR VALUES ARE IN MICROFARADS (μF), UNLESS OTHERWISE SPECIFIED. ☑ 0.1μF BYPASS CAPACITORS FOR ALL INTEGRATED CIRCUITS (ICs).

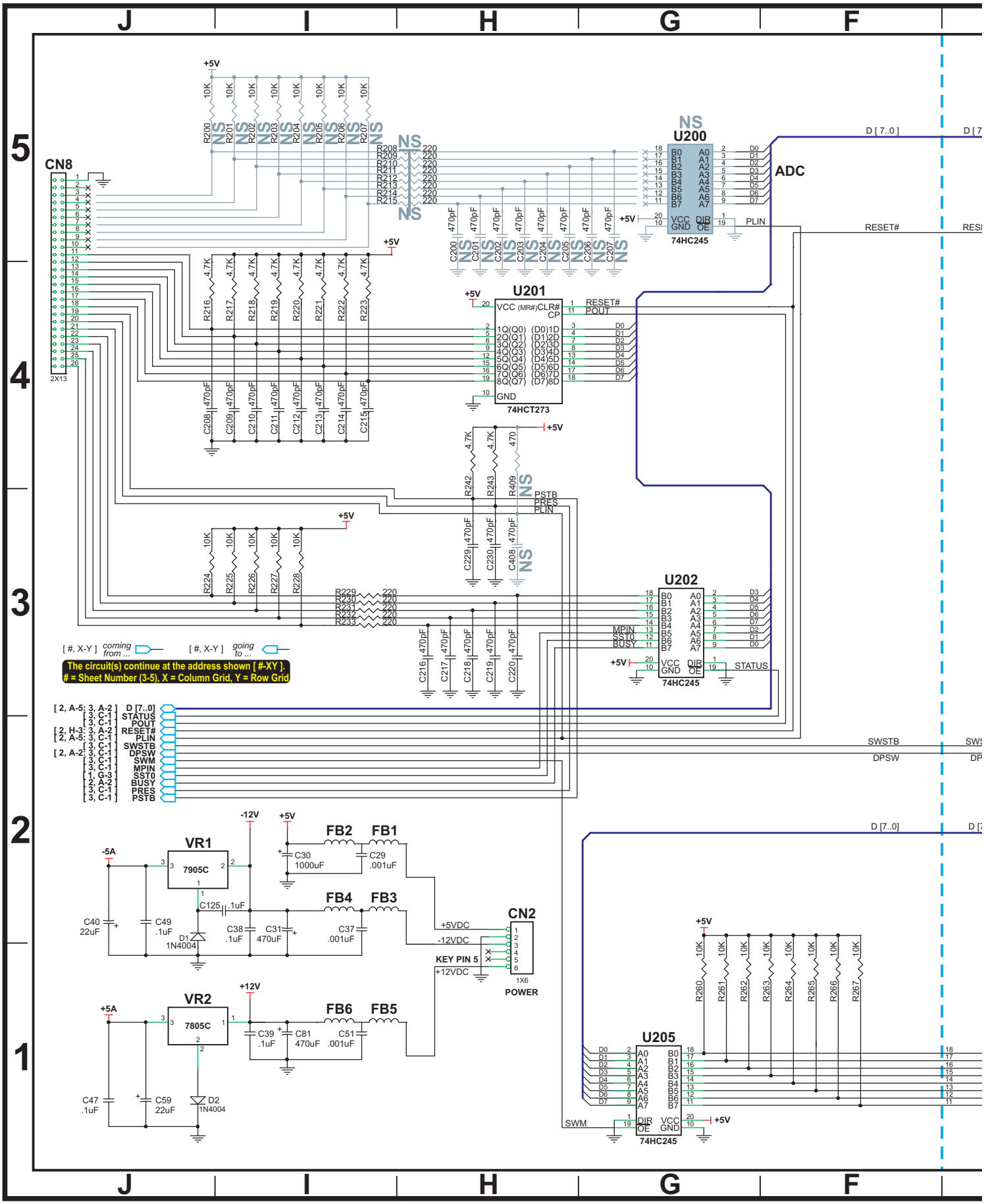
CN8
2X13
U200
74HC245
ADC
U201
74HCT273
U202
74HC245
U205
74HC245
VR1
7905C
VR2
7805C
CN2
1X6
POWER
KEY PIN 5
+5VDC
-12VDC
+12VDC
D [7..0]
RESET#
SWSTB
DPSW
STATUS
PLIN
PSTB
PRES
SWM
MPIN
SST0
BUSY
POUT
The circuit(s) continue at the address shown [#-XY].
= Sheet Number (3-5), X = Column Grid, Y = Row Grid

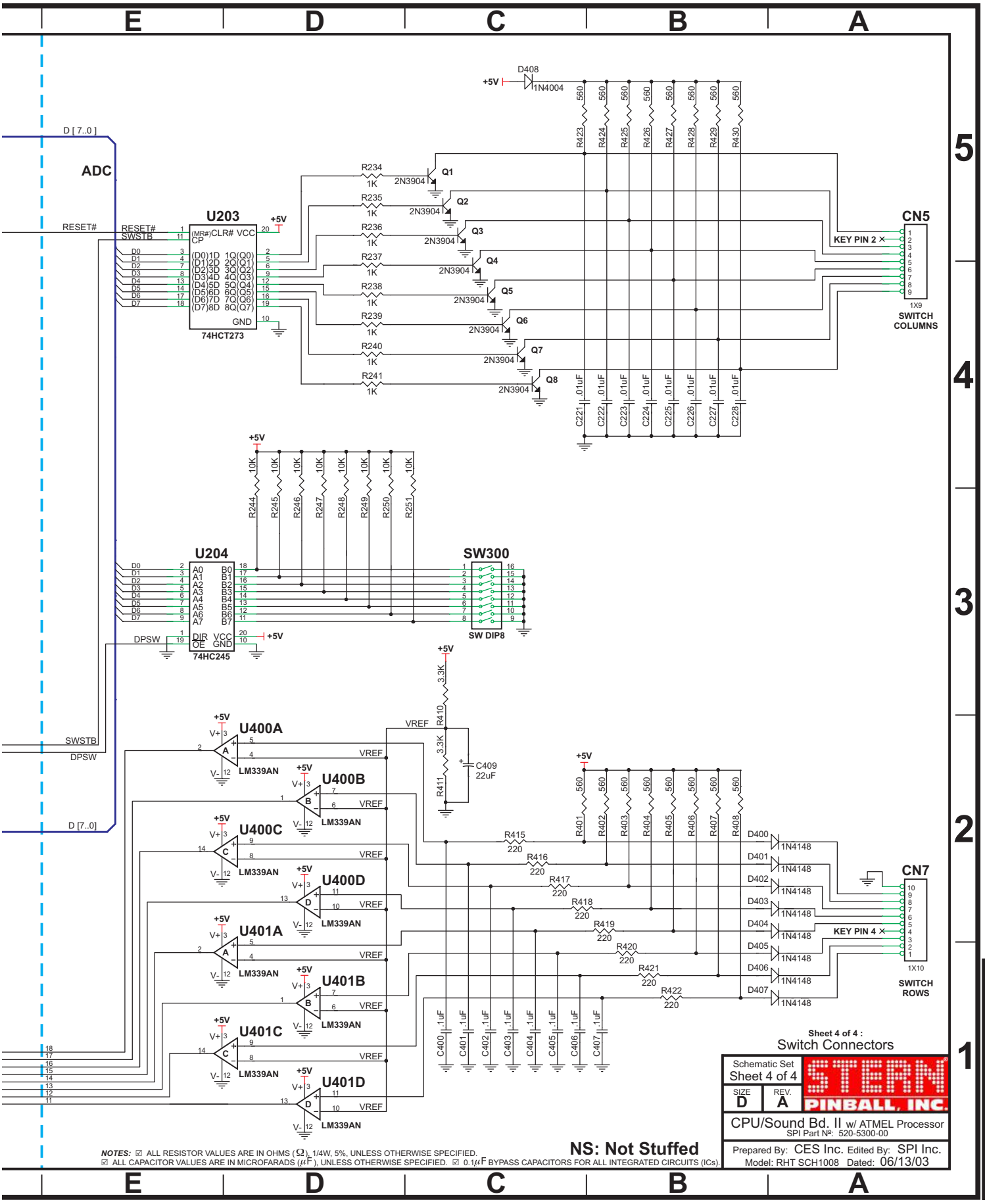
ADC
D [7..0]
RESET#
SWSTB
DPSW
U203
74HCT273
U204
74HC245
SW300
SW DIP8
CN5
SWITCH COLUMNS
KEY PIN 2
CN7
SWITCH ROWS
KEY PIN 4
U400A
U400B
U400C
U400D
U401A
U401B
U401C
U401D
LM339AN
VREF
+5V
D408
1N4004
Q1
Q2
Q3
Q4
Q5
Q6
Q7
Q8
2N3904
C409
22uF
NS: Not Stuffed
Sheet 4 of 4 :
Switch Connectors
Schematic Set
Sheet 4 of 4
SIZE
D
REV.
A
STERN PINBALL, INC.
CPU/Sound Bd. II w/ ATMEL Processor
SPI Part №: 520-5300-00
Prepared By: CES Inc. Edited By: SPI Inc.
Model: RHT SCH1008 Dated: 06/13/03
NOTES: ☑ ALL RESISTOR VALUES ARE IN OHMS (Ω), 1/4W, 5%, UNLESS OTHERWISE SPECIFIED.
☑ ALL CAPACITOR VALUES ARE IN MICROFARADS (μF), UNLESS OTHERWISE SPECIFIED. ☑ 0.1μF BYPASS CAPACITORS FOR ALL INTEGRATED CIRCUITS (ICs).

CPU/Sound Board II (with ATMEL Processor) Component Layout

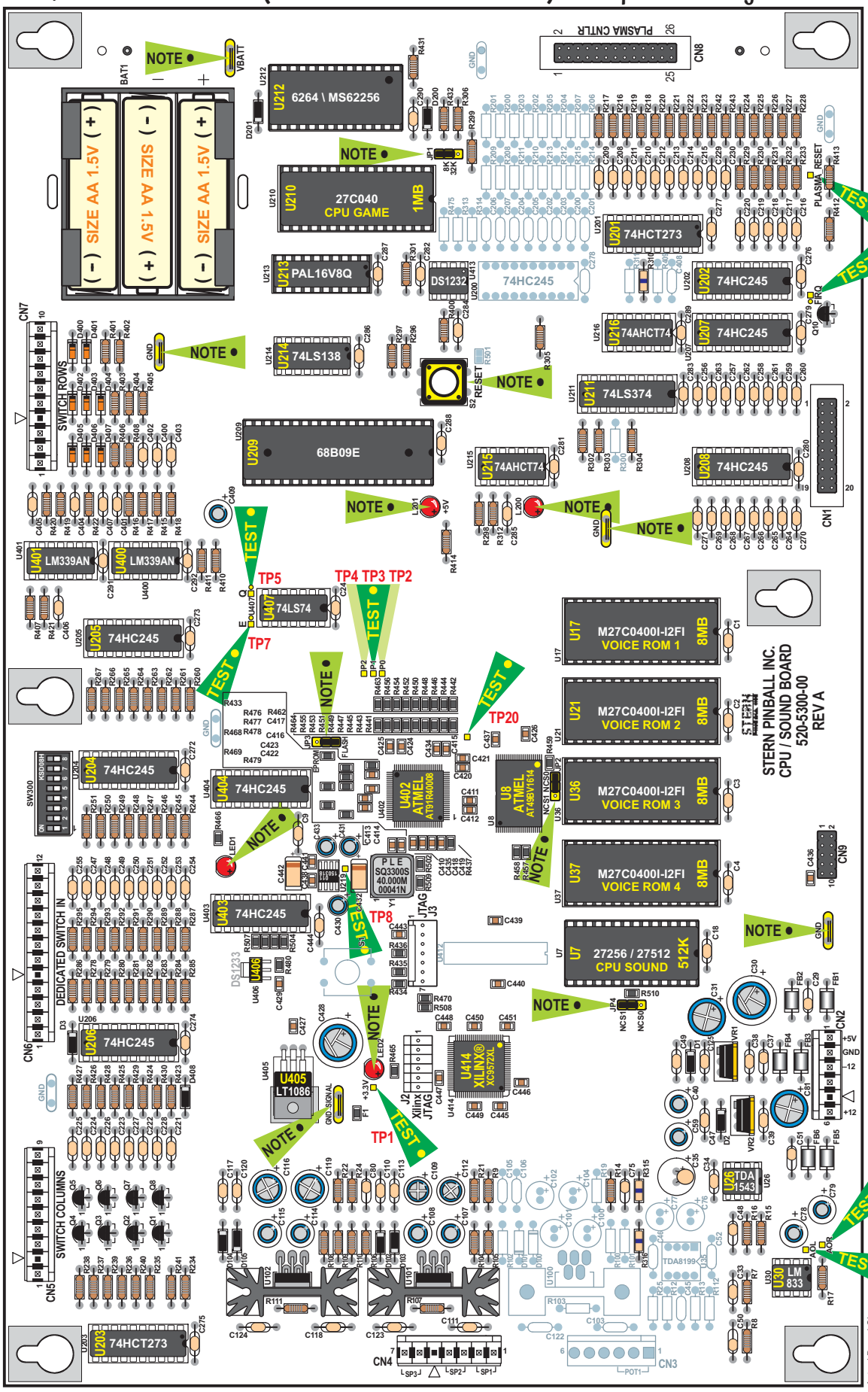

Test Points (TP):

TEST NOTE

- ←VBATT [3, G-4]
- 8K/32K
- ←JP1 [3, H-5]
- ←PLASMA_RESET
  TP17: [3, H-1]
- TP17
- TP12
- ←FIRQ TP12: [3, D-2]
- ←GND
- ←S2 RESET [2, J-3]
  SW200
- LEDs
- ←L201 / L200
  [3, J-5] & [3, H-2]
- ←GND
- ←Q TP5: [2, C-5]
- ←E TP7: [2, C-5]
- ←P2, P1, P0
  TP4, TP3, TP2: [2, D-5]
- ←U402 TP20: [1, J-2]
- JP3 [1, G-5]
- ←JP2 [1, G-1]
- ←U219 TP8: [2, H-4]
- ←LED1 [2, G-5]
- ←JTAG J3 [1, I-5]
- ←GND
- ←JP4 [1, E-3]
- ←JTAG J2 [2, C-1]
  XILINX
- ←LED2 [2, I-5]
- ←+3.3V TP1: [2, I-5]
- ←GND_SIGNAL
- TP11
- ←AOL & AOR
  TP16: [1, C-1],
  TP16 TP11: [1, D-4]

CPU/Sound II Board (with Atmel Processor) Parts

	ITEM	QTY	PART NUMBER	REF-DESIGNATOR	DESCRIPTION (NS = Not Stuffed)
	—	**1**	**520-5300-00**	**CPU/Sound II Board (with Atmel Processor)**	**Complete PCB Assembly**
Connectors	01	4		JP1, JP2, JP3, JP4	3-Pin Jumper & 2-Pin Cover
	02	1	045-5015-06	CN2 (Key Pin-5)	6-Pin, 6PKK156
	03	1		J2 JTAG Xilinx®	6-Pin, ## Header
	04	1	045-5015-07	CN4 (Key Pin-5)	7-Pin, 7PKK156
	05	1		J3 JTAG	7-Pin, ## Header
	06	1	045-5013-00	CN5 (Key Pin-2)	9-Pin, 9PKK156
	07	1		CN9	10-Pin, 0.1 Header
	08	1	045-5014-01	CN7 (Key Pin-4)	10-Pin, 10PKK156
	09	1	045-5015-00	CN6 (Key Pin-5)	12-Pin, 12PKK156
	10	1	045-5015-01	CN1	20-Pin, 0.1 Header
	11	1	045-5015-26	CN8	26-Pin, 0.1 Header
Capacitors*	12	3	125-5043-00	C29, C37, C51	0.001uF (102), Cap.
	13	4	125-5039-00	C48, C50, C75, C80	0.0022uF *or* 2200pF, (222), Cap.
	14	8	125-5029-00	C221>C228	0.01uF (103), 100v Cap.
	15	52	125-5031-00	C1>C4, C9, C18, C24, C33, C34, C38, C39, C47, C49, C110, C111, C113, C117, C118, C120, C123, C124, C125, C255, C272>C277, C279>C292, C400>C407, C444 (C45, C46, C52, C103, C105, C106, C122, C278: NS)	0.1uF (104), Axial Cer. Cap.
	16	3		C430, C431, C433 *(near U403, U404)*	1.0uF, ##v, Radial Lytic Cap.
	17	1	125-5017-00	C35	10uF, 16v, Radial Tant. Cap.
	18	4	125-5017-00	C78, C79, C107, C114 (C76, C77, C100: NS)	10uF, 25v-35v, Radial Lytic Cap.
	19	2	125-5015-00	C109, C112 (C102, C104: NS)	100uF, 25v, Radial Lytic Cap.
	20	1	125-5014-00	C409	22uF, 16v, Radial Lytic Cap.
	21	4	125-5020-00	C40, C59, C108, C115 (C101: NS)	22uF, 25v, Radial Lytic Cap.
	22	2	125-5012-00	C116, C119	220uF, 25v, Radial Lytic Cap.
	23	2	125-5019-00	C31, C81	470uF, 25v, Radial Lytic Cap.
	24	39	125-5028-00	C208>C215, C216>C220, C229, C230, C247>C254, C256>C263, C264>C271 (C200>C207, C408: NS)	470pF (471), Cer. Cap.
	25	2	125-5037-00	C30, C428	1000uF, 16v, Radial Lytic Cap.
	26	17		C427, C429, C436>C441, C443, C445>C451	SMT .1uF Cap.
	27	2		C432, C442 *(near U403 & U404)*	SMT 10uF Cap.
	28	9		C411, C414, C416, C419, C420, C422, C424, C434, C435	SMT 47pF Cap.
	29	10		C410, C412, C413, C415, C417, C418, C421, C423, C425, C426	SMT 100nF Cap.
Diodes & LEDs*	30	7	112-5003-00	D1>D3, D102>D105, D408 (D100, D101: NS)	1N4004, Diode
	31	2	112-5008-00	D200, D201	1N5817, Diode
	32	8	112-0054-00	D400-D407	1N4148, Diode
	33	4	165-5099-00	**LED1, LED2, L200, L201**	**LED T1-3/4 DIFFUSER LED**
Resistors / Transistors*	34	3	124-5064-00	R310, R315, R316 (R300, R311, R313, R314, R475: NS)	0Ω Jumper Res. (1-Stripe)
	35	2	121-5041-00	R107, R111 (R103: NS)	1 Ω 1/4W Res.
	35	20	121-5009-00	R8, R15, R234>R241, R278>R286, R412	1K Ω 1/4W Res.
	36	1	121-5018-00	R7	1.5K Ω 1/4W Res.
	37	2	121-5043-00	R16, R17 (R25, R112: NS)	2.2K Ω 1/4W Res.
	38	2	121-5048-00	R410, R411	3.3K Ω 1/4W Res.
	39	12	121-5021-00	R21, R216>R223, R242, R243, R400	4.7K Ω 1/4W Res.
	40	36	121-5011-00	R106, R224>R228, R244>R251,R260>R267, R296>R299, R301>R306, R413, R431, R432 (R200>R207, R501: NS)	10K Ω 1/4W Res.
	41	3	121-5023-00	R9, R14, R104 (R100, R102: NS)	22K W 1/4W Res.
	42	1	121-5022-04	R110	33K Ω 1/4W Res.
	43	9	121-5045-00	R108, R287>R294	39K Ω Res.
	44	2	121-5032-00	R22, R24	47K Ω 1/4W Res.
	45	15	121-5014-00	R229>R233, R295, R414>R422 (R208>R215: NS)	220 Ω 1/4W Res.
	46	1	121-5036-00	R312	330 Ω 1/4W Res.
	47	2	121-5046-01	R105, R109 (R101, R409: NS)	470 Ω 1/4W Res.
	48	16	121-5047-00	R401>R408, R423>R430	560 Ω 1/4W Res.
	49	1		F1	SMT xx Res.
	50	4		R434, R435, R436, R508	SMT 1K Ω Res.
	51	1		R480	SMT 10K Ω Res.
	52	2		R502, R509	SMT 33 Ω Res.
	53	3		R465, R466, R470	SMT 100 Ω Res.
	54	35		R433, R437, R441>R459, R462>R464, R468, R469, R476>R479, R504>R507, R510	SMT 100K Ω Res.
	55	9	110-0069-00	Q1-Q8, Q10	2N3904, Transistor
ICs / RAMs / ROMs / EPROMs	56	1	100-5051-00	U402	**ATMEL**, AT91R40008
	57	1	100-5050-00	U8	**ATMEL**, AT49BV1614
	58	1	100-5044-00	U414	**XILINX®**, XC9572XL (programmed)
	59	1	(See Pg. **DR.** ❶ Table)	U7	**512K EPROM** Sound (27512)
	60	1	(See Pg. **DR.** ❶ Table)	U210 *(32-Pin, IC Socket, 077-5217-00)*	**1MB EPROM** CPU Game (27C040)
	61	4	(See Pg. **DR.** ❶ Table)	U17, U21, U36, U37 *(32-Pin, IC Socket, 077-5217-00)*	**8MB EPROM** Voice 1-4 (M27C0400I-12FI)
	62	1	965-6504-00	U213 (**BLUE DOT**)	**PAL16V8Q (Programmed) BLUE DOT**
	63	1	105-5046-00	U212 *(28-Pin, IC Dip Socket, 077-5208-00)*	6264/MS62256 (MS6264A) (28-Pin)
	64	1	100-0189-01	U209 *(40-Pin, IC Socket, 077-5209-00)*	68B09E (40-Pin)
	65	2	100-5015-00	U215, U216	74AHCT74 (14-Pin)
	66	8	100-0338-00	U202, U204, U205, U206, U207, U208, U403, U404 (U200: NS)	74HC245 (20-Pin)
	67	2	100-5012-00	U201, U203	74HCT273 (20-Pin)
	68	1	100-0037-00	U407	74LS74 (14-Pin)
	69	1	100-0148-00	U214	74LS138 (16-Pin)
	70	1	100-0064-00	U211	74LS374 (20-Pin)
	71	1	100-5052-00	U406	SMT 3.3v Watchdog, DS1233 (3-Pin)
	72	1	100-5023-00	U413	5.0v Watchdog, DS1232 (8-Pin)
	73	1	100-5053-00	U219	1.8v Volt. Regulator LT1503 (8-Pin)
	74	1	100-5059-00	U405	3.3v Volt. Regulator LT1086 (3-Pin)
	75	1	124-5002-00	VR1	-5v Regulator, LM7905CT
	76	1	124-5001-00	VR2	+5v Regulator, LM7805CT
	77	2	100-0377-00	U400, U401	LM339AN (14-Pin)
	78	1	100-0375-00	U30	LM833 (8-Pin)
	79	1	100-5018-00	U26	TDA1543 (8-Pin)
Miscellaneous	80	2	100-5016-20	U101, U102 (U100: NS)	TDA2030A (5-Pin)
	81	1		Y1	40MHz Clock PLE SQ3300S
	82	1	181-5002-00	SW300	Dip Switch 8-Pos., (KSD08H Black)
	83		n/a	FB1>FB6	Ferrite Bead
	84		535-5000-10	HS2, HS3, (HS1: NS) *(over U101, U102)*	Heat Sink (AAVID 531102)
	85	1		S2 (Reset)	Push-Button Switch (B3F4000)
	86	1	545-5685-00	BAT1 HOLDER ***(Always replace all 3, Size AA 1.5v Cells, with new ones, when required)***	

Test Point Wire (24ga.) Loops:
VBATT, GND *(near CN7)*,
GND *(near CN9)*, GND *(near L200)*,
GND_SIGNAL *(near U405)*

Test Point Pads:
TP1>TP5, TP7, TP8, TP11,
TP12, TP16, TP17, TP20

* Surface Mounts (SMT) are not listed.

* Surface Mounts (SMT) are not listed.

If a part is required where a part number is not provided, call Tech. Support (see back of cover).

Playfield Switches OPTO Transceiver Boards Schematic, Component Layout & Parts

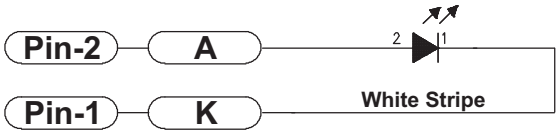

Mini PCB OPTO 12" Lead (Black Bracket) 500-6775-00

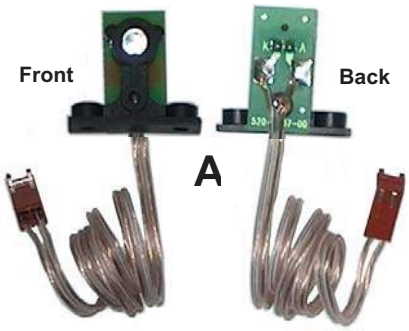

ITEM	QTY	PART NUMBER	REF-DESIGNATOR	DESCRIPTION
A	16	**500-6775-00**	**MINI PCB OPTO ASM WHT / 12" LEAD**	**PCB Assy.** (with all **Items 1-5**)
—	**1**	**520-5237-00**	**Mini OPTO Trans. or Rec. Board**	**PCB Only Plain**
01	1	545-6092-00		Black Bracket (Plastic) Holder
02	1	237-5909-00		#4-40 X 1/4 PPH Screw
03	**1**	**165-5052-00**		**LED** (**Ultra Bright Red**)
04	1	601-5023-12	K, A	12" Speaker Wire (1-Side White Stripe)
05	1	045-5020-02	*Note White Strip to Pin-1*	2-Pin Cn., .100 **KK Cmp Trm** Molex 08-50-0113

Playfield OPTO Transmitter / Receiver Amplifier Board Schematic

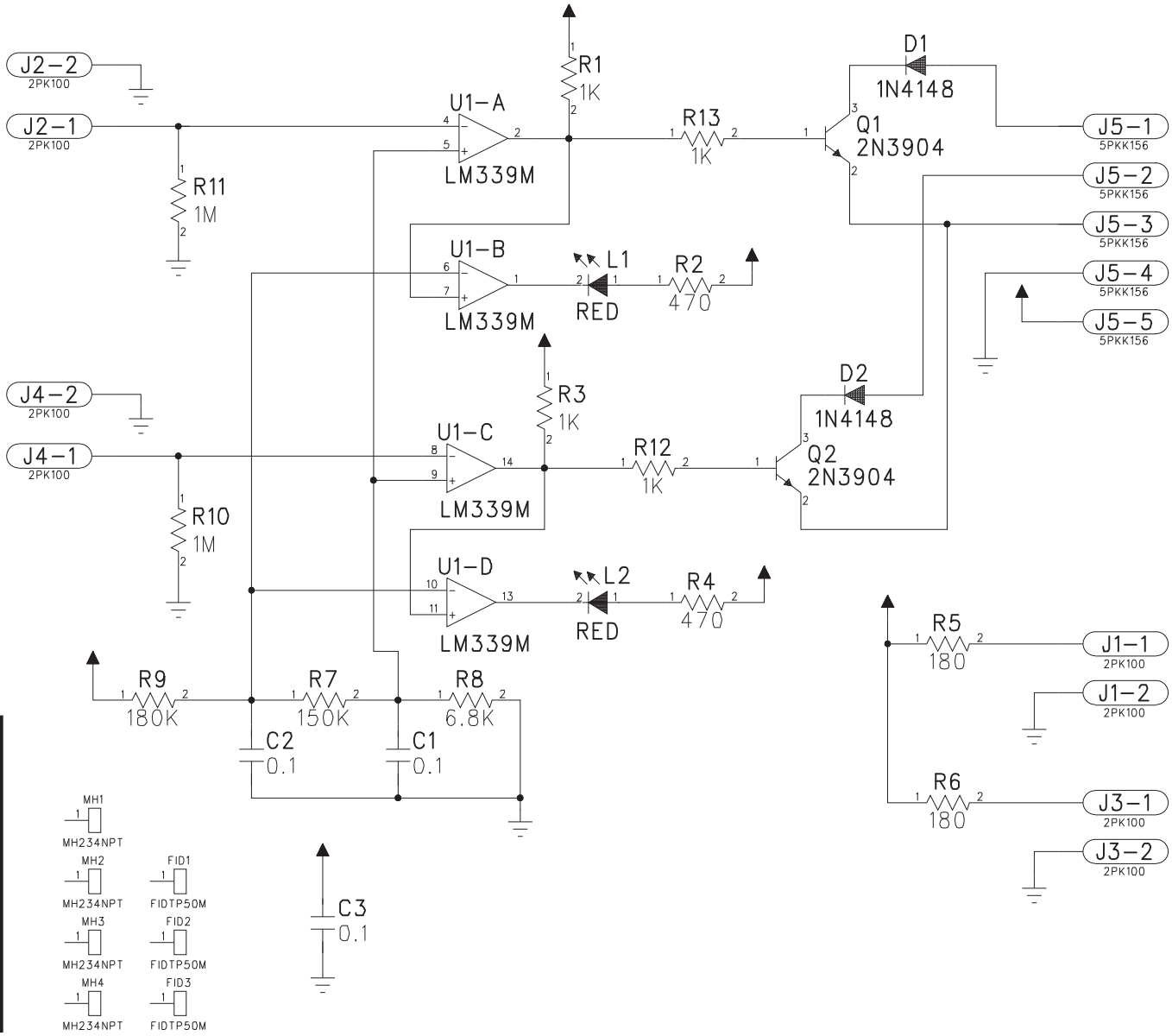

Playfield OPTO Transmitter/Receiver Amplifier Board Component Layout & Parts
(for OPTO Switches 20, 21, 32, 34, 35, 37, 47 & 48: see Wiring Configurations #1-#5)

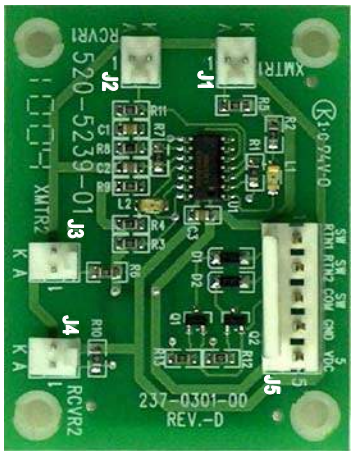

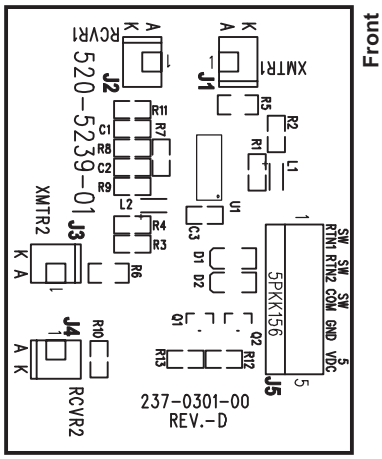

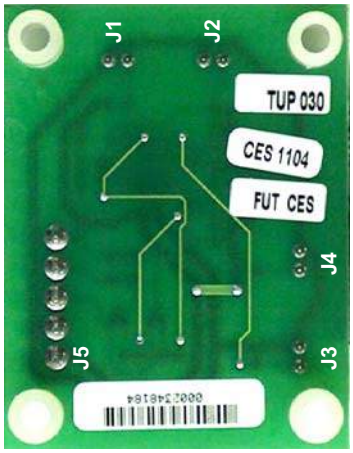

ITEM	QTY	PART NUMBER	REF-DESIGNATOR	DESCRIPTION
—	**5**	**520-5239-01**	**OPTO Transmitter/Receiver Amplifier Board**	**Complete PCB Assembly**
01	1		R7	SMT 150K Ω 1/10W Resistor 805, 5%
02	2		R5, R6	SMT 180 Ω 1/10W Resistor 805, 5%
03	1	*If a part is required where a part number is not provided, call Technical Support (see back of cover).*	R9	SMT 180K Ω 1/10W Resistor 805, 5%
04	4		R1, R3, R12, R13	SMT 1K Ω 1/10W Resistor 805, 5%
05	2		R10, R11	SMT 1M Ω 1/10W Resistor 805, 5%
06	2		R2, R4	SMT 470 Ω 1/10W Resistor 805, 5%
07	1		R8	SMT 6.8K Ω 1/10W Resistor 805, 5%
08	3		C1, C2, C3	SMT Cer. .1uF 50v Cap., 10% X7R
09	2		D1, D2	1N4148W, Diode, 100v, 350MW
10	2		Q1, Q2	MMST3904, NPN, 40v, .02A
11	1		U1	LM339M, Low Power Offset QUA
12	4	Mfg. 22-23-2021	J1, J2, J3, J4	2-Pin, 0.1 Header (1 Row, VT, Tin)
13	1	Mfg. 640445-5	J5	5-Pin, .156 Header (1 Row, VT, Tin)
14	2	Mfg. **APT3216SURC**	L1, L2	LEDD-SMT, Red 1206
15	4		n/a	**Spacer (Nylon), .153" ID X 9/32" OD X 3/8"**

Playfield OPTO Transmitter/Receiver Amplifier Board Wiring Configuration #1
(for OPTO Switches 35 & 37)

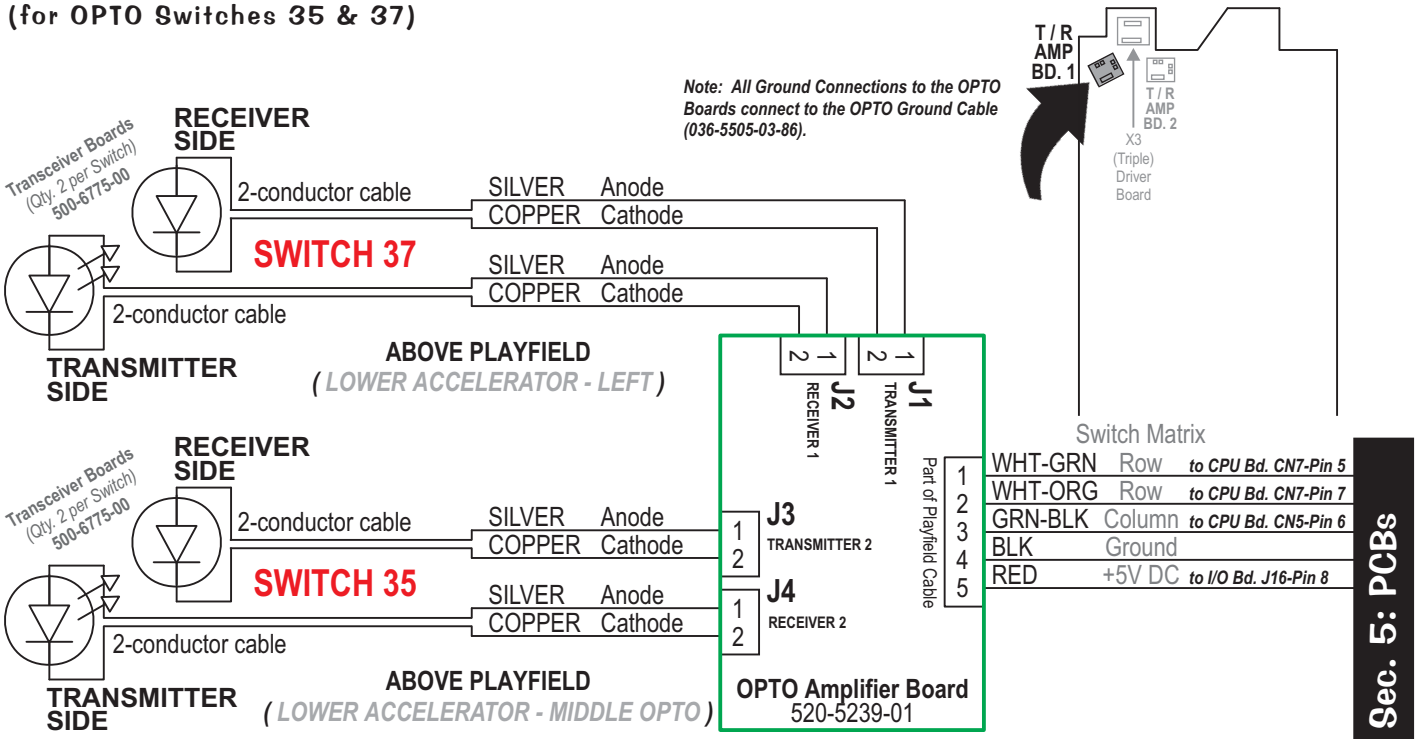

Wiring Configurations #2-#3 on Page 150; Wiring Configurations #4-#5 on Page 151

... for Playfield OPTO Transmitter/Receiver Amplifier Board Schematic, Comp. Layout & Parts, see prev. Pages 148-149.

Playfield OPTO Transmitter/Receiver Amplifier Board Wiring Configuration #2 (for OPTO Switch 34)

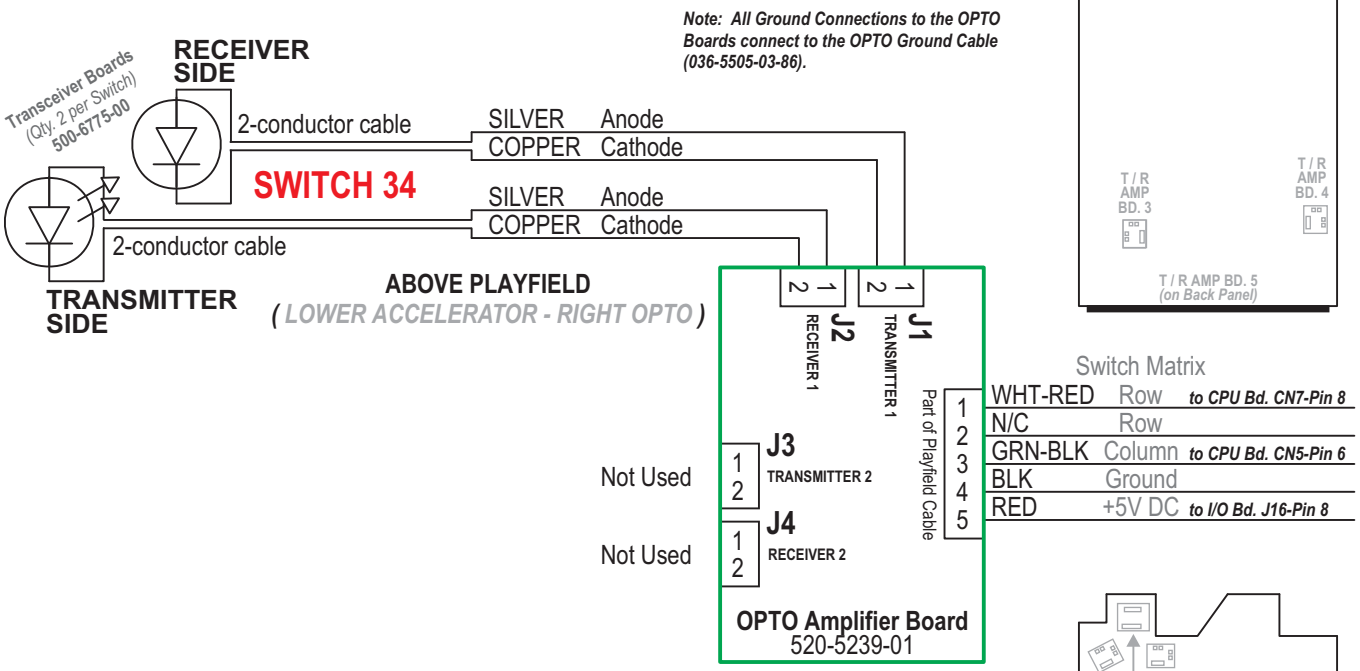

Playfield OPTO Transmitter/Receiver Amplifier Board Wiring Configuration #3 (for OPTO Switch 32)

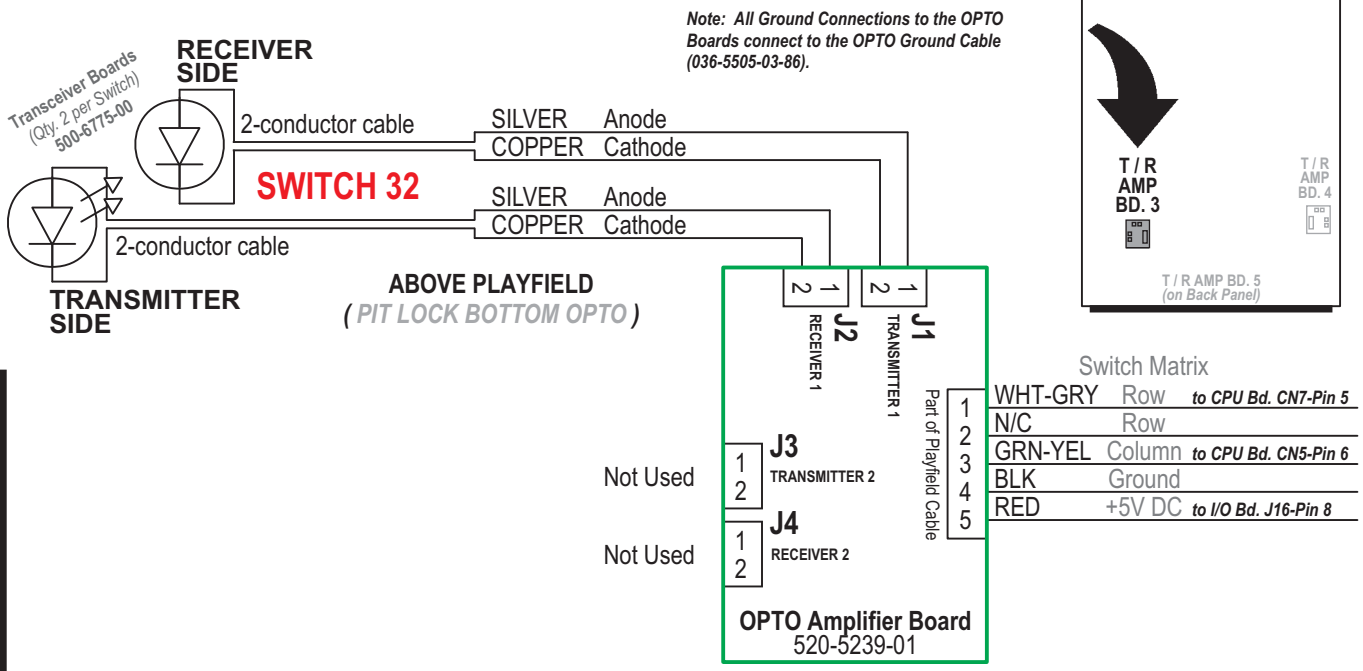

Wiring Configuration #1 on Page 149; Wiring Configurations #4-#5 on Page 151

... for Playfield OPTO Transmitter/Receiver Amplifier Board Schematic, Comp. Layout & Parts, see prev. Pages 148-149.

Playfield OPTO Transmitter/Receiver Amplifier Board Wiring Configuration #4 (for OPTO Switches 47 & 48)

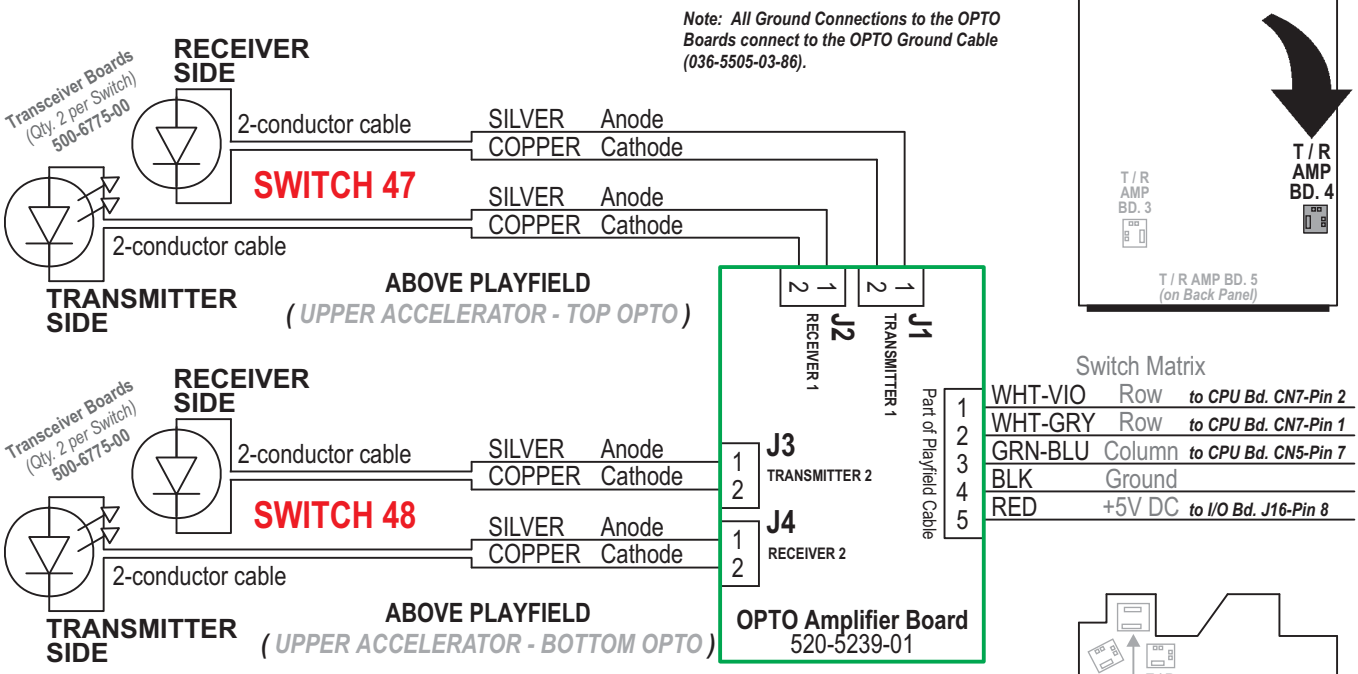

Playfield OPTO Transmitter/Receiver Amplifier Board Wiring Configuration #5 (for OPTO Switches 20 & 21)

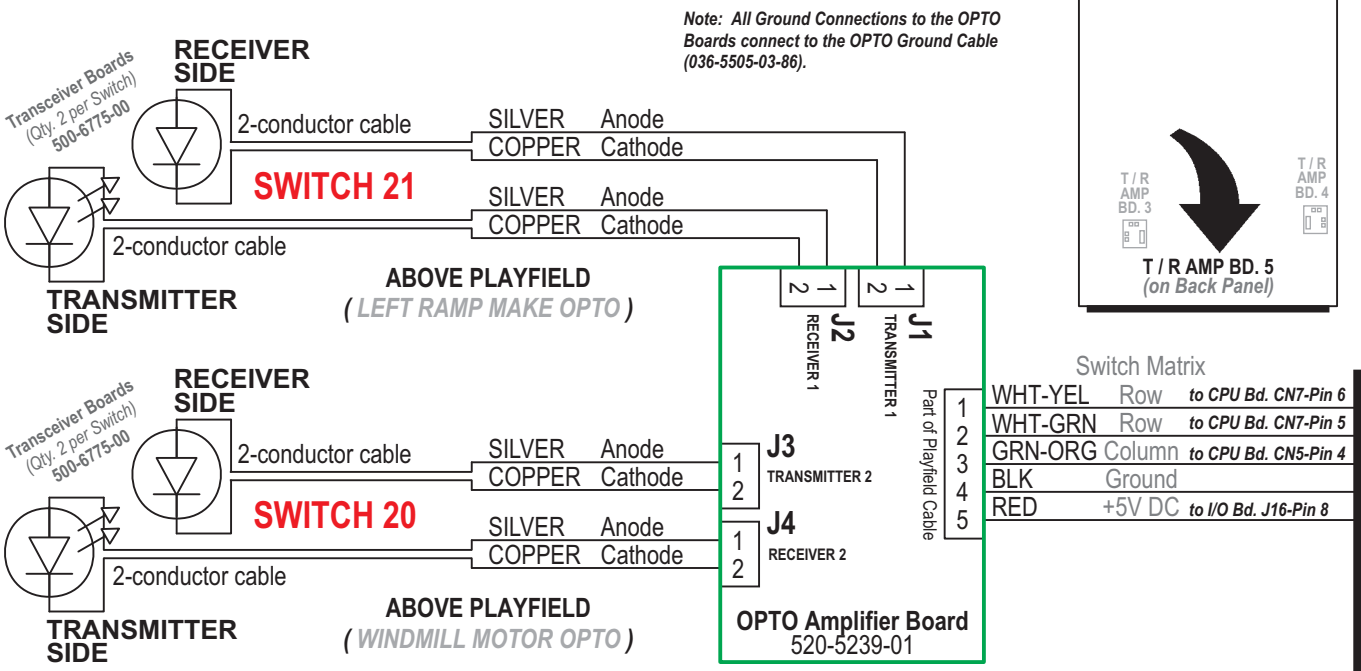

Wiring Configuration #1 on Page 149; Wiring Configurations #2-#3 on Page 150

Playfield X3 (Triple) Driver Board Schematic

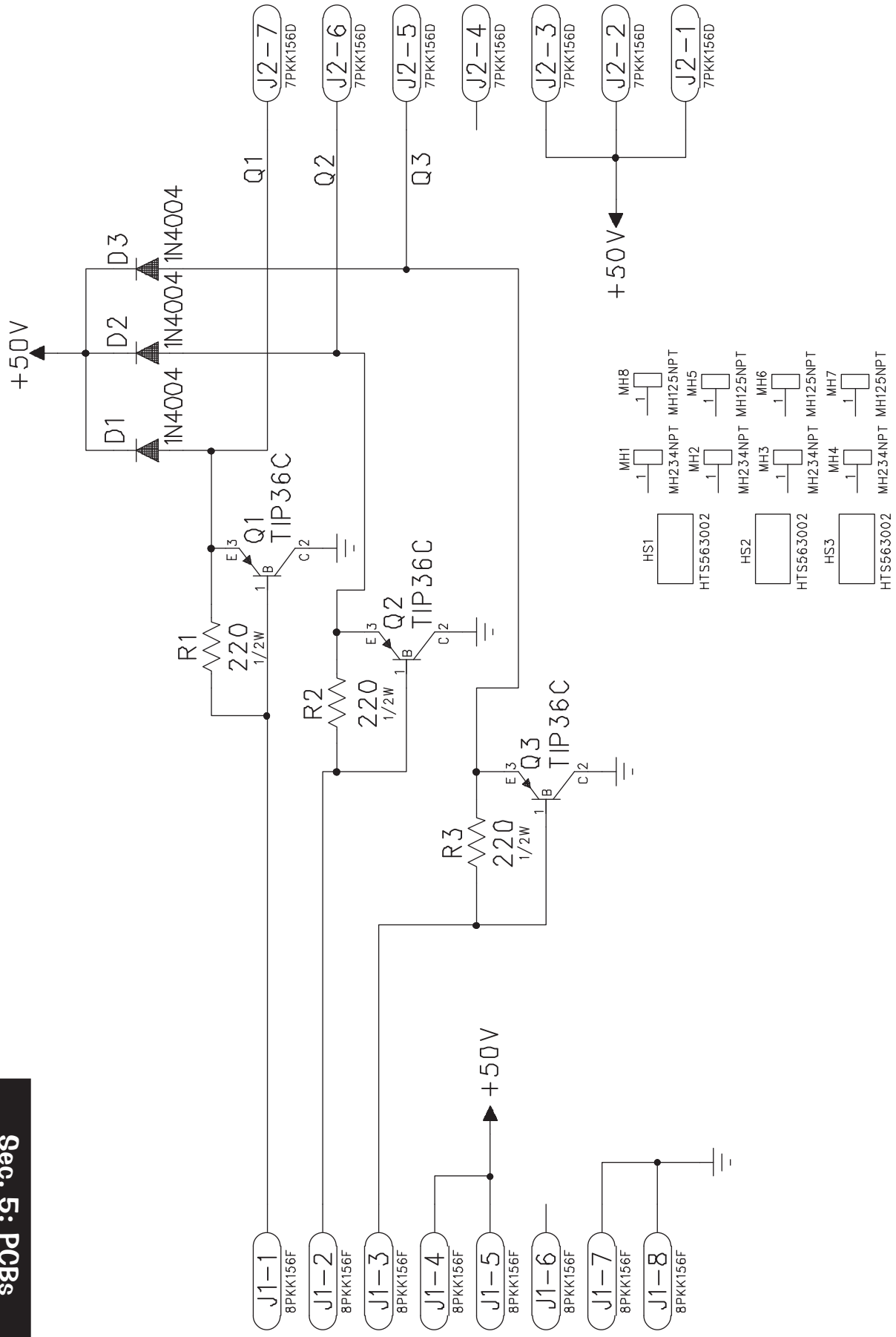

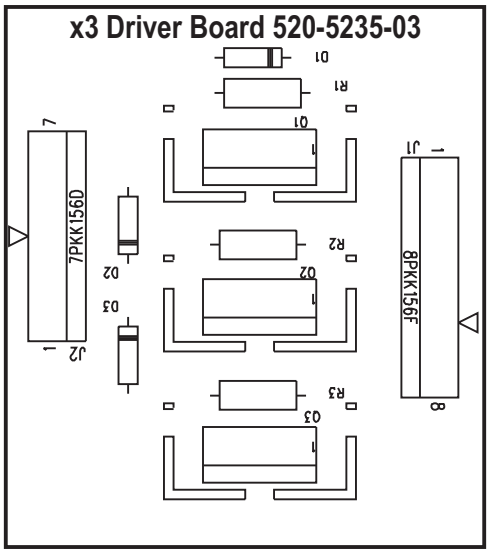

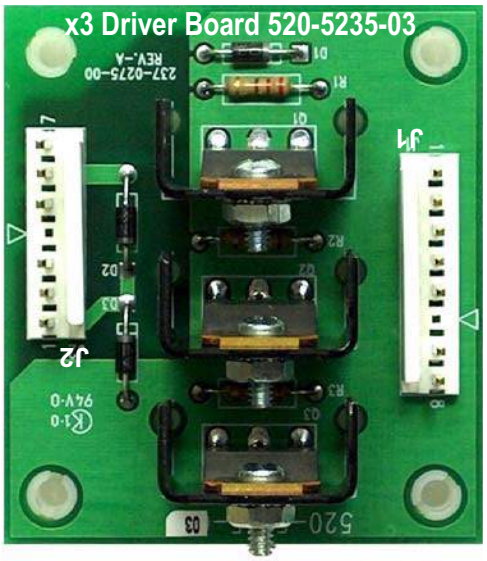

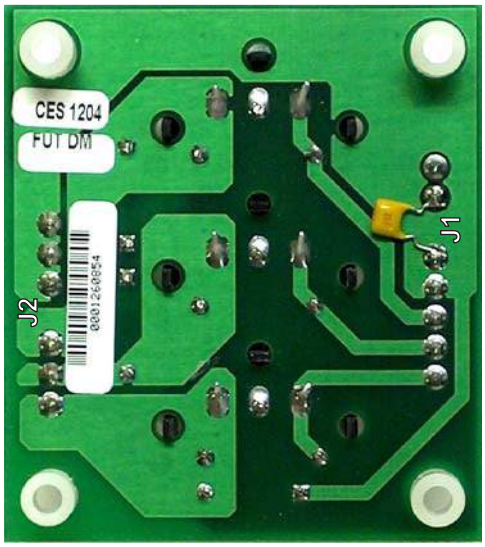

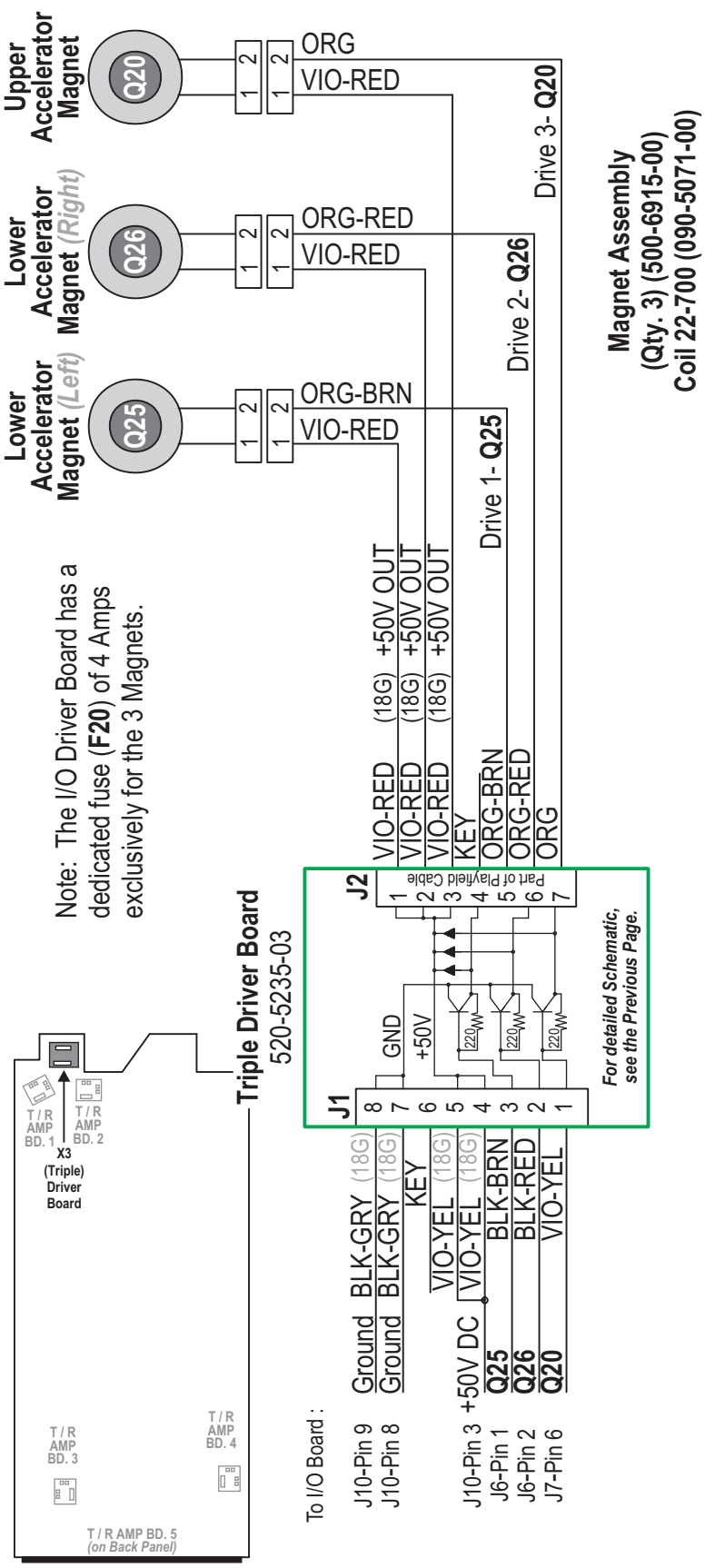

ITEM	QTY	PART NUMBER	REF-DESIGNATOR	DESCRIPTION
—	1	520-5235-03	Playfield X3 (Triple) Driver PC Board	Complete PCB Assembly

UK & Special App. 3X Transistor Driver Bd. Schematic

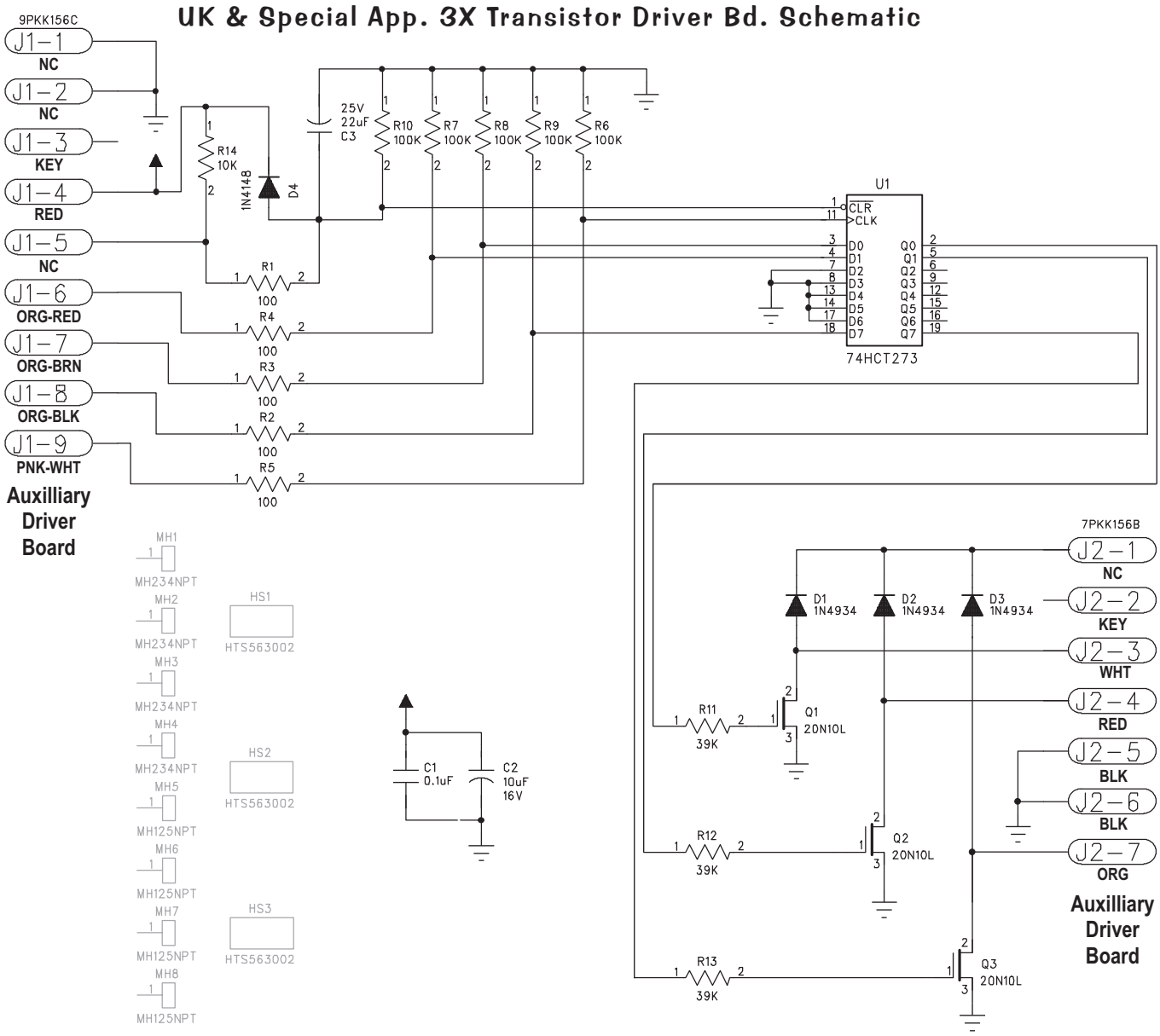

UK & Special App. 3X Transistor Driver Bd. Component Layout (Sol. Exp. Bd.)

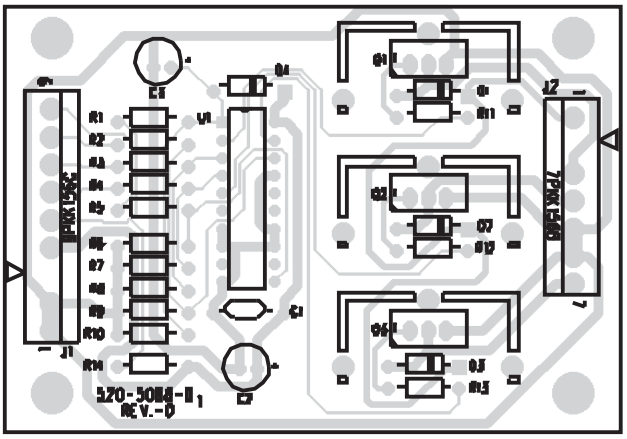

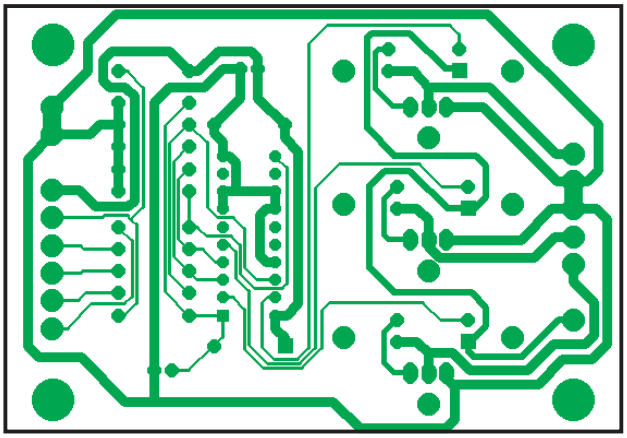

ITEM	QTY	PART NUMBER	REF-DESIGNATOR	DESCRIPTION
—	1	520-5068-01	Solenoid Expander (x3 Transistor) PC Board	Complete PCB Assembly

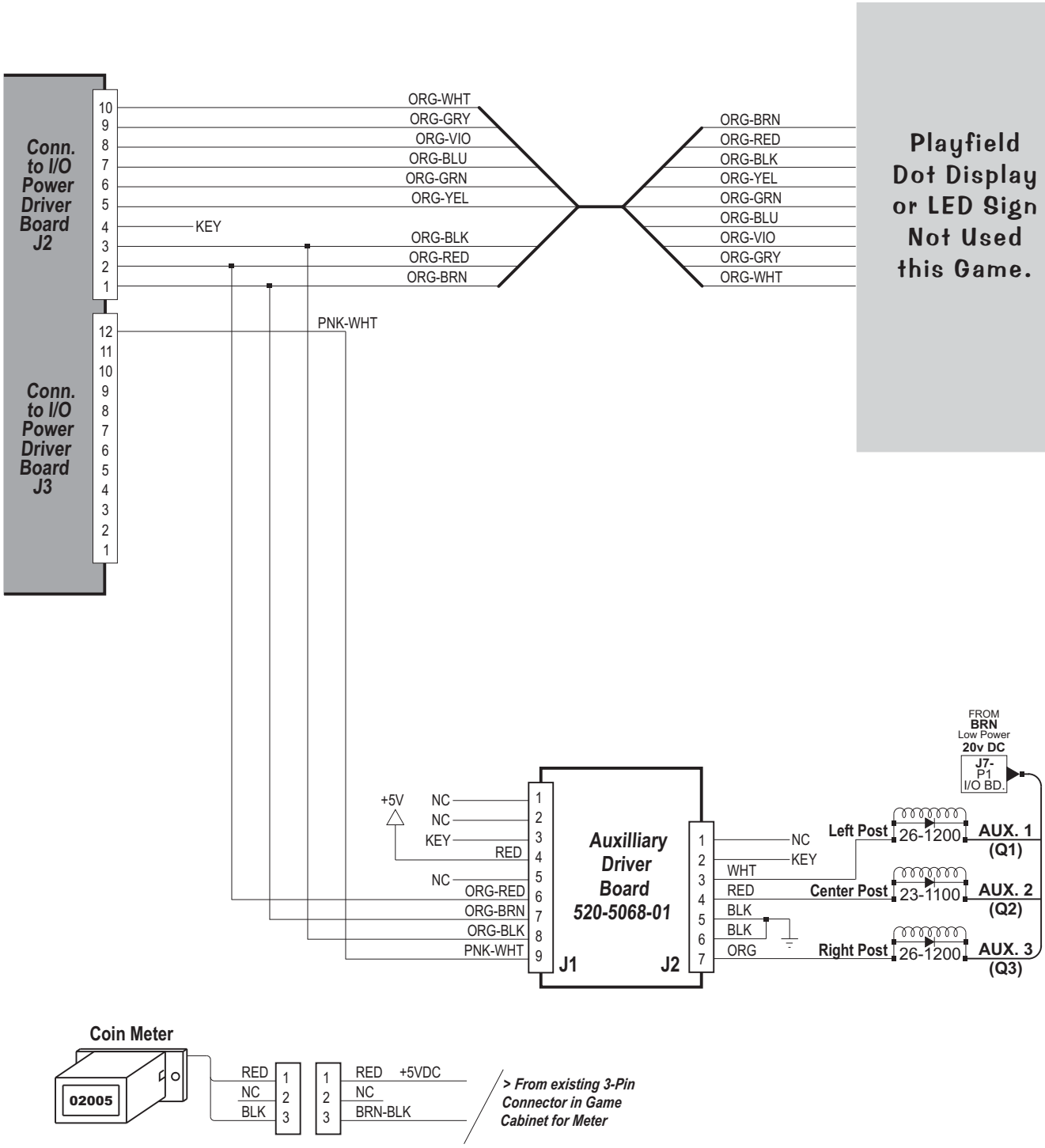
Conn. to I/O Power Driver Board J2
Conn. to I/O Power Driver Board J3
10 9 8 7 6 5 4 3 2 1
12 11 10 9 8 7 6 5 4 3 2 1
ORG-WHT
ORG-GRY
ORG-VIO
ORG-BLU
ORG-GRN
ORG-YEL
KEY
ORG-BLK
ORG-RED
ORG-BRN
PNK-WHT
ORG-BRN
ORG-RED
ORG-BLK
ORG-YEL
ORG-GRN
ORG-BLU
ORG-VIO
ORG-GRY
ORG-WHT
Playfield Dot Display or LED Sign Not Used this Game.
FROM BRN Low Power 20v DC
J7-P1 I/O BD.
+5V
NC
NC
KEY
RED
NC
ORG-RED
ORG-BRN
ORG-BLK
PNK-WHT
Auxilliary Driver Board 520-5068-01
J1
J2
NC
KEY
WHT
RED
BLK
BLK
ORG
Left Post
Center Post
Right Post
26-1200
23-1100
26-1200
AUX. 1 (Q1)
AUX. 2 (Q2)
AUX. 3 (Q3)
Coin Meter
02005
RED
NC
BLK
RED +5VDC
NC
BRN-BLK
> From existing 3-Pin Connector in Game Cabinet for Meter

UK 3X Transistor Driver Board for Up-Posts & P/F Dot Display or LED Sign (if used) with the Tournament Serial Interface (TSI) Board

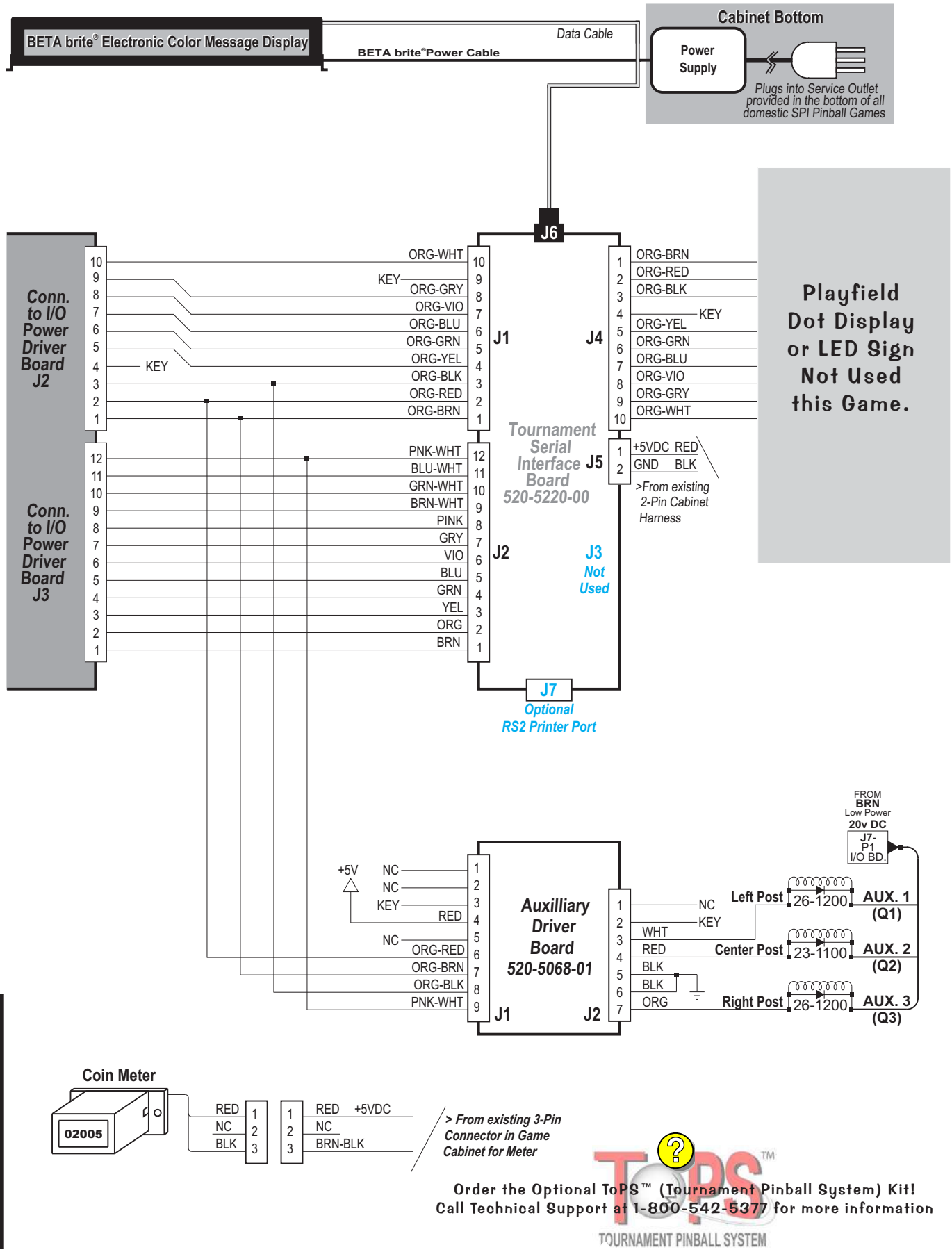

Order the Optional ToPS™ (Tournament Pinball System) Kit!
Call Technical Support at 1-800-542-5377 for more information

TOPS™ TOURNAMENT PINBALL SYSTEM

Aux. 3X Transistor Driver Board for ToPS™ with the Tournament Serial Interface (TSI) Board and Ticket Interface

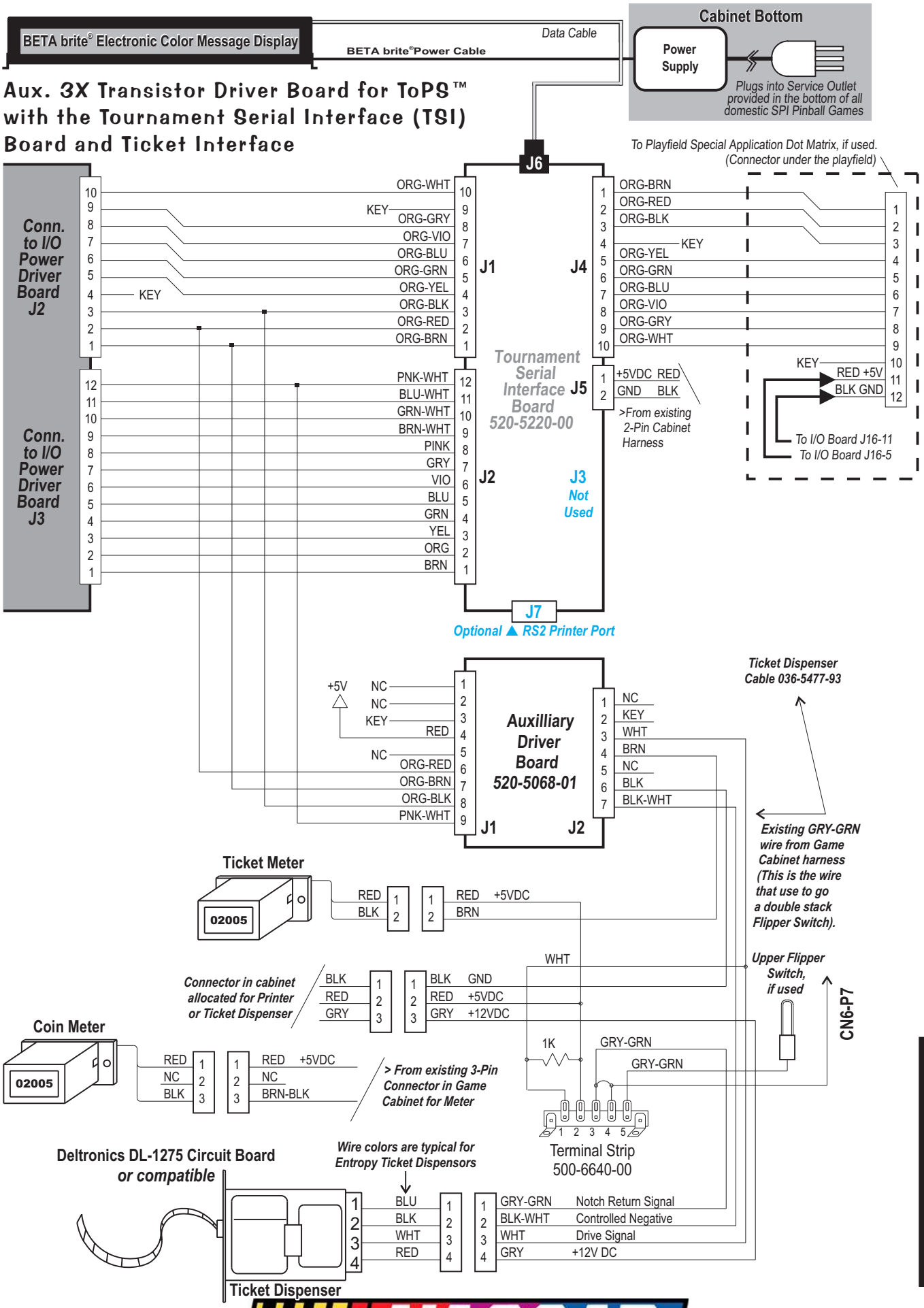

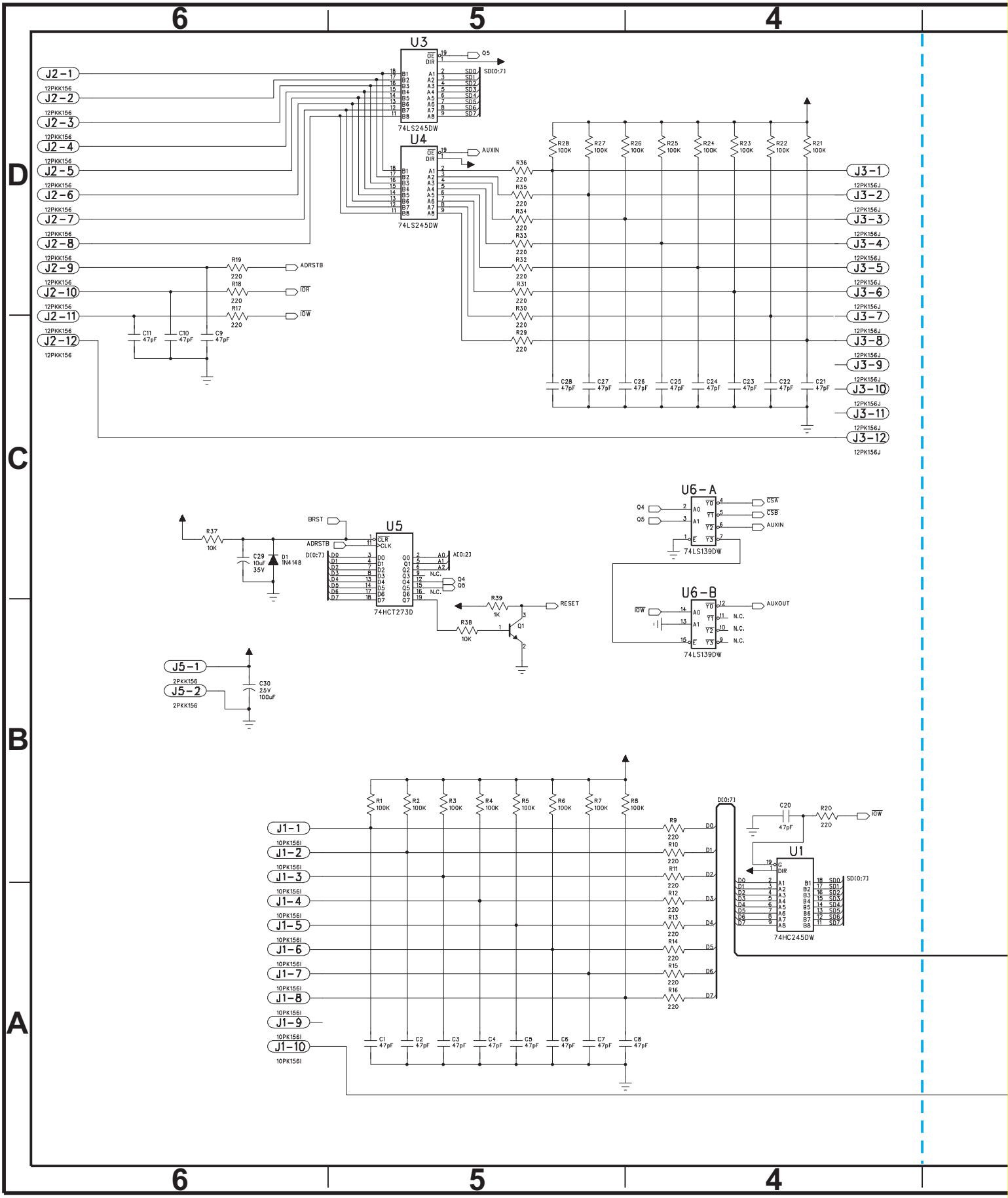
U3
74LS245DW
U4
74LS245DW
U5
74HCT273D
U6-A
74LS139DW
U6-B
74LS139DW
U1
74HC245DW
J2-1
J2-2
J2-3
J2-4
J2-5
J2-6
J2-7
J2-8
J2-9
J2-10
J2-11
J2-12
J3-1
J3-2
J3-3
J3-4
J3-5
J3-6
J3-7
J3-8
J3-9
J3-10
J3-11
J3-12
J5-1
J5-2
J1-1
J1-2
J1-3
J1-4
J1-5
J1-6
J1-7
J1-8
J1-9
J1-10
ADRSTB
IOR
IOW
AUXIN
AUXOUT
RESET
BRST
CSA
CSB
SD[0:7]
D[0:7]
A[0:2]
Q4
Q5
Q1
D1
1N4148
C29
10uF
35V
C30
25V
100uF
R37
10K
R38
10K
R39
1K
R19
R18
R17
R36
R35
R34
R33
R32
R31
R30
R29
R28
R27
R26
R25
R24
R23
R22
R21
R1
R2
R3
R4
R5
R6
R7
R8
R9
R10
R11
R12
R13
R14
R15
R16
R20
220
100K
C11
C10
C9
C28
C27
C26
C25
C24
C23
C22
C21
C1
C2
C3
C4
C5
C6
C7
C8
C20
47pF
12PKK156
12PK156J
2PKK156
10PK156I

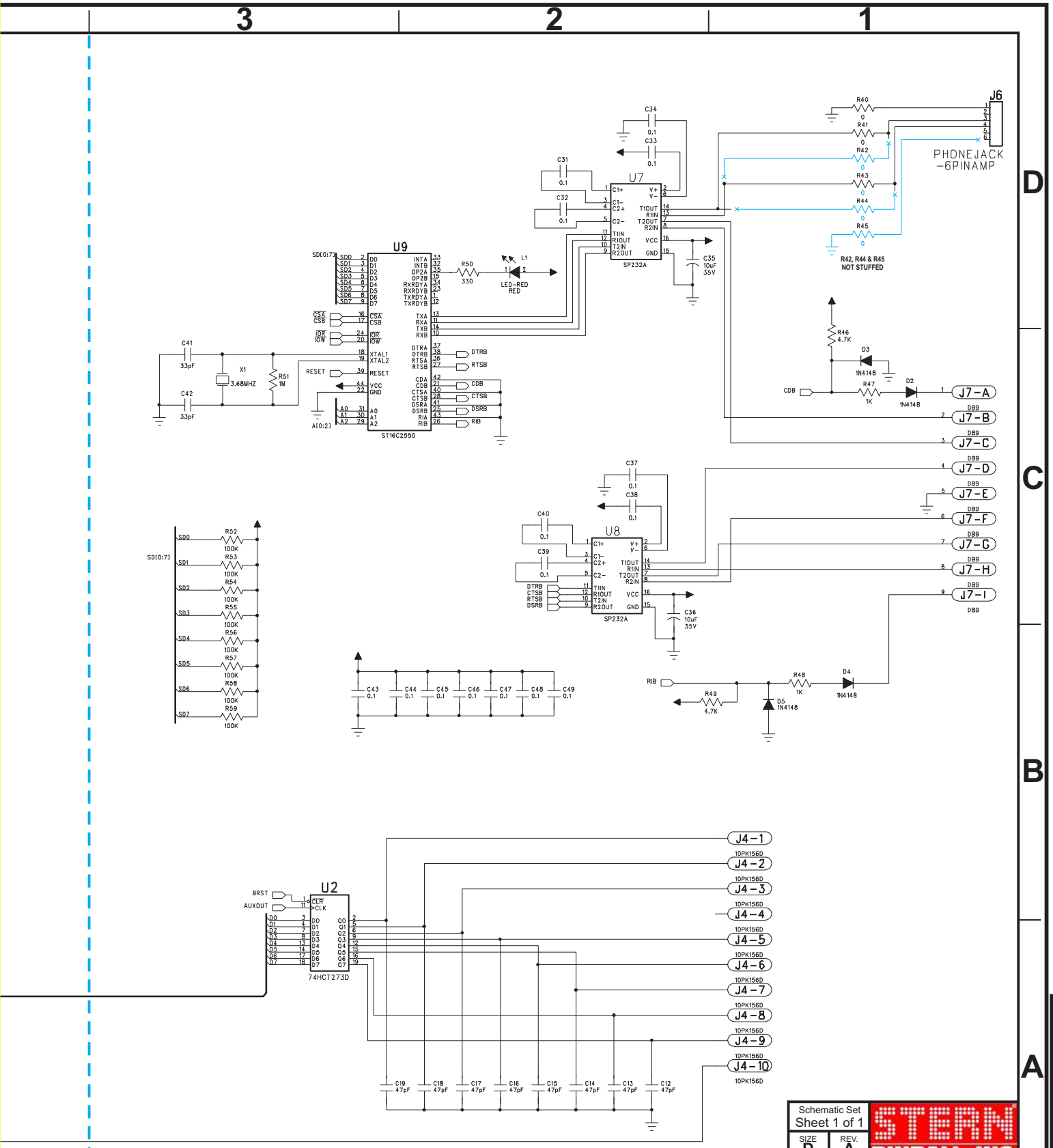

NOTES:

- ☑ ALL RESISTOR VALUES ARE IN OHMS (Ω), 1/4W, 5%, UNLESS OTHERWISE SPECIFIED.
- ☑ ALL CAPACITOR VALUES ARE IN MICROFARADS (μF), UNLESS OTHERWISE SPECIFIED.
- ☑ 0.1 MICROFARADS (μF) BYPASS CAPACITOR ON ALL IC'S.

Non-Text Document

Schematic Set Sheet 1 of 1	STERN PINBALL, INC.
SIZE D	REV. A
SPI Tournament Serial Interface Bd.	
SPI Part №: 520-5220-00	
Prepared By: CES Inc. Edited By: SPI Inc.	
Model: 237-0268-00 Dated: 08/2002	

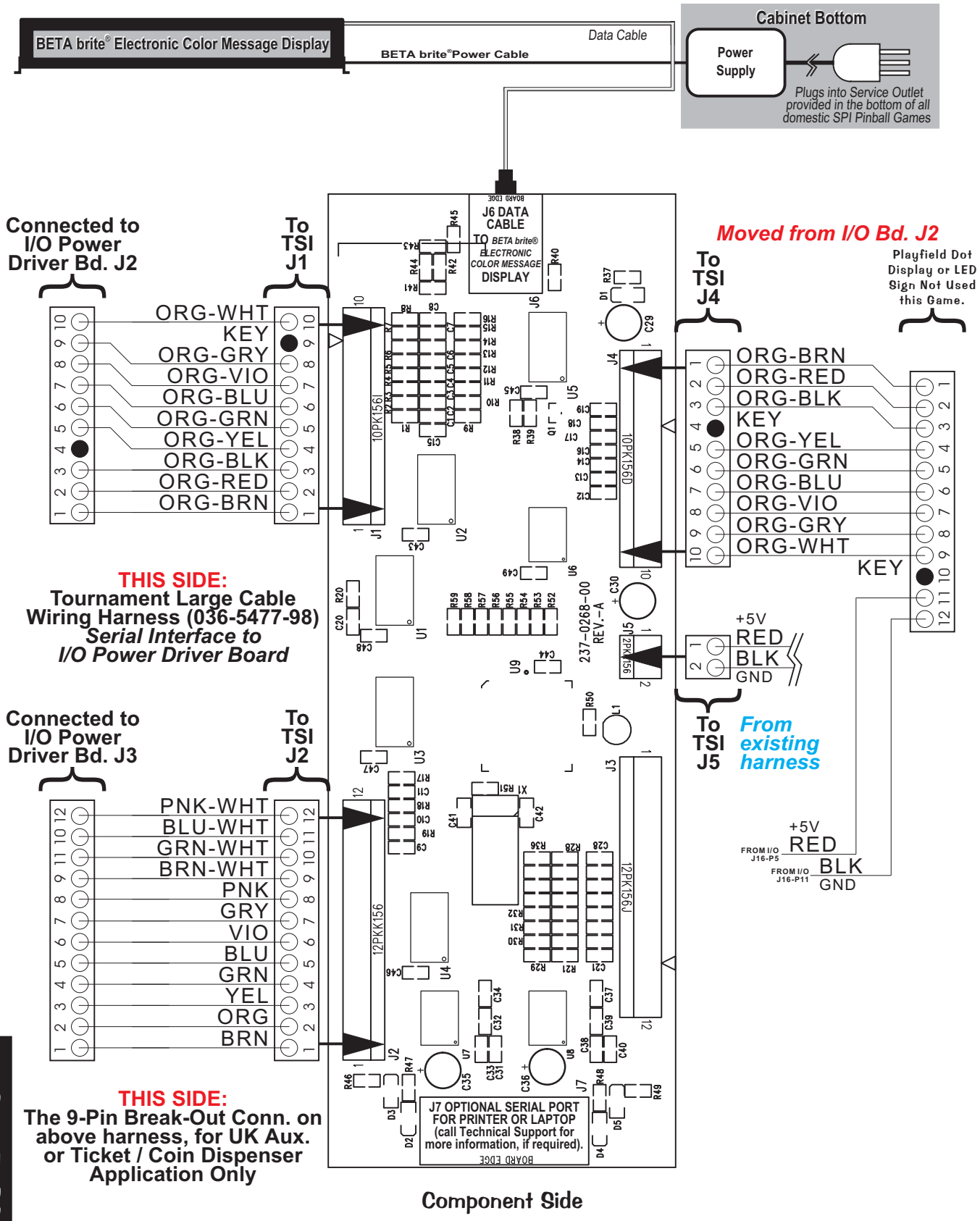

Component Side

ITEM	QTY	PART NUMBER	REF-DESIGNATOR	DESCRIPTION
--	1	520-5220-00	Tournament Serial Interface (TSI) Board	PCB Assembly

Appendixes A through J

Table of Contents for Appendixes

- **Appendix A : Pinball Game Firmware Table A1-A2**
  - ▶ **[White Star Board System and S.A.M. System Only*]**
    - ▷ ... describes the ROM / Chip Size / Program & Raw Part Number / USA Version / Check Sum and CPU/Sound PCB I & II ROM locations for Games Apollo 13 — Grand Prix (White Star Games); World Poker Tour – current (S.A.M. Games).
- **Appendix B : Semi-Conductors / I.C.'s / Relays Cross-Reference Table B1**
  - ▷ ...describes diodes and transistors with Source Number, SPI Part Number, NTE Number, ECG Number, Radio Shack Number & RCA Part Number *(If applicable).*
- **Appendix C : Production Start Date, Manual Part N°, ROM Size & Positions and Jumper W6 .. C1**
  - ▶ **[White Star Board System and S.A.M. System Only*]**
    - ▷ ...provides the Production Start Date, Manual Part Number, ROM Position(s), and Jumpers Installed for Games Apollo 13 — Grand Prix (White Star Games); World Poker Tour – current (S.A.M. Games).
- **Appendix D : Board Type Table D1-D2**
  - ▶ **[White Star Board System and S.A.M. System Only*]**
    - ▷ ...provides the Flipper**, I/O Power Driver, CPU/Sound, Display Power Supply, Dot Matrix Display, Display Controller, OPTOs and Misc. Board Part Numbers for Games Apollo 13 — Grand Prix (White Star Games); World Poker Tour – current (S.A.M. Games). ***Flipper Bd. with White Star Bd. System for A13 & Golden Eye only.)*
- **Appendix E : Generic Coil Cross-Reference Guide & Flipper Coil Table E1-E2**
  - ▶ **[White Star Board System and S.A.M. System Only*]**
    - ▷ ...provides the Coils used with Part Number and Gauge-Turns *(of the coil)* for Games Apollo 13 — Grand Prix (White Star Games); World Poker Tour – current (S.A.M. Games).
- **Appendix F : Motor Specification Table F1-F2**
  - ▶ **[White Star Board System and S.A.M. System Only*]**
    - ▷ ...provides all the Motor Function, Specifications and Part Number for Games Apollo 13 — Grand Prix (White Star Games); World Poker Tour – current (S.A.M. Games)..
- **Appendix G : Part Number Prefix Classification Codes G1**
  - ▷ ...explains how our Part Numbers are developed to help sort parts easier.
- **Appendix H : Playfield Inserts (Plastic Light Covers) H1**
  - ▷ ...gives a pictoral view with the name and Part Nr. of all the inserts used *(with Color Code Chart).*
- **Appendix I : Stand-Up Targets & Modular Stand-Up Targets I1-I2**
  - ▷ ...gives a pictoral view with the name and Part Number of all the Single Stand-Up Targets used *(with Color Code Chart).*
- **Appendix J : Coin Cards (USA & International) J1**
  - ▷ ...gives a pictoral view with the name and Part Number of all the current Coin Cards for USA, Canada, Euro and other International Countries. *For all Coin Cards and/or free Coin Card files for download, visit our website : www.sternpinball.com*

APPENDIX A

Pinball Game Firmware (White Star Board System* Only) Table

See website for the latest International Code or Updated USA version / checksums

ROM	Chip Size	Program Part Nº	USA Ver. & Check Sum	Bd. Loc.	Raw Part Nº
Apollo 13 (Note 1)					
Game ROM	(1M)	965-0208-00	**A5.01 | $09FF**	**U210**	960-5009-00
Sound	(512K)	965-0212-00	1.00 | $5244	U7	960-7001-02
Display	(4M)	965-0213-00	**A5.00 | $B92B**	**ROM 0**	960-5015-01
Voice 1	(4M)	965-0209-00	1.00 | $7FC7	U17	n/a (masked)
Voice 2	(4M)	965-0210-00	1.00 | $8E55	U21	n/a (masked)
Voice 3	(4M)	965-0211-00	1.00 | $08EE	U36	n/a (masked)
Golden Eye (Note 1)					
Game ROM	(1M)	965-0214-42	**A4.04 | $3FFF**	**U210**	960-5009-00
Sound	(512K)	965-0217-42	1.00 | $D615	U7	960-7001-02
Display	(4M)	965-0218-42	**A4.00 | $E6ED**	**ROM 0**	960-5015-01
Voice 1	(4M)	965-0215-42	1.00 | $3E32	U17	n/a (masked)
Voice 2	(4M)	965-0216-42	1.00 | $71F0	U21	n/a (masked)
Twister (Note 2)					
Game ROM	(1M)	965-0219-41	**A4.05 | $E9FF**	**U210**	960-5009-00
Sound	(512K)	965-0221-41	1.00 | $1FFF	U7	960-7001-02
Display	(4M)	965-0222-41	**A4.00 | $FD01**	**ROM 0**	960-5015-01
Voice 1	(4M)	965-0220-41	1.00 | $3650	U17	960-5015-01
Voice 2	(4M)	965-0223-41	1.00 | $9300	U21	960-5015-01
ID4: Independence Day (Note 2)					
Game ROM	(1M)	965-0224-45	**A2.02 | $9CFF**	**U210**	960-5009-00
Sound	(512K)	965-0227-45	1.00 | $222B	U7	960-7001-02
Display	(4M)	965-0228-45	**A2.00 | $ABF7**	**ROM 0**	960-5015-01
Voice 1	(4M)	965-0225-45	1.00 | $3AE1	U17	960-5015-01
Voice 2	(4M)	965-0226-45	1.00 | $206E	U21	960-5015-01
Space Jam (Note 2)					
Game ROM	(1M)	965-0229-43	**A3.00 | $E6FF**	**U210**	960-5009-00
Sound	(512K)	965-0233-43	1.00 | $F1E7	U7	960-7001-02
Display	(4M)	965-0234-43	**A3.00 | $0057**	**ROM 0**	960-5015-01
Voice 1	(4M)	965-0230-43	1.00 | $DBA8	U17	960-5015-01
Voice 2	(4M)	965-0231-43	1.00 | $DDF1	U21	960-5015-01
Voice 3	(4M)	965-0232-43	1.00 | $F32A	U36	960-5015-01
The Star Wars Trilogy - Special Edition (S.E.) (Note 2)					
Game ROM	(1M)	965-0235-56	**A4.03 | $5EFF**	**U210**	960-5009-00
Sound	(512K)	965-0238-56	1.00 | $4A7D	U7	960-7001-02
Display	(4M)	965-0239-56	**A4.00 | $8817**	**ROM 0**	960-5015-01
Voice 1	(4M)	965-0236-56	1.00 | $E66B	U17	960-5015-01
Voice 2	(4M)	965-0237-56	1.00 | $8F54	U21	960-5015-01
The Lost World: Jurassic Park (Note 2)					
Game ROM	(1M)	965-0240-53	**A2.02 | $C8FF**	**U210**	960-5009-00
Sound	(512K)	965-0243-53	1.00 | $A35B	U7	960-7001-02
Display	(4M)	965-0244-53	**A2.01 | $7F46**	**ROM 0**	960-5015-01
Voice 1	(4M)	965-0241-53	1.00 | $1D27	U17	960-5015-01
Voice 2	(4M)	965-0242-53	1.00 | $8DA4	U21	960-5015-01
The X-Files (Note 2)					
Game ROM	(1M)	965-0245-46	**A3.03 | $A2FF**	**U210**	960-5009-00
Sound	(512K)	965-0248-46	1.00 | $6648	U7	960-7001-02
Display	(4M)	965-0249-46	**A3.00 | $66D0**	**ROM 0**	960-5015-01
Voice 1	(4M)	965-0246-46	1.00 | $349D	U17	960-5015-01
Voice 2	(4M)	965-0247-46	1.00 | $629C	U21	960-5015-01
Starship Troopers (Note 3)					
Game ROM	(1M)	965-0250-59	**A2.00 | $85FF**	**U210**	960-5009-00
Sound	(512K)	965-0253-59	1.00 | $64B2	U7	960-7001-02
Display	(4M)	965-0254-59	**A2.00 | $E77B**	**ROM 0**	960-5015-01
Voice 1	(4M)	965-0251-59	1.00 | $152A	U17	960-5015-01
Voice 2	(4M)	965-0252-59	1.00 | $0291	U21	960-5015-01
Voice 3	(4M)	965-0255-59	1.00 | $95A7	U36	960-5015-01
Viper Night Drivin' (Note 4)					
Game ROM	(1M)	965-0266-35	**A2.01 | $C5FF**	**U210**	960-5009-00
Sound	(512K)	965-0271-35	1.00 | $4DF8	U7	960-7001-02
Display	(4M)	965-0272-35	**A2.01 | $C17D**	**ROM 0**	960-5015-01
Voice 1	(4M)	965-0267-35	1.00 | $8018	U17	960-5015-01
Voice 2	(4M)	965-0268-35	1.00 | $2157	U21	960-5015-01
Voice 3	(4M)	965-0269-35	1.00 | $B5A6	U36	960-5015-01
Voice 4	(4M)	965-0270-35	1.00 | $D01E	U37	960-5015-01
Lost In Space (Note 4)					
Game ROM	(1M)	965-0282-60	**A1.01 | $B2FF**	**U210**	960-5009-00
Sound	(512K)	965-0287-60	1.00 | $A6AF	U7	960-7001-02
Display	(4M)	965-0288-60	**A1.02 | $32AB**	**ROM 0**	960-5015-01
Voice 1	(4M)	965-0283-60	1.00 | $4391	U17	960-5015-01
Voice 2	(4M)	965-0284-60	1.00 | $8215	U21	960-5015-01
Voice 3	(4M)	965-0285-60	1.00 | $5B32	U36	960-5015-01
Voice 4	(4M)	965-0286-60	1.00 | $8971	U37	960-5015-01
Godzilla (Note 4)					
Game ROM	(1M)	965-0289-40	**A2.05| $B1FF**	**U210**	960-5009-00
Sound	(512K)	965-0294-40	1.00 | $0CC8	U7	960-7001-02
Display	(4M)	965-0295-40	**A2.00 | $C929**	**ROM 0**	960-5015-01
Voice 1	(4M)	965-0290-40	1.00 | $0D75	U17	960-5015-01
Voice 2	(4M)	965-0291-40	1.00 | $CCCF	U21	960-5015-01
Voice 3	(4M)	965-0292-40	1.00 | $227F	U36	960-5015-01
Voice 4	(4M)	965-0293-40	1.00 | $DB69	U37	960-5015-01
South Park (Notes 4, 5)					
Game ROM	(1M)	965-0301-71	**A1.03 | $58FF**	**U210**	960-5009-00
Sound	(512K)	965-0306-71	1.00 | $1286	U7	960-7001-02
Display	(4M)	965-0307-71	**A1.01 | $166F**	**ROM 0**	960-5015-01
Voice 1	(8M)	965-0302-71	1.00 | $7BF8	U17	960-5016-00
Voice 2	(8M)	965-0303-71	1.00 | $9CCC	U21	960-5016-00
Voice 3	(8M)	965-0304-71	1.00 | $ADD9	U36	960-5016-00
Voice 4	(8M)	965-0305-71	1.00 | $6659	U37	960-5016-00
Harley-Davidson® (Notes 4, 5, 6) *Original (1999-2001)*					
Game ROM	(1M)	965-0319-67	**A1.03 | $3EFF**	**U210**	960-5009-00
Sound	(512K)	965-0320-67	1.00 | $F4FF	U7	960-7001-02
Display	(4M)	965-0321-67	**A1.04 | $FC7C**	**ROM 0**	960-5015-01
Voice 1	(8M)	965-0322-67	1.00 | $CD26	U17	960-5016-00
Voice 2	(8M)	965-0323-67	1.00 | $9396	U21	960-5016-00
Voice 3	(8M)	965-0324-67	1.00 | $FB72	U36	960-5016-00
Voice 4	(4M)	965-0325-67	1.00 | $6100	U37	960-5015-01
▶ **Harley-Davidson® (Notes 4, 5, 6, 8) *2nd Edition (2002-2003)***					
Game ROM	(1M)	965-0319-67**A**	**A1.08 | $23FF**	**U210**	960-5009-00
Display	(4M)	965-0321-67**A**	**A1.05 | $B594**	**ROM 0**	960-5015-01
▶ **Harley-Davidson® (Notes 4, 5, 6, 8) *3rd Edition (2004)***					
Game ROM	(1M)	965-0319-87	**A4.00 | $1CFF**	**U210**	960-5009-00
Display	(4M)	965-0321-87	**A4.00 | $F4FF**	**U5**	960-5015-01
Striker Xtreme (Notes 4, 5)					
Game ROM	(1M)	965-0326-68	**A1.03 | $E4FF**	**U210**	960-5009-00
Sound	(512K)	965-0327-68	1.00 | $3BCA	U7	960-7001-02
Display	(4M)	965-0328-68	**A1.03 | $1957**	**ROM 0**	960-5015-01
Voice 1	(8M)	965-0329-68	1.00 | $482A	U17	960-5016-00
Voice 2	(8M)	965-0330-68	1.00 | $7312	U21	960-5016-00
Voice 3	(8M)	965-0331-68	1.00 | $DE2F	U36	960-5016-00
Voice 4	(8M)	965-0332-68	1.00 | $C508	U37	960-5016-00
NFL (Notes 4, 5) *Not on CD-R or Website: Code through Distributor Only.*					
Game ROM	(1M)	965-0339-73	**A1.00 | $D2FF**	**U210**	960-5009-00
Sound	(512K)	965-0340-73	1.00 | $	U7	960-7001-02
Display	(4M)	965-0341-73	**A1.01 | $845A**	**ROM 0**	960-5015-01
Voice 1	(8M)	965-0342-73	1.00 | $	U17	960-5016-00
Voice 2	(8M)	965-0343-73	1.00 | $	U21	960-5016-00
Voice 3	(8M)	965-0344-73	1.00 | $	U36	960-5016-00
Voice 4	(8M)	965-0345-73	1.00 | $	U37	960-5016-00
Sharkey's Shootout (Notes 4, 5)					
Game ROM	(1M)	965-0333-72	**A2.11 | $49FF**	**U210**	960-5009-00
Sound	(512K)	965-0334-72	1.01 | $9796	U7	960-7001-02
Display	(4M)	965-0335-72	**A2.01 | $6C33**	**ROM 0**	960-5015-01
Voice 1	(8M)	965-0336-72	1.00 | $58EA	U17	960-5016-00
Voice 2	(8M)	965-0337-72	1.00 | $272B	U21	960-5016-00
Voice 3	(8M)	965-0338-72	1.00 | $41AE	U36	960-5016-00
High Roller Casino (Notes 4, 5)					
Game ROM	(1M)	965-0346-65	**A3.00 | $90FF**	**U210**	960-5009-00
Sound	(512K)	965-0347-65	1.00 | $581C	U7	960-7001-02
Display	(4M)	965-0348-65	**A3.00 | $74B3**	**ROM 0**	960-5015-01
Voice 1	(8M)	965-0349-65	1.00 | $E12D	U17	960-5016-00
Voice 2	(8M)	965-0350-65	1.00 | $38F4	U21	960-5016-00
Voice 3	(8M)	965-0351-65	1.00 | $1B54	U36	960-5016-00
Voice 4	(8M)	965-0352-65	1.00 | $D720	U37	960-5016-00
Austin Powers™ (Notes 4, 5)					
Game ROM	(1M)	965-0353-74	**A3.02 | $5DFF**	**U210**	960-5009-00
Sound	(512K)	965-0354-74	1.00 | $DA7B	U7	960-7001-02
Display	(4M)	965-0035-74	**A3.00 | $6A34**	**ROM 0**	960-5015-01
Voice 1	(8M)	965-0356-74	1.00 | $D2B9	U17	960-5016-00
Voice 2	(8M)	965-0357-74	1.00 | $9E75	U21	960-5016-00
Voice 3	(8M)	965-0358-74	1.00 | $51F3	U36	960-5016-00
Voice 4	(8M)	965-0359-74	1.00 | $0AE5	U37	960-5016-00
MONOPOLY® (Notes 4, 5)					
Game ROM	(1M)	965-0360-75	**A3.20 | $07FF**	**U210**	960-5009-00
Sound	(512K)	965-0361-75	1.00 | $8C18	U7	960-7001-02
Display	(4M)	965-0362-75	**A3.01 | $A381**	**ROM 0**	960-5015-01
Voice 1	(8M)	965-0363-75	1.00 | $35E6	U17	960-5016-00
Voice 2	(8M)	965-0364-75	1.00 | $B35A	U21	960-5016-00
Voice 3	(8M)	965-0365-75	1.00 | $8A9F	U36	960-5016-00
Playboy (Notes 4, 5, 7)					
Game ROM	(1M)	965-0367-76	**A5.00 | $7DFF**	**U210**	960-5009-00
Sound	(512K)	965-0368-76	1.02 | $E7C2	U7	960-7001-02
Display	(4M)	965-0369-76	**A5.00 | $A5FF**	**ROM 0**	960-5015-01
Voice 1	(8M)	965-0370-76	1.00 | $9ABE	U17	960-5016-00
Voice 2	(8M)	965-0371-76	1.00 | $9F34	U21	960-5016-00
Voice 3	(8M)	965-0372-76	1.00 | $374B	U36	960-5016-00
Voice 4	(8M)	965-0373-76	1.00 | $237A	U37	960-5016-00
RollerCoaster Tycoon™ (Notes 4, 5, 7)					
Sound	(512K)	965-0374-78	1.00 | $F663	U7	960-7001-02
Game ROM	(1M)	965-0375-78	**A7.02| $E5FF**	**U210**	960-5009-00
Voice 1	(8M)	965-0377-78	1.00 | $3C4A	U17	960-5016-00
Voice 2	(8M)	965-0378-78	1.00 | $057A	U21	960-5016-00
Voice 3	(8M)	965-0379-78	1.00 | $04D7	U36	960-5016-00
Display	(4M)	965-0376-78	**A7.01 | $8DDB**	**U5** Disp. Cntrlr.	
The Simpsons™ Pinball Party (Notes 4, 5, 7)					
Sound	(512K)	965-0381-77	1.01 | $A7EE	U7	960-7001-02
Game ROM	(1M)	965-0382-77	**A4.00 | $4FFF**	**U210**	960-5009-00
Voice 1	(8M)	965-0383-77	1.00 | $9719	U17	960-5016-00
Voice 2	(8M)	965-0384-77	1.00 | $16ED	U21	960-5016-00
Voice 3	(8M)	965-0385-77	1.00 | $ADCE	U36	960-5016-00
Voice 4	(8M)	965-0386-77	1.00 | $E7E5	U37	960-5016-00
Display	(4M)	965-0387-77	**A4.00 | $8A03**	**U5** DC PCB	960-5015-01
Terminator® 3: Rise of the Machines™ (Notes 4, 5, 7)					
Sound	(512K)	965-0388-79	1.00 | $D2FD	U7	960-7001-02
Game ROM	(1M)	965-0389-79	**A4.00 | $F8FF**	**U210**	960-5009-00
Voice 1	(8M)	965-0390-79	1.00 | $1838	U17	960-5016-00
Voice 2	(8M)	965-0391-79	1.00 | $F0D5	U21	960-5016-00
Voice 3	(8M)	965-0392-79	1.00 | $89DA	U36	960-5016-00
Voice 4	(8M)	965-0393-79	1.00 | $1200	U37	960-5016-00
Display	(4M)	965-0394-79	**A4.00 | $6E49**	**U5** DC PCB	960-5015-01
The Lord of the Rings™ (Notes 7, 8)					
Sound	(512K)	965-0401-80	1.01 | $36BC	U7	960-7001-02
Game ROM	(1M)	965-0402-80	**A10.00 | $84FF**	**U210**	960-5009-00
Voice 1	(8M)	965-0403-80	1.00 | $1792	U17	960-5016-00
Voice 2	(8M)	965-0404-80	1.00 | $67F1	U21	960-5016-00
Voice 3	(8M)	965-0405-80	1.00 | $89B6	U36	960-5016-00
Voice 4	(8M)	965-0406-80	1.00 | $EA49	U37	960-5016-00
Display	(4M)	965-0407-80	**A10.00 | $1669**	**U5** DC PCB	960-5015-01

Sound & Voice 1-4 identical to above H-D® Original.

footnotes : 1 — 8 *see the bottom of the next page (**A2**).*

APPENDIX A

Pinball Game Firmware (White Star Board System* & S.A.M. System** Only) Table

See website for the latest International Code or Updated USA version / checksums

Ripley's Believe It or Not!® (Notes 7, 8)

ROM	Chip Size	Program Part Nº	USA Ver. & Check Sum	Bd. Loc.	Raw Part Nº
Sound	(512K)	965-0408-81	1.00 | $D93D	U7	960-7001-02
Game ROM	(1M)	965-0409-81	**A3.20 | $43FF**	**U210**	960-5009-00
Voice 1	(8M)	965-0410-81	1.00 | $067B	U17	960-5016-00
Voice 2	(8M)	965-0411-81	1.00 | $C8B8	U21	960-5016-00
Voice 3	(8M)	965-0412-81	1.00 | $64C2	U36	960-5016-00
Voice 4	(8M)	965-0413-81	1.00 | $5341	U37	960-5016-00
Display	(4M)	965-0414-81	**A3.00 | $DE4B**	**U5** DC PCB	960-5015-01

Elvis® (Notes 7, 8)

Sound	(512K)	965-0415-84	1.00 | $8CD2	U7	960-7001-02
Game ROM	(1M)	965-0416-84	**A5.00 | $50FF**	**U210**	960-5009-00
Voice 1	(8M)	965-0417-84	1.00 | $538D	U17	960-5016-00
Voice 2	(8M)	965-0418-84	1.00 | $8BCD	U21	960-5016-00
Voice 3	(8M)	965-0419-84	1.00 | $60F8	U36	960-5016-00
Voice 4	(8M)	965-0420-84	1.00 | $14D8	U37	960-5016-00
Display	(4M)	965-0421-84	**A5.00 | $A1F6**	**U5** DC PCB	960-5015-01

The Sopranos℠ (Notes 7, 8)

Sound	(512K)	965-0422-85	4.00 | $9B5A	U7	960-7001-02
Game ROM	(1M)	965-0423-85	**A5.00 | $5BFF**	**U210**	960-5009-00
Voice 1	(8M)	965-0424-85	3.00 | $F01E	U17	960-5016-00
Voice 2	(8M)	965-0425-85	1.04 | $C14C	U21	960-5016-00
Voice 3	(8M)	965-0426-85	1.04 | $47A3	U36	960-5016-00
Voice 4	(8M)	965-0427-85	1.04 | $ADCD	U37	960-5016-00
Display	(4M)	965-0428-85	**A5.00 | $B4BB**	**U5** DC PCB	960-5015-01

NASCAR® (Notes 7, 8)

Sound	(512K)	965-0429-86	2.00 | $32B3	U7	960-7001-02
Game ROM	(1M)	965-0430-86	**A4.50 | $39FF**	**U210**	960-5009-00
Voice 1	(8M)	965-0431-86	2.00 | $CFFB	U17	960-5016-00
Voice 2	(8M)	965-0432-86	2.00 | $22C0	U21	960-5016-00
Voice 3	(8M)	965-0433-86	2.00 | $5FC8	U36	960-5016-00
Voice 4	(8M)	965-0434-86	2.00 | $2902	U37	960-5016-00
Display	(4M)	965-0435-86	**A4.00 | $92BD**	**U5** DC PCB	960-5015-01

Grand Prix (Notes 7, 8)

Sound	(512K)	965-0429-91	V1.00 | $6F89	U7	960-7001-02
Game ROM	(1M)	965-0430-91	**A4.50 | $5EFF**	**U210**	960-5009-00
Voice 1	(8M)	965-0431-91	1.00 | $CE0E	U17	960-5016-00
Voice 2	(8M)	965-0432-91	1.00 | $F4C6	U21	960-5016-00
Voice 3	(8M)	965-0433-91	1.00 | $057D	U36	960-5016-00
Voice 4	(8M)	965-0434-91	1.00 | $2646	U37	960-5016-00
Display	(4M)	965-0435-91	**A4.00 | $DA8E**	**U5** DC PCB	960-5015-01

[NDSE] (Notes 7, 8) *Call for more info if code update required.*

Sound	(512K)	965-0436-97	U7	960-7001-02
Game ROM	(1M)	965-0437-97	**U210**	960-5009-00
Voice 1	(8M)	965-0438-97	U17	960-5016-00
Voice 2	(8M)	965-0439-97	U21	960-5016-00
Voice 3	(8M)	965-0440-97	U36	960-5016-00
Voice 4	(8M)	965-0441-97	U37	960-5016-00
Display	(4M)	965-0442-97	**U5** DC PCB	960-5015-01

**** GAMES BELOW THIS LINE / NEXT COLUMN ARE S.A.M. SYSTEM GAMES**

TO ORDER MEMORY STICK WITH GAME FILES FROM YOUR DISTRIBUTOR, USE SPI PART NUMBER 970-0128-00 & INCLUDE THE GAME NAME / LANGUAGE FILE(S) DESIRED.

World Poker Tour™ Pinball (WPT) (Notes 7, 9)

Boot B-02	(8M)	**965-BOOT-SAM**	**1.04** | $7E62	**U9**	*960-5016-00 unprogrammed*

Memory Stick 128MB (970-0128-00)	**Version**	**System**	**Bin Files:**
English + Spanish	1.12AL	1.17+	WPT0112AL.bin
English Only	1.12A	1.17+	WPT0112A.bin
English + French	1.12AF	1.17+	WPT0112AF.bin
French Only	1.12F	1.17+	WPT0112F.bin
German + French	1.12GF	1.17+	WPT0112GF.bin
German Only	1.12G	1.17+	WPT0112G.bin
English + Italian	1.12AI	1.17+	WPT0112AI.bin
Italian Only	1.12I	1.17+	WPT0112I.bin

NOTE: THE TYPICAL SIZE PER UNZIPPED BIN FILE IS 25MB – 30MB+/–

The Simpsons™ Kooky Carnival Redemption (Note 9)

Boot B-02	(8M)	**965-BOOT-SAM**	**1.04** | $7E62	**U9**	*960-5016-00 unprogrammed*

Memory Stick 128MB (970-0128-00)	**Version**	**Bin Files:**
English Only	1.05	SKC0105.bin
English New Jersey Only	0.09NJ	SKC0090NJ.bin

NOTE: THE TYPICAL SIZE PER UNZIPPED BIN FILE IS 5.5MB +/–

©Disney's Pirates of the Caribbean Pinball (POTC) (Notes 7, 9)

Boot B-02	(8M)	**965-BOOT-SAM**	**1.06** | $2014	**U9**	*960-5016-00 unprogrammed*

Memory Stick 128MB (970-0128-00)	**Version**	**System**	**Bin Files:**
English + Spanish	1.15AS	1.17+	POTC115AS.bin
English + French	1.15AF	1.17+	POTC115AF.bin
German + French	1.15GF	1.17+	POTC115GF.bin
English + Italian	1.15AI	1.17+	POTC115AI.bin

NOTE: THE TYPICAL SIZE PER UNZIPPED BIN FILE IS 25MB – 30MB+/–

Family Guy™ Pinball (FG) (Notes 7, 9)

Boot B-02	(8M)	**965-BOOT-SAM**	**2.09** | $10A3	**U9**	*960-5016-00 unprogrammed*

Memory Stick 128MB (970-0128-00)	**Version**	**System**	**Bin Files:**
English + Spanish	10.00AL	1.23+	FG1000AL.bin
English + French	10.00AF	1.23+	FG1000AF.bin
English + German	10.00AG	1.23+	FG1000GF.bin
English + Italian	10.00AI	1.23+	FG1000AI.bin

NOTE: THE TYPICAL SIZE PER UNZIPPED BIN FILE IS 25MB – 30MB+/–

Spider-Man™ Pinball (S-M) (Notes 7, 9)

Boot B-02	(8M)	**965-BOOT-SAM**	**2.10** | $F625	**U9**	*960-5016-00 unprogrammed*

Memory Stick 128MB (970-0128-00)	**Version**	**System**	**Bin Files:**
English + Spanish	1.3ES	1.27+	spd_1_30_es.bin
English + French	1.3EF	1.27+	spd_1_30_ef.bin
German+French	1.3GF	1.27+	spd_1_30_gf.bin
English + Italian	1.3EI	1.27+	spd_1_30_ei.bin

NOTE: THE TYPICAL SIZE PER UNZIPPED BIN FILE IS 25MB – 30MB+/–

footnotes:

1 ROMs on CPU/Sound Bd.: 520-5136-**00** (Stereo) & Display Cont. Bd.: 520-5055-01
2 ROMs on CPU/Sound Bd.: 520-5136-**10** (Mono) & Display Cont. Bd.: 520-5055-01
3 ROMs on CPU/Sound Board: 520-5136-**15*** (Mono) (*FCC 11-97) & Display Controller Board: 520-5055-**02*** (*FCC 11-97)

APPENDIX A

Pinball Game Firmware Table

EPROM	Chip Size	Program Part Nº	USA Ver.	Bd. Loc.	Raw Part Nº
Laser War					
CPU	(256K)	965-0004-00	LWAR.C5	C5	960-5007-00
Sound (Old)	(256K)	965-0005-00		J5	960-5007-00
Sound (Old)	(256K)	965-0006-00		J6	960-5007-00
Sound (Old)	(256K)	965-0007-00		J7	960-5007-00
			- OR -		
Sound	(256K)	965-0008-00		7F	960-5007-00
Sound 1	(512K)	965-0009-00		6F	960-7001-02
Sound 2	(512K)	965-0010-00		4F	960-7001-02
Secret Service					
CPU	(256K)	965-0011-00	A4-6	B5	960-5007-00
CPU	(256K)	965-0012-00	A4-6	C5	960-5007-00
Voice 1	(512K)	965-0014-00		6F	960-7001-02
Voice 2	(512K)	965-0015-00		4F	960-7001-02
Sound	(256K)	965-0013-00		7F	960-5007-00
Torpedo Alley					
CPU	(256K)	965-0016-00	A2-1	B5	960-5007-00
CPU	(256K)	965-0017-00	A2-1	C5	960-5007-00
Voice 1	(512K)	965-0019-00		6F	960-7001-02
Voice 2	(512K)	965-0020-00		4F	960-7001-02
Sound	(256K)	965-0018-00		7F	960-5007-00
Time Machine					
CPU	(128K)	965-0021-00	A2-4	B5	960-5006-00
CPU	(256K)	965-0022-00	A2-4	C5	960-5007-00
Voice 1	(512K)	965-0024-00		6F	960-7001-02
Voice 2	(512K)	965-0025-00		4F	960-7001-02
Sound	(256K)	965-0023-00		7F	960-5007-00
Playboy 35th Anniversary					
CPU	(256K)	965-0046-00	A2-4	B5	960-5007-00
CPU	(256K)	965-0047-00	A2-4	C5	960-5007-00
Voice 1	(512K)	965-0049-00		6F	960-7001-02
Voice 2	(512K)	965-0050-00		4F	960-7001-02
Sound	(256K)	965-0048-00		7F	960-5007-00
ABC Monday Night Football					
CPU	(128K)	965-0031-00	A2-7	B5	960-5006-00
CPU	(256K)	965-0032-00	A2-7	C5	960-5007-00
Voice 1	(512K)	965-0034-00		6F	960-7001-02
Voice 2	(512K)	965-0035-00		4F	960-7001-02
Sound	(256K)	965-0033-00		7F	960-5007-00
Robocop					
CPU	(256K)	965-0036-00	A3-4	B5	960-5007-00
CPU	(256K)	965-0037-00	A3-4	C5	960-5007-00
Voice 1	(512K)	965-0039-00		6F	960-7001-02
Voice 2	(512K)	965-0040-00		4F	960-7001-02
Sound	(256K)	965-0038-00		7F	960-5007-00
Phantom of the Opera					
CPU	(128K)	965-0026-00	A3-2	B5	960-5006-00
CPU	(256K)	965-0027-00	A3-2	C5	960-5007-00
Voice 1	(512K)	965-0029-00		6F	960-7001-02
Voice 2	(512K)	965-0030-00		4F	960-7001-02
Sound	(256K)	965-0028-00		7F	960-5007-00
Back to the Future					
CPU	(256K)	965-0041-00	A2-0	B5	960-5007-00
CPU	(256K)	965-0042-00	A2-0	C5	960-5007-00
Voice 1	(512K)	965-0044-00		6F	960-7001-02
Voice 2	(512K)	965-0045-00		4F	960-7001-02
Sound	(256K)	965-0043-00		7F	960-5007-00
The Simpsons					
CPU	(128K)	965-0051-00	A2-7	B5	960-5006-00
CPU	(256K)	965-0052-00	A2-7	C5	960-5007-00
Voice 1	(512K)	965-0054-00		6F	960-7001-02
Voice 2	(512K)	965-0055-00		4F	960-7001-02
Sound	(256K)	965-0053-00		7F	960-5007-00
Checkpoint					
CPU	(128K)	965-0056-00	A1-7	B5	960-5006-00
CPU	(256K)	965-0134-00	A1-7	C5	960-5007-00
Voice 1	(1M)	965-0057-00		F7	960-5009-00
Voice 2	(1M)	965-0058-00		F5	960-5009-00
Sound	(256K)	965-0059-00		F4	960-5007-00
Display	(512K)	965-0060-00	CP80	U8	960-7001-02
Teenage Mutant Ninja Turtles					
CPU	(128K)	965-0061-00	A1.04	B5	960-5006-00
CPU	(256K)	965-0062-00	A1.04	C5	960-5007-00
Voice 1	(1M)	965-0063-00		F5/6	960-5009-00
Voice 2	(1M)	965-0064-00		F4/5	960-5009-00
Sound	(256K)	965-0065-00		F7	960-5007-00
Display	(512K)	965-0066-00	A1.04	U8	960-7001-02
Batman					
CPU	(128K)	965-0067-00	A1.06	B5	960-5006-00
CPU	(256K)	965-0135-00	A1.06	C5	960-5007-00
Voice 1	(2M)	965-0068-00		U17	960-5010-00
Voice 2	(1M)	965-0069-00		U21	960-5009-00
Sound	(256K)	965-0070-00		U7	960-5007-00
Display	(1M)	965-0071-00	A1.06	U8	960-5009-00
Star Trek 25th Anniversary					
CPU	(512K)	965-0072-00	A2.01	C5	960-7001-02
Voice 1	(2M)	965-0073-00		U17	960-5010-00
Voice 2	(2M)	965-0074-00		U21	960-5010-00
Sound	(256K)	965-0075-00		U7	960-5007-00
Display	(1M)	965-0076-00	A1.09	U8	960-5009-00
Hook					
CPU	(512K)	965-0077-00	A4.08	C5	960-7001-02
Voice 1	(2M)	965-0078-00		U17	960-5010-00
Voice 2	(2M)	965-0079-00		U21	960-5010-00
Sound	(256K)	965-0080-00		U7	960-5007-00
Display	(1M)	965-0081-00	A4.01	U8	960-5009-00
Lethal Weapon 3					
CPU	(512K)	965-0082-00	A2.08	C5	960-7001-02
Voice 1	(2M)	965-0083-00		U17	960-5010-00
Voice 2	(2M)	965-0084-00		U21	960-5010-00
Sound	(256K)	965-0085-00		U7	960-5007-00
Display	(2M)	965-0086-00	A2.06	ROM 0	960-5010-00
Display	(2M)	965-0087-00	A2.06	ROM 1	960-5010-00
	(Used on Display PCB 520-5055-00)				
			-OR-		
Display	(4M)	965-0087-04	A2.06	ROM 0	960-5015-00
	(Used on Display PCB 520-5055-01)				
Star Wars					
CPU	(512K)	965-0119-00	A1.03	C5	960-7001-02
Voice 0	(4M)	965-0132-00		U17	960-5015-00
Voice 1	(2M)	965-0133-00		U21	960-5010-00
Sound	(256K)	965-0131-00		U7	960-5007-00
Display	(2M)	965-0120-00	A1.04	ROM 0	960-5010-00
Display	(2M)	965-0121-00	A1.04	ROM 1	960-5010-00
	(Used on Display PCB 520-5055-00)				
			-OR-		
Display	(4M)	965-0122-00	A1.05	ROM 0	960-5015-00
	(Used on Display PCB 520-5055-01)				
Rocky & Bullwinkle & Friends					
CPU	(512K)	965-0138-00	A1.30	C5	960-7001-02
Voice 0	(4M)	965-0139-00		U17	960-5015-00
Voice 1	(2M)	965-0140-00		U21	960-5010-00
Sound	(256K)	965-0141-00		U7	960-5007-00
Display	(4M)	965-0142-00	A1.30	ROM 0	960-5015-00
Jurassic Park					
CPU	(512K)	965-0143-00	A5.13	C5	960-7001-02
Voice 0	(4M)	965-0144-00		U17	960-5015-00
Voice 1	(2M)	965-0145-00		U21	960-5010-00
Sound	(256K)	965-0146-00		U7	960-5007-00
Display	(4M)	965-0147-00	A5.10	ROM 0	960-5015-00
Last Action Hero					
CPU	(512K)	965-0148-00	A1.12	C5	960-7001-02
Voice 0	(4M)	965-0149-00		U17	960-5015-00
Voice 1	(2M)	965-0150-00		U21	960-5010-00
Sound	(256K)	965-0151-00		U7	960-5007-00
Display	(4M)	965-0152-00	A1.06	ROM 0	960-5015-00
Tales from the Crypt					
CPU	(512K)	965-0157-00	A3.03	C5	960-7001-02
Voice 0	(4M)	965-0158-00		U17	960-5015-00
Voice 1	(2M)	965-0159-00		U21	960-5010-00
Sound	(256K)	965-0160-00		U7	960-5007-00
Display	(4M)	965-0161-00	A3.01	ROM 0	960-5015-00
The Who's Tommy					
CPU	(512K)	965-0162-00	A4.00	C5	960-7001-02
Voice 1	(4M)	965-0165-00		U17	960-5015-00
Voice 2	(4M)	965-0166-00		U21	960-5015-00
Voice 3	(4M)	965-0167-00		U36	960-5015-00
Voice 4	(4M)	965-0168-00		U37	960-5015-00
Sound	(512K)	965-0164-00		U7	960-7001-02
Display	(4M)	965-0163-00	A4.00	ROM 0	960-5015-00
WWF Royal Rumble					
CPU	(512K)	965-0169-00	A1.06	C5	960-7001-02
Voice 1	(4M)	965-0172-00		U17	960-5015-00
Voice 2	(4M)	965-0173-00		U21	960-5015-00
Voice 3	(4M)	965-0174-00		U36	960-5015-00
Sound	(512K)	965-0171-00		U7	960-7001-02
Display	(4M)	965-0170-00	A1.02	ROM 0	960-5015-00
Guns N' Roses					
CPU	(512K)	965-0175-00	A3.00	C5	960-7001-02
Voice 1	(4M)	965-0178-00		U17	960-5015-00
Voice 2	(4M)	965-0179-00		U21	960-5015-00
Voice 3	(4M)	965-0180-00		U36	960-5015-00
Voice 4	(4M)	965-0181-00		U37	960-5015-00
Sound	(512K)	965-0177-00		U7	960-7001-02
Display	(4M)	965-0176-00	A3.00	ROM 0	960-5015-00
Maverick *					
CPU	(512K)	965-0182-00	A4.04	C5	960-7001-02
Voice 1	(4M)	965-0186-00		U17	960-5015-00
Voice 2	(4M)	965-0187-00		U21	960-5015-00
Voice 3	(4M)	965-0187-01		U36	960-5015-00
Sound	(512K)	965-0185-00		U7	960-7001-02
Display*	(4M)	965-0183-00	A4.01	ROM 0	960-5015-00
Display*	(4M)	965-0184-00	A4.01	ROM 3	960-5015-00
Mary Shelley's Frankenstein *					
CPU	(512K)	965-0188-00	A1.03	C5	960-7001-02
Voice 1	(4M)	965-0192-00		U17	960-5015-00
Voice 2	(4M)	965-0193-00		U21	960-5015-00
Voice 3	(4M)	965-0194-00		U36	960-5015-00
Sound	(512K)	965-0191-00		U7	960-7001-02
Display*	(4M)	965-0189-00	A1.03	ROM 0	960-5015-00
Display*	(4M)	965-0190-00	A1.03	ROM 3	960-5015-00
Baywatch *		(CPU Board 520-5003-04)			
CPU	(512K)	965-0195-00	A4.00	C5	960-7001-02
Voice 1	(4M)	965-0196-00		U17	960-5015-00
Voice 2	(4M)	965-0197-00		U21	960-5015-00
Sound	(512K)	965-0199-00		U7	960-7001-02
Display*	(4M)	965-0200-00	A4.00	ROM 0	960-5015-00
Display*	(4M)	965-0201-00	A4.00	ROM 3	960-5015-00
Batman Forever *		(CPU Board 520-5003-04)			
CPU	(512K)	965-0202-00	A3.02	C5	960-7001-02
Voice 1	(4M)	965-0203-00		U17	960-5015-00
Voice 2	(4M)	965-0204-00		U21	960-5015-00
Sound	(512K)	965-0205-00		U7	960-7001-02
Display*	(4M)	965-0206-00	A3.00	ROM 0	960-5015-00
Display*	(4M)	965-0207-00	A3.00	ROM 3	960-5015-00

* ***Note:*** *Display* ***EPROMS (4M)*** *for* ***Maverick*** *thru* ***Batman Forever*** *require an access time of* ***120 Nsec*** *or faster.*

APPENDIX B

Semi-Conductors / Integrated Circuits (I.C.) / Relays Cross-Reference Table

Table №	Type	Source Number	STERN® PINBALL	N T E®	E C G®	Radio Shack®	R C A®
	RECTIFICATION, BLOCKING, DAMPENING DIODES AND/OR LIGHT EMITTING DIODES (LEDs)						
1	Diode	1N4001	112-5001-00	NTE552	ECG552	- — - — -	SK9000
	Diode	1N4004	112-5003-00	NTE116	ECG116	276-1103	SK3312
	Diode	1N5401	112-0056-00	NTE5801	ECG5801	276-1143	SK9004
	Diode	1N5404	112-5004-00	NTE5804	ECG5804	276-1144	SK9007
	Diode	T6A10L	112-5006-01	NTE5812	ECG5812	- — - — -	- — - — -
	Diode	FR302	112-5009-00	NTE588	ECG588	- — - — -	SK5014
	Diode, Signal	1N914	112-5014-00	- — - — -	- — - — -	- — - — -	- — - — -
	LED	**MT5000UR** or **TLRH180P** (T1-3/4 GaAlAs)	165-5052-00 *(old SPI Part №: 165-5100-00)*	- — - — -	- — - — -	276-066B	- — - — -
	ZENER DIODES						
2	Diode	1N4742A 12v	112-0061-00	NTE142A	ECG142A	276-563	SK12V
	Diode	1N4760B 68v	112-0062-00B	NTE5092A	ECG5092A	- — - — -	SK68V
	Diode	1N4764A 100v	112-0049-00A	NTE5096A	ECG5096A	- — - — -	SK100V
	Diode	1N5228 3.9v	112-0053-00	NTE5007A	ECG5007A	- — - — -	SK3A9
	Diode	1N5234B 6.2v	112-0047-00B	NTE5013A	ECG5013A	276-561	SK6A2
	Diode	1N5379 110v	112-0072-00	NTE5157	ECG5157	- — - — -	SK110X
	Diode	1N6267A 6.8v	112-5011-00	NTE4902	ECG4902	- — - — -	- — - — -
	Diode	1N4752A 33v	112-5010-00A	NTE147A	ECG147A	- — - — -	SK33V
	Diode	1N4736 6.8v 1w	112-5007-00	NTE5071A	ECG5071A	- — - — -	- — - — -
	TRANSISTORS - TYPE FET, NPN, PNP AND/OR SCR						
3	FET Trans.	STP20N10L	110-0106-00	NTE2987	ECG2987	- — - — -	- — - — -
	FET Trans.	STP19N06L	110-0088-00	NTE2985	ECG2985	- — - — -	- — - — -
	FET Trans.	VN02N	110-0089-00	- — - — -	- — - — -	- — - — -	- — - — -
	NPN Trans.	2N4401	110-0073-00	NTE85	ECG85	276-2009	SK3124A
	NPN Trans.	2N6427	110-0070-00	NTE48	ECG48	- — - — -	SK4906
	NPN Trans.	MJE340	110-0071-00	NTE157	ECG157	- — - — -	SK3747
	NPN Trans.	MPSA42	110-0082-00	NTE287	ECG287	- — - — -	SK3232
	NPN Trans.	2N3904	110-0069-00	NTE123AP	ECG123AP	276-2009	- — - — -
	NPN Trans.	TIP122	110-0067-00	NTE261	ECG261	276-2068	SK3896
	NPN Trans.	MJE15030	110-0101-00	NTE375	ECG375	- — - — -	SK9118
	PNP Trans.	2N5401	110-0078-00	NTE288	ECG288	- — - — -	SK3434
	PNP Trans.	MJE15031	110-0103-00	NTE292	ECG292	- — - — -	SK3441
	PNP Trans.	MJE350	110-0072-00	NTE374	ECG374	- — - — -	SK9042
	PNP Trans.	MPSA92	110-0100-00	NTE288	ECG278	- — - — -	SK3434
	PNP Trans.	TIP42	110-0068-00	NTE332	ECG332	- — - — -	SK9236
	PNP Trans.	TIP32C	110-0081-00	NTE292	ECG292	- — - — -	SK3441
	PNP Trans.	TIP36C	110-0077-00	NTE393	ECG393	- — - — -	SK3961
	SCR Trans.	2N5060	110-0074-00	NTE5400	ECG5400	276-1067	SK3950
	SCR Trans.	SCR2800B	110-0083-00	NTE5461-8	ECG5461-8	- — - — -	- — - — -
	BRIDGE RECTIFIERS (BR)			**Comments:**			
4	BR (Present)	DB3501 or CM3501	112-5000-00	For White Star I/O Bds., BR = 35 Amp @ 100v P.I.V.			
	RELAYS			**Comments:**			
5	Relay	FRL-264 D024/02CK	190-5002-00	For PPB, Power Supply, & White Star I/O Boards, Relay = 24v DC 10 Amp DPDT			
	Relay	FRL-264 D006/04CV	190-5001-00	For CPU Boards, Relay = 6v DC 5 Amp 4 Pole DT			

APPENDIX C

Production Start Date, Manual Part Nº, ROM Size & Positions and Jumper W6 Installed Note‡ (White Star Board System & S.A.M. System Only*)

	Game Name White Star Bd. System™	Production Start Date and Manual Part Nr.	CPU/Sound Board **Sound U7 512K** CPU/Sound Board **Game U210 1MB** CPU/Sound Board **Voice ROMS:**				Jumper Installed (‡ see Note)
			U17	U21	U36	U37	
29	Apollo 13 (A13)	NOV 95 780-5044-00	4MB	4MB	4MB	Not Used	n / a
30	Golden Eye	FEB 96 780-5042-00	4MB	4MB	Not Used	Not Used	n / a
31	Twister	APR 96 780-5041-00	4MB	4MB	Not Used	Not Used	n / a
32	ID4: Independence Day	JUL 96 780-5045-00	4MB	4MB	Not Used	Not Used	n / a
33	Space Jam	OCT 96 780-5043-00	4MB	4MB	4MB	Not Used	n / a
34	The Star Wars Trilogy - Sp. Ed.	FEB 97 780-5056-00	4MB	4MB	Not Used	Not Used	n / a
35	The Lost World: Jurassic Park	JUN 97 780-5053-00	4MB	4MB	Not Used	Not Used	n / a
36	The X-Files	AUG 97 780-5046-00	4MB	4MB	Not Used	Not Used	n / a
37	Starship Troopers	NOV 97 780-5059-00	4MB	4MB	4MB	Not Used	n / a
38	Viper Night Drivin'	FEB 98 780-5035-00	4MB	4MB	4MB	4MB	n / a
39	Lost In Space	JUN 98 780-5060-00	4MB	4MB	4MB	4MB	n / a
40	Godzilla	SEP 98 780-5040-00	4MB	4MB	4MB	4MB	n / a
41	South Park	JAN 99 780-5071-00	8MB	8MB	8MB	8MB	W6
42 a	Harley-Davidson®	AUG 99 780-5067-01	8MB	8MB	8MB	8MB	W6
42 b	Harley-Davidson®2nd Ed.	SEP 02 780-5067-10	8MB	8MB	8MB	8MB	W6
42 c	Harley-Davidson® 3rd Ed.	OCT 04 780-5087-00	8MB	8MB	8MB	8MB	W6
43 a	Striker Xtreme	MAR 00 780-5068-01	8MB	8MB	8MB	8MB	W6
43 b	NFL	OCT 00 780-50**73**-00	8MB	8MB	8MB	8MB	W6
44	Sharkey's Shootout	JUL/OCT 00 780-5072-01	8MB	8MB	8MB	Not Used	W6
45	High Roller Casino	JAN 01 780-5065-00	8MB	8MB	8MB	8MB	W6
46	Austin Powers™	MAY 01 780-5074-00	8MB	8MB	8MB	8MB	W6
47	MONOPOLY®	SEP 01 780-5075-00	8MB	8MB	8MB	Not Used	W6
48	Playboy	FEB 02 780-5076-00	8MB	8MB	8MB	8MB	W6
49	RollerCoaster Tycoon™	AUG 02 780-5078-00	8MB	8MB	8MB	Not Used	W6
50	The Simpsons™ Pinball Party	JAN 03 780-5077-00	8MB	8MB	8MB	8MB	W6
51	T3®: Rise of the Machines™	MAY 03 780-5079-00	8MB	8MB	8MB	8MB	W6
52	The Lord of the Rings™	NOV 03 780-5080-00	8MB	8MB	8MB	8MB	
53	Ripley's Believe It or Not!®	APR 04 780-5081-00	8MB	8MB	8MB	8MB	

**** Note:*** *For complete Appendix Information for Games **Laser War** through **Batman Forever**, see any Service Game Manual between **Apollo 13** through **Ripley's Believe It or Not!** or on-line at our website www.sternpinball.com/parts.htm; also available on CD-R, 970-2003-00 (**The Simpsons™ Pinball Party**, **T3®** and **The Lord of the Rings™**).*

‡ *Additional Information for **Installed** Jumper (above games 41-51):*

• *Installed **W6** so 8MB ROMS can be utilized. See the **CPU/Sound Board Schematic** (Sheet 2 of 3, Address Location 3E) in the games' Service Game Manual. Games 52 - 57 CPU/Sound Board differ than <51 (See Appendix D).*

See **Apdx. A** for more detailed information on **Pinball Game Firmware** *(ROM Name, Size, Part Numbers, USA Version & Checksum and Board Locations).*

	Game Name White Star Board System™	Production Start Date and Manual Part Nr.	CPU/Sound Board **Sound U7 512K** CPU/Sound Board **Game U210 1MB** CPU/Sound Board **Voice ROMS:**			
			U17	U21	U36	U37
54	Elvis®	AUG 04 780-5084-00	8MB	8MB	8MB	8MB
55	The Sopranos℠	FEB 05 780-5085-00	8MB	8MB	8MB	8MB
56	NASCAR®	JUL 05 780-5086-00	8MB	8MB	8MB	8MB
57	Grand Prix	SEP 05 780-5091-00	8MB	8MB	8MB	8MB

See **Apdx. A** for more detailed information on **Pinball Game Firmware** *(ROM Name, Size, Part Numbers, USA Version & Checksum and Board Locations).*

	Game Name S.A.M. System	Production Start Date and Manual Part Nr.	S.A.M. System CPU/Sound Board Boot EPROM **U9** 965-BOOT-SAM *(Programmed)*			
58	World Poker Tour™ (WPT)	JUN 06 780-5088-00	8MB	B-02 V2.1+	chksum $F625	LOC: U9
59	The Simpsons™ Kooky Carnival	APR 06 780-5090-00	8MB	B-02 V2.1+	chksum $F625	LOC: U9
60	©Disney's Pirates of the Caribbean	AUG 06 780-5092-00	8MB	B-02 V2.1+	chksum $F625	LOC: U9
61	Famil Guy™	DEC 06 780-5093-00	8MB	B-02 V2.1+	chksum $F625	LOC: U9
62	Spider-Man™	MAY 07 780-5094-00	8MB	B-02 V2.1+	chksum $F625	LOC: U9

Games 58 – current, S.A.M. System : CPU/Sound & I/O Power Driver PCBs differ than White Star *(previous Games 29 – 57)*; Disp. Controller Not Required.

APPENDIX D

Board Type (White Star Board System* Only) Table

Game Name	Flipper	I/O Power Driver	CPU/Sound Stereo	Disp. Power Supply	Dot Matrix Display	Display Controller	OPTO Transmitter	OPTO Receiver	OPTO Application
Apollo 13	520-5080-00 2-Flipper	520-5137-00	520-5136-00	520-5138-00	520-5052-00 128 X 32 Dots	520-5055-01	520-5124-00 Single OPTO	520-5125-00 Single OPTO	5-Ball Trough over Up-Kicker
	Miscellaneous PC Boards:	Light Boards 520-5130-01, -04 & -05 Magnet Interface, 7-Segment Display & Light Bd. 520-5130-06 Magnet Driver Board 520-5130-02 Switch Membrane Board 520-5130-03				Relay Board 520-5010-00			
Golden Eye	520-5080-00 2-Flipper	520-5137-00	520-5136-00	520-5138-00	520-5052-00 128 X 32 Dots	520-5055-01	520-5124-00 Single OPTO	520-5125-00 Single OPTO	5-Ball Trough over Up-Kicker
	Miscellaneous PC Boards:	Light Boards 520-5128-05 through -08		Mag. Processor X2 Driver Bd. 520-5143-00		Relay Board 520-5010-00			

GAMES HEREON NO LONGER REQUIRE THE FLIPPER BOARD WITH THE WHITE STAR BOARD SYSTEM™

Game Name	I/O Power Driver	CPU/Sound Mono	Disp. Power Supply	Dot Matrix Display	Display Controller	OPTO Transmitter	OPTO Receiver	OPTO Application	Misc OPTO & App.
Twister	520-5137-01	520-5136-10	520-5138-00	520-5052-00 128 X 32 Dots	520-5055-01	520-5124-00 Single OPTO	520-5125-00 Single OPTO	5-Ball Trough over Up-Kicker	
	Miscellaneous PC Boards:	Light Boards 520-5145-01 through -07		Mag. Drv. Bd. 520-5143-00	Relay Board 520-5010-00				
Independence Day (ID4)	520-5137-01	520-5136-10	520-5138-00	520-5052-00 128 X 32 Dots	520-5055-01	520-5124-00 Single OPTO	520-5125-00 Single OPTO	4-Ball Trough over Up-Kicker	
	Miscellaneous PC Boards:	Light Boards 520-5149-01 through -10		Servo Mtr. Bd. 520-5152-00		520-5082-00 Long Hop OPTO	520-5083-00 Long Hop OPTO	Alien Head Enter	
Space Jam	520-5137-01	520-5136-10	520-5138-00	520-5052-00 128 X 32 Dots	520-5055-01	520-5124-00 Single OPTO	520-5125-00 Single OPTO	5-Ball Trough over Up-Kicker	
	Miscellaneous PC Boards:	2X 7-Segment Display Board 520-5153-00							
The Star Wars Trilolgy - Special Ed.	520-5137-01	520-5136-10	520-5138-00	520-5052-00 128 X 32 Dots	520-5055-01	520-5124-00 Single OPTO	520-5125-00 Single OPTO	4-Ball Trough over Up-Kicker	
	Miscellaneous PC Boards:	Relay Board 520-5010-00							
The Lost World: J.P.	520-5137-01	520-5136-10	520-5138-00	520-5052-00 128 X 32 Dots	520-5055-01	520-5124-00 Single OPTO	520-5125-00 Single OPTO	4-Ball Trough over Up-Kicker	520-5162-00 2-Pos. Motor Sensor on Snagger Motor
	MiscellaneousPC Boards:	DC Relay Bd. 520-5066-00	Shaker Mtr. Bd. 520-5065-00						
The X-Files	520-5137-01	520-5136-10	520-5138-00	520-5052-00 128 X 32 Dots	520-5055-01	520-5124-00 Single OPTO	520-5125-00 Single OPTO	4-Ball Trough over Up-Kicker	520-5155-00 3-Pos. Motor Sensor on File Cab. Motor
	Miscellaneous PC Boards:					520-5082-00 Long Hop OPTO	520-5083-00 Long Hop OPTO	File Cabinet Enter	
Starship Troopers	520-5137-01	520-5136-15	520-5138-00	520-5052-00 128 X 32 Dots	520-5055-02	520-5124-00 Single OPTO	520-5125-00 Single OPTO	4-Ball Trough over Up-Kicker	
	Miscellaneous PC Boards:	4X 7-Segment Display Board 520-5166-00				520-5082-00 Long Hop OPTO	520-5083-01 Long Hop OPTO	L/R Orbit Lane Enter	
Viper Night Drivin'	520-5137-01	520-5136-16	520-5138-00	520-5052-00 128 X 32 Dots	520-5055-03	520-5124-00 Single OPTO	520-5125-00 Single OPTO	4-Ball Trough over Up-Kicker	
	Miscellaneous PC Boards:	Relay Board 520-5010-00				520-5082-00 Long Hop OPTO	520-5083-01 Long Hop OPTO	Jump Ramp	
Lost In Space	520-5137-01	520-5136-16	520-5138-00	520-5052-00 128 X 32 Dots	520-5055-03	515-0173-00 Dual OPTO	515-0174-00 Dual OPTO	4-Ball Trough over Up-Kicker	
	Miscellaneous PC Boards:	Relay Board 520-5010-00							
Godzilla	520-5137-01	520-5136-16	520-5138-00	520-5052-00 128 X 32 Dots	520-5055-03	515-0173-00 Dual OPTO	515-0174-00 Dual OPTO	4-Ball Trough over Up-Kicker	
	Miscellaneous PC Boards:	Shaker Mtr. Bd. 520-5065-00							
South Park	520-5137-01	520-5136-16	520-5138-00	520-5052-00 128 X 32 Dots	520-5055-03	515-0173-00 Dual OPTO	515-0174-00 Dual OPTO	5-Ball Trough over Up-Kicker	
	Miscellaneous PC Boards:					520-5082-00 Long Hop OPTO	520-5083-01 Long Hop OPTO	Kenny Under Trough Enter	
Harley-Davidson® 1st-3rd* Editions	520-5137-01	520-5136-16 *520-5300-00*	520-5138-00	520-5052-00 128 X 32 Dots	520-5055-03	515-0173-00 Dual OPTO	515-0174-00 Dual OPTO	4-Ball Trough over Up-Kicker	
	Miscellaneous PC Boards:	Relay Board 520-5010-00	Shaker Mtr. Bd. 520-5065-00	Diode Board 520-5146-00		520-5082-00 Long Hop OPTO	520-5083-01 Long Hop OPTO	Motorcycle Enter	
Striker Xtreme (NFL)	520-5137-01	520-5136-16	520-5138-00	520-5052-00 128 X 32 Dots	520-5055-03	515-0173-00 Dual OPTO	515-0174-00 Dual OPTO	4-Ball Trough over Up-Kicker	520-5155-00 3-Pos. Motor Sensor on Goalie Motor
	Miscellaneous PC Boards:	DC Relay Bd. 520-5066-00	Relay Board 520-5010-00	Diode Board 520-5146-00	for UK ONLY> Solenoid Expander Bd. 520-5192-00	520-5082-00 Long Hop OPTO	520-5083-01 Long Hop OPTO	Goalie Under-Trough Enter	
Sharkey's Shootout	520-5137-64	520-5136-64	520-5138-00	520-5052-00 128 X 32 Dots	520-5055-03	515-0173-00 Dual OPTO	515-0174-00 Dual OPTO	4-Ball Trough over Up-Kicker	520-5194-00 4-Pos. Motor Sensor on ?-Ball Motor
	MiscellaneousPC Boards:	Relay Board 520-5010-00	Sol. Exp. Bd. 520-5192-00						
High Roller Casino	520-5137-01	520-5136-16	520-5138-00	520-5052-00 128 X 32 Dots	520-5055-03	515-0173-00 Dual OPTO	515-0174-00 Dual OPTO	4-Ball Trough over Up-Kicker	520-5194-00 4-Pos. Motor Sensor on Roulette Wheel Motor
						520-5082-00 Long Hop OPTO	520-5083-01 Long Hop OPTO	Ball Lock under Roulette	
	Miscellaneous PC Boards:	Dot Display (5X7) in Slot Mach. 520-5197-00			for UK ONLY> Solenoid Expander Bd. 520-5192-00	520-5196-00 3-Pos. OPTO	520-5195-00 3-Pos. OPTO	Up/Dn Ramp in Slot Mach.	
Austin Powers™	520-5137-01	520-5136-16	520-5138-00	520-5052-00 128 X 32 Dots	520-5055-03	515-0173-00 Dual OPTO	515-0174-00 Dual OPTO	4-Ball Trough over Up-Kicker	520-5212-00 Pulse-Stretcher OPTO on Spini-Me
	MiscellaneousPC Boards:	Relay Bd. (X3) 520-5010-00			for UK ONLY> Solenoid Expander Bd. 520-5192-00	520-5082-00 Long Hop OPTO	520-5083-01 Long Hop OPTO	Time Machine Ramp	
MONOPOLY®	520-5137-01	520-5136-16	520-5138-00	520-5052-00 128 X 32 Dots	520-5055-03	515-0173-00 Dual OPTO	515-0174-00 Dual OPTO	4-Ball Trough over Up-Kicker	
	MiscellaneousPC Boards:	DC Relay Bd. 520-5066-00	Mini-Dot Display (3 by 5X7) 520-5197-00 (Electric C° Sign)		for UK ONLY> Solenoid Expander Bd. 520-5192-00	520-5218-00 4-Pos. OPTO	520-5210-00 4-Pos. OPTO	Bank Door	

Table continued on the next page.

APPENDIX D

Board Type (White Star Board System* & S.A.M. System** Only) Table

Game Name	I/O Power Driver	CPU/Sound (old & new)	Disp. Power Supply	Dot Matrix Display	Display Controller	OPTO Transmitter	OPTO Receiver	OPTO Application	Misc OPTO & App.
Playboy	520-5137-01	520-5136-16	520-5138-00	520-5052-00 128 X 32 Dots	520-5055-03	515-0173-00 Dual OPTO	515-0174-00 Dual OPTO	4-Ball Trough over Up-Kicker	
	Miscellaneous PC Boards:	DC Relay Bd. 520-5066-00	Relay Bd. 520-5010-00		for UK ONLY> Solenoid Expander Bd. 520-5192-00				
RollerCoaster Tycoon™	520-5137-01	520-5136-16	520-5138-00	520-5052-00 128 X 32 Dots	520-5055-03	515-0173-00 Dual OPTO	515-0174-00 Dual OPTO	4-Ball Trough over Up-Kicker	520-5222-00 1-Position Switch Detect on Wheel Spin
	Miscellaneous PC Boards:	DC Relay Bd. 520-5066-00	Mini-Dot Display (3 by 5X7) 520-5221-00 (Ramp Enter Sign)		for UK ONLY> Solenoid Expander Bd. 520-5192-00	520-5082-00 Long Hop OPTO	520-5083-01 Long Hop OPTO	Behind 1-Bank Drop Target	
The Simpsons™ Pinball Party	520-5137-01	520-5136-16	520-5138-00	520-5052-00 128 X 32 Dots	520-5055-03	515-0173-00 Dual OPTO	515-0174-00 Dual OPTO	4-Ball Trough over Up-Kicker	
	Miscellaneous PC Boards:	LED Bd. 520-5219-00	Color Dot Display (4 by 5X7) 520-5225-00 (TV Set)		for UK ONLY ◀◀◀ Aux. Driver Bd. 520-5068-01				
Terminator® 3: Rise of the Machines™	520-5137-01	**520-5136-16**	520-5138-00	520-5052-00 128 X 32 Dots	520-5055-03	515-0173-00 Dual OPTO	515-0174-00 Dual OPTO	4-Ball Trough over Up-Kicker	
	Miscellaneous PC Boards:				for UK ONLY ◀◀◀ Aux. Driver Bd. 520-5068-01	515-7307-00 Single OPTO	515-7308-00 Single OPTO	TXCannon Trough	
The Lord of the Rings™	520-5137-01	***New* 520-5300-00**	520-5138-00	520-5052-00 128 X 32 Dots	520-5055-03	515-0173-00 Dual OPTO	515-0174-00 Dual OPTO	4-Ball Trough over Up-Kicker	500-6746-00 (White Trans.) 500-6747-00 (Black Rec.)
	Miscellaneous PC Boards:	19-LED PCB 520-5242-00	OPTO Transmitter / Receiver Amplifier PCB 520-5239-00		for UK ONLY ◀◀◀ Aux. Driver Bd. 520-5068-01	515-7307-00 Single OPTO	515-7308-00 Single OPTO	Orthanc Tower Trough	
Ripley's Believe It or Not!®	520-5137-01	520-5300-00	520-5138-00	520-5052-00 128 X 32 Dots	520-5055-03	515-0173-00 Dual OPTO	515-0174-00 Dual OPTO	4-Ball Trough over Up-Kicker	500-6775-00 OPTO Trnscvr
	Miscellaneous PC Boards:	520-5236-00 X3 Dot Display	OPTO Transmitter / Receiver Amplifier PCB 520-5239-01		for UK ONLY ◀◀◀ Aux. Driver Bd. 520-5068-01	520-5234-00 3-Pos. OPTO	520-5234-00 3-Pos. OPTO	Vari-Target	520-5235-03 X3 Aux. Drvr
Elvis®	520-5137-01	520-5300-00	520-5138-00	520-5052-00 128 X 32 Dots	520-5055-03	515-0173-00 Dual OPTO	515-0174-00 Dual OPTO	4-Ball Trough over Up-Kicker	
	Miscellaneous PC Boards:				for UK ONLY ◀◀◀ Aux. Driver Bd. 520-5068-01				
The Sopranos℠	520-5137-01	520-5300-00	520-5138-00	520-5052-00 128 X 32 Dots	520-5055-03	515-0173-00 Dual OPTO	515-0174-00 Dual OPTO	4-Ball Trough over Up-Kicker	
	Miscellaneous PC Boards:				for UK ONLY ◀◀◀ Aux. Driver Bd. 520-5068-01				
NASCAR® and [NDSE]	520-5137-01	520-5300-00	520-5138-00	520-5052-00 128 X 32 Dots	520-5055-03	515-0173-00 Dual OPTO	515-0174-00 Dual OPTO	4-Ball Trough over Up-Kicker	500-6775-00 OPTO Trans. (Qty. 16) Switch Detect.
	Miscellaneous PC Boards:	520-5235-03 X3 Aux. Drvr	OPTO Transmitter / Receiver Amplifier PCB 520-5239-01		for UK ONLY ◀◀◀ Aux. Driver Bd. 520-5068-01				
Grand Prix	520-5137-01	520-5300-00	520-5138-00	520-5052-00 128 X 32 Dots	520-5055-03	515-0173-00 Dual OPTO	515-0174-00 Dual OPTO	4-Ball Trough over Up-Kicker	500-6775-00 OPTO Trans. (Qty. 16) Switch Detect.
	Miscellaneous PC Boards:	520-5235-03 X3 Aux. Drvr	OPTO Transmitter / Receiver Amplifier PCB 520-5239-01		for UK ONLY ◀◀◀ Aux. Driver Bd. 520-5068-01				

Game Name	I/O Power Driver**	CPU / Sound**	Disp. Power Supply	Dot Matrix Display	Dual OPTO Transmitter	Dual OPTO Receiver	Dual OPTO Transceiver	OPTO Transceiver Miscellaneous
World Poker Tour™ (WPT)	**520-5249-00** Backbox	**520-5246-00** Backbox	520-5138-00 Backbox	520-5052-00 128 X 32 Dots	515-0173-00 4-Ball Trough	515-0174-00 4-Ball Trough	500-6775-00 4 Switch Pairs (Qty. 8)	520-5251-00 'U' 1/per PCB Jail Bars Up Ace/Hole Mech
	Miscellaneous **PCBs :**	520-5254-00 50V Step-Up Drv	520-5250-14 14LED 5X7 Disp.	520-5239-01 OPTO Amplifier	520-5247-00 Ace/Hole Mech	520-5248-00 Ace/Hole Mech		520-5252-04 'U' 4/per PCB Drop Targets 4- & 8- Banks
The Simpsons™ Kooky Carnival	**520-5249-00** Back Door	**520-5246-00** Back Door	520-5138-00 Cabinet Rear	520-5052-00 128 X 32 Dots			**520-5253-00-ASY** Coin Drop (Qty. 11)	
	Miscellaneous **PCBs :**	515-5742-00 Shaker PCB	500-6700-00 Relay *(incl. Wiring + Conn.)*					
©Disney's Pirates of the Caribbean	**520-5249-00** Backbox	**520-5246-00** Backbox	520-5138-00 Backbox	520-5052-00 128 X 32 Dots	515-0173-00 4-Ball Trough	515-0174-00 4-Ball Trough	500-6775-00 5 Switch Pairs (Qty. 10)	
	Miscellaneous **PCBs :**	520-5239-01 OPTO Amp. (X3)	511-5024-03 Relay *(incl. Wiring + Conn.)*					
		520-5238-00 : H-E-A-R-T LED PCB						
Family Guy™	**520-5249-00** Backbox	**520-5246-00** Backbox	520-5138-00 Backbox	520-5052-00 128 X 32 Dots	515-0173-00 4-Ball Trough	515-0174-00 4-Ball Trough	500-6775-00 3 Switch Pairs (Qty. 6)	520-5252-01 'U' 1/per PCB Drop Target 1-Bank
	Miscellaneous **PCBs :**	520-5239-01 OPTO Amp. (X2)	520-5261-00 Stepper Motor	511-5042-01 Trgt. Sensor (X2)			500-6775-01 1 Switch Pair (Qty. 2)	520-5252-04 'U' 4/per PCB Drop Target 4-Bank
		511-5046-00 : Mini Playfield Lamp PCB						
Spider-Man™	**520-5249-00** Backbox	**520-5246-00** Backbox	520-5138-00 Backbox	520-5052-00 128 X 32 Dots	515-0173-00 4-Ball Trough	515-0174-00 4-Ball Trough	500-6775-00 3 Switch Pairs (Qty. 6)	
	Miscellaneous **PCBs :**	520-5239-01 OPTO Amp. (X2)						

APPENDIX D

Board Type Table

Game Name	Flipper	Sound	Power Supply	Display X-Digit
• Laser War	2-Flipper **Board Not Required**	***initial:*** 520-5002-00 ***replaced with:*** 520-5002-02 *520-5002-01 was not used.*	520-5000-00	Master: 520-5004-00 plus: 520-5005-00 (Qty. 2): 7 Digit Alpha/Numeric 520-5006-00 (Qty. 2): 7 Digit Numeric 520-5007-00 (Qty. 1): 4 Digit Numeric
• Secret Service • Torpedo Alley	3-Flipper **Board Not Required**	520-5002-02		520-5014-01 7 Digit Alpha/Numeric Combined
• Time Machine	2-Flipper **Board Not Required**			
• Playboy 35th Anniversary *	520-5033-00 2-Flipper *(*only for 100 games of Playboy 35th Anniv. & ABC Mon. Night Football)*			520-5030-00 16 Digit Alpha/Numeric Combined
• ABC Monday Night Football * • *Robocop* • *Phantom of the Opera* • *Back to the Future*				
• The Simpsons		520-5002-**03**		

Game Name	Flipper	Sound	Power Supply	Dot Matrix Display	Display Controller	OPTO Transmitter	OPTO Receiver	OPTO Apllication
• Checkpoint • Teenage Mutant Ninja Turtles	520-5033-00 2-Flipper	520-5002-03	520-5047-00	520-5042-00 128 X 16				
• Batman • Star Trek 25th Anniv. • Hook		520-5050-01						
• Lethal Weapon 3			520-5047-01	520-5052-00 128 X 32	520-5055-00			
• Star Wars • Rocky & Bull-winkle & Friends		520-5050-02						
• Jurassic Park	520-5076-00 3-Flipper		520-5047-02					
• Last Action Hero	520-5070-00 2-Flipper	520-5050-03						
• Tales from the Crypt	520-5076-00 3-Flipper				520-5055-01			
• The Who's Tommy		520-5077-00						
• WWF Royal Rumble	**520-5070 / 5080 -00** 4-Flipper (2X2)							
• Guns N' Roses	520-5076-00 3-Flipper							
• Maverick		520-5050-03	520-5047-03	520-5075-00 192 X 64	520-5092-01	520-5102-00 Single OPTO	520-5103-00 Single OPTO	Paddle Boat Wheel Enter
• Mary Shelley's Frankenstein	520-5076-00 3-Flipper	520-5077-00						
• Baywatch	**520-5070 / 5080 -00** 4-Flipper (2X2)	520-5126-02				520-5124-00 Single OPTO	520-5125-00 Single OPTO	5-Ball Trough over Up-Kicker
• Batman Forever	520-5076-00 3-Flipper					520-5124-00 Single OPTO	520-5125-00 Single OPTO	4-Ball Trough over Up-Kicker

Miscellaneous Boards (Lamp Boards & Relay Boards) not listed above can be found in each individual game manual.

APPENDIX E

Flipper Coil (White Star Board System* & S.A.M. System** Only) Table

Typical Coil Diode 1N4004 unless noted otherwise (Diode Top = above lugs next to windings; Diode Below (Bottom) = under lugs opposite of windings).

STANDARD COILS (TYPICAL APPLICATIONS)			
Ga.-Turn	**Res (Ω)**	**SPI Part Number and Comments**	
20-400	1.0 Ω	090-5021-*use* :	**-00** Diode Top
22-500	1.7 Ω	090-5017-*use* :	-00 Diode Top
22-600	2.2 Ω	090-5017-*use* :	-0B Diode Below // **-0T** Diode Top
23-700	3.1 Ω	090-5022-*use* :	-0B Diode Below // **-0T** Diode Top
23-750	3.4 Ω	090-5019-*use* :	-00 Diode Top
23-800	3.6 Ω	090-5001-*use* :	-0B Diode Below // **-0T** Diode Top // **-NL** No Lugs 11" Leads // **-ND** No Diode
23-840	4.0 Ω	090-5005-*use* :	-00 Diode Top
23.5-765	3.6 Ω	090-5037-*use* :	-03 Diode Top
24-900	5.0 Ω	090-5002-*use* :	-02 Diode Top // **-10** No Lugs 14" Leads
24-940	5.5 Ω	090-5036-*use* :	-0B Diode Below // **-0T** Diode Top *use* **090-5051-01** No Lugs 11" Leads
25-1240	9.3 Ω	090-5034-*use* :	-00 Diode Below
26-1200	10.3 Ω	090-5044-*use* :	-0B Diode Below // **-0T** Diode Top // **-NL** No Lugs 11" Leads // **-ND** No Diode
27-1300	14.2 Ω	090-5003-*use* :	-0T Diode Top
27-1400	14.7 Ω	090-5015-*use* :	-00 Diode Below
27-1400		**511-5031-00**	*Special App.: No Diode / Lugs + Conn.*
27-1500	16.3 Ω	090-5004-*use* :	-0B Diode Below // **-0T** Diode Top
29-2000	33.6 Ω	090-5016-*use* :	-00 Diode Top
LARGE, MEDIUM & MINI COILS (MAGNET APPLICATIONS)			
20.5-480	2.9 Ω	090-5064-*use* :	-02 No Lugs *or* Core; 14" Leads // Large
22-650	4.3 Ω	090-5042-*use* :	-00 No Lugs *or* Core; 6" Leads // Large **-01** No Lugs *or* Core; 12" Leads // Large
24-780	8.0 Ω	090-5061-*use* :	-00 No Lugs *or* Core; 6" Lds. // Medium
29-1000	15.2 Ω	090-5059-*use* :	-00 Lugs + Diode + Magnet Core // Mini
31-1500	52.0 Ω	090-5054-00 : 090-5055-00 :	Straight Lugs + Diode + Mag Core // Mini 90° Lugs + Diode + Magnet Core // Mini

LARGE COILS (FLIPPERS & SPECIAL APPLICATIONS)			
Ga.-Turn	**Res (Ω)**	**SPI Part Number and Comments**	
21-900	*call* Ω	090-5020-*use* :	**-01** 3-Lugs + 1N4004 & 1N5404 Diodes **-10** Diode Top <BROWN><RED>
22-750 / 30-2600	2.6 Ω 92.0 Ω	090-5011-*use* :	**-00 DUAL WND COIL** // 3-Lugs Diode x2
22-900	3.45 Ω	090-5020-*use* :	-20T Diode Top <YELLOW> // **-20-ND** No Diode
22-1080	4.2 Ω	090-5032-*use* :	-0B D. Below // **-0T** D. Top <YEL-GRN> **-NL** No Diode
23-620 / 30-2600	2.4 Ω 75.0 Ω	090-5006-*use* :	-00 **DUAL WND COIL** // 3-Lugs Diode x2
23-700 / 30-2600	3.0 Ω 83.5 Ω	090-5013-*use* :	-00 **DUAL WOUND COIL** // Diode Top
23-800 / 30-2600	2.4 Ω 90.5 Ω	090-5012-*use* :	-00 **DUAL WOUND COIL** // Diode Top
23-900	4.05 Ω	090-5020-*use* :	-30 Diode Top <GREEN>
23-1100	5.1 Ω	090-5030-*use* :	-0T Diode Top <ORANGE> **-ND** No Diode
23-1200	7.1 Ω	090-5008-*use* :	-00 Diode Top <BLACK>
23-1500	4.4 Ω	090-5062-*use* :	-00 Diode Top <BLUE>
24-1570	9.5 Ω	090-5025-*use* :	-00 Diode Top <BLUE>
25-1400	*call* Ω	090-5067-*use* :	-0T Diode Top <RED>
25-1600	*call* Ω	090-5068-*use* :	-0T Diode Top <WHITE>
25-1800	13.8 Ω	090-5041-*use* :	-0T Diode Top <BLUE-GREEN>
MINI COILS (RESET / TRIP APPLICATIONS)			
27-950	*call* Ω	090-5046-*use* :	-01 Diode Top
28-1050	11.5 Ω	090-5046-*use* :	-00 Diode Top
27-880	*call* Ω	500-6976-01	No Lugs *or* Diode + 6" Leads & Conn.
31-590	*call* Ω	090-5010-*use* :	-00 Diode Top
32-1250	35.0 Ω	**515-6916-01 :**	*includes Flap & Screw* <YELLOW>
32-1800	50.2 Ω	090-5031-*use* : (515-6110-00)	-0B Diode Below // **-0T** Diode Top *use 515-# to include mounting & armature brackets*
33-1590	59.0 Ω	**515-6916-00 :**	*includes brackets* <WHITE>

Please Note: *Ohm values may vary **+ / – .03** depending on meter calibration.*

Ordering Note: *Coils typically should not come with Coil Sleeves.* ***IF A SLEEVE EXISTS****, ensure it is the correct sleeve for the application usage. For the correct Coil Sleeve, refer to the Game Assembly Drawing the coil exists on and order separately.*

Flipper Coil (White Star Board System* Only) Table

GAME NAME	Nº of Flippers	FLIPPERS SPI Nº / GAUGE-TURNS / Color		FLIPPERS no E.O.S. Switch SPI Nº / GAUGE-TURNS / Color	
		LOWER LEFT	LOWER RIGHT	UPPER LEFT	UPPER RIGHT
**** Note:*** *For complete Appendix Information for Games **Laser War** through **Batman Forever**, see any Service Game Manual between **Apollo 13** through **Ripley's Believe It or Not!**; or order CD-R, 970-2003-00 (**The Simpsons™ Pinball Party, Terminator® 3** and **The Lord of the Rings™**).*					
Apollo 13	2	090-5032-0T **22-1080 -YEL-GRN-**	SAME	Not Used	Not Used
Golden Eye	2	090-5032-0T **22-1080 -YEL-GRN-**	SAME	Not Used	Not Used
Twister	2	090-5020-20T **22-900 -YELLOW-**	090-5032-0T **22-1080 -YEL-GRN-**	Not Used	Not Used
ID4: Independence Day	3	090-5032-0T **22-1080 -YEL-GRN-**	SAME	Not Used	090-5020-30 **23-900 -GREEN-**
Space Jam †	2	090-5032-0T **22-1080 -YEL-GRN-**	090-5020-20T **22-900 -YELLOW-**	Not Used	Not Used
The Star Wars Trilogy - Special Edition †	2	090-5032-0T **22-1080 -YEL-GRN-**	SAME	Not Used	Not Used
The Lost World: Jurassic Park †	2	090-5032-0T **22-1080 -YEL-GRN-**	SAME	Not Used	Not Used
The X-Files †	2	090-5032-0T **22-1080 -YEL-GRN-**	SAME	Not Used	Not Used
Starship Troopers †	3	090-5030-0T **23-1100 -ORANGE-**	SAME	Not Used	090-5032-0T **22-1080 -YEL-GRN-**
Viper Night Drivin' †	2	090-5030-0T **23-1100 -ORANGE-**	SAME	Not Used	Not Used
Lost In Space †	2	090-5030-0T **23-1100 -ORANGE-**	090-5032-0T **22-1080 -YEL-GRN-**	Not Used	Not Used
Godzilla †	2	090-5032-0T **22-1080 -YEL-GRN-**	SAME	Not Used	Not Used
South Park †	2	090-5030-0T **23-1100 -ORANGE-**	SAME	Not Used	Not Used

† Coil Part Numbers ending with a "**T**" signifies the Diode is on the top of the lug *(on the coil-winding side)*;
Coil Part Numbers ending with a "**B**" signifies the Diode is on the bottom of the lugs.

Table continued on the next page.

APPENDIX E

Flipper Coil (White Star Board System* & S.A.M. System** Only) Table

GAME NAME	№ of Flippers	FLIPPERS w/E.O.S. Switch		FLIPPERS no E.O.S. Switch	
		SPI № / GAUGE-TURNS / Color		SPI № / GAUGE-TURNS / Color	
		LOWER LEFT	LOWER RIGHT	UPPER LEFT	UPPER RIGHT
Harley-Davidson® † *and 1st through 3rd Editions*	2	090-5032-0T **22-1080 -YEL-GRN-**	090-5030-0T **23-1100 -ORANGE-**	Not Used	Not Used
Striker Xtreme (NFL) †	3	090-5032-0T **22-1080 -YEL-GRN-**	090-5030-0T **23-1100 -ORANGE-**	090-5030-0T **23-1100 -ORANGE-**	Not Used
Sharkey's Shootout †	3	090-5030-0T **23-1100 -ORANGE-**	SAME	090-5030-0T **23-1100 -ORANGE-**	Not Used
High Roller Casino †	2	090-5020-20T **22-900 -YELLOW-**	090-5032-0T **22-1080 -YEL-GRN-**	Not Used	Not Used
Austin Powers™ †	2	090-5020-30 **23-900 -GREEN-**	090-5030-0T **23-1100 -ORANGE-**	Not Used	Not Used
MONOPOLY® †	3	090-5032-0T **22-1080 -YEL-GRN-**	SAME	Not Used	090-5062-0T **23-1500 -BLUE-**
Playboy †	2	090-5030-0T **23-1100 -ORANGE-**	SAME	Not Used	Not Used
RollerCoaster Tycoon™ †	4	090-5032-0T **22-1080 -YEL-GRN-**	SAME	090-5067-0T **25-1400 -RED-**	090-5068-0T **25-1600 -WHITE-**
The Simpsons™ Pinball Party †	6** (5 with Flipper Bats)	090-5032-0T **22-1080 -YEL-GRN-**	SAME	Not Used	090-5030-0T **23-1100 -ORANGE-**
		** *The Homer Head Assembly is affixed to an Upr. Rt. Style Flipper (no E.O.S. Switch):*		Flippers (Mini-Bats) on 2nd Level Playfield:	
			** 090-5020-20T **22-900 -YELLOW-**	090-5041-00T **25-1800 -BLU-GRN-**	090-5025-00 **24-1570 -BLUE-**
Terminator® 3: Rise of the Machines™ †	2	090-5032-0T **22-1080 -YEL-GRN-**	SAME	Not Used	Not Used
The Lord of the Rings™ †	2	090-5020-20T **22-900 -YELLOW-**	SAME	Not Used	Not Used
Ripley's Believe It or Not!® †	3	090-5032-0T **22-1080 -YEL-GRN-**	SAME	Not Used	090-5067-00T **25-1400 -RED-**
Elvis® †	4	090-5020-20T **22-900 -YELLOW-**	SAME	090-5020-30 **23-900 -GREEN-**	SAME
The Sopranos℠ †	2	090-5032-0T **22-1080 -YEL-GRN-**	SAME	Not Used	Not Used
NASCAR® and [NDSE] †	2	090-5030-0T **23-1100 -ORANGE-**	SAME	Not Used	Not Used
Grand Prix †	2	090-5030-0T **23-1100 -ORANGE-**	SAME	Not Used	Not Used

† Coil Part Numbers ending with a "**T**" signifies the Diode is on the top of the lug *(on the coil-winding side)*; Coil Part Numbers ending with a "**B**" signifies the Diode is on the bottom of the lugs.

** S.A.M. System Games **DO NOT REQUIRE DIODES**. If you use a coil from your stock which has a diode, remove it **ONLY FOR** S.A.M. System Games.

World Poker Tour™ (WPT)**	4	090-5032-ND **22-1080 [NO DIODE]**	SAME	090-5030-ND **23-1100 [NO DIODE]**	SAME
©Disney's Pirates of the Caribbean**	2	090-5030-ND **23-1100 [NO DIODE]**	SAME	Not Used	Not Used
Family Guy™ **	3 Norm.	090-5030-ND **23-1100 [NO DIODE]**	SAME	090-5062-ND **23-1500 [NO DIODE]**	Not Used
	2 Mini	090-5046-01-ND **27-950 [NO DIODE]**	SAME		
Spider-Man™ **	3	090-5032-ND **22-1080 [NO DIODE]**	SAME	Not Used	090-5032-ND **22-1080 [NO DIODE]**

APPENDIX E

Generic Coil Cross-Reference Guide † ‡

Flipper Coil Table ‡ ††

GAME NAME	Nº of Flippers	FLIPPERS w/E.O.S. Switch SPI Nº / GAUGE-TURNS / Color		FLIPPERS no E.O.S. Switch SPI Nº / GAUGE-TURNS / Color	
		LOWER LEFT	LOWER RIGHT	UPPER LEFT	UPPER RIGHT
Laser War ‡	2	090-5011-00 **22-750 / 30-2600**	SAME	Not Used	Not Used
Secret Service ‡	3	090-5006-00 **23-620 / 30-2600**	SAME	Not Used	090-5006-00 **23-620 / 30-2600**
Torpedo Alley ‡	3	090-5011-00 **22-750 / 30-2600**	090-5013-00 **23-700 / 30-2600**	Not Used	090-5012-00 **23-800 / 30-2600**
Time Machine ‡	2	090-5011-00 **22-750 / 30-2600**	SAME	Not Used	Not Used
‡ These coils are dual-wound.					
Playboy 35th Anniversary ††	2	090-5020-02 **22-900 -YEL-YEL-**	SAME	Not Used	Not Used
ABC Monday Night Football ††	2	090-5020-02 **22-900 -YEL-YEL-**	SAME	Not Used	Not Used
†† A very small % of these games used a 090-5020-20 coil which used a proto-type Solid State Flipper System. The two types of coils both are 22-900 coils; the only difference is the addition of the 1N5404 Diode on the (-02) coils which was used in the Deger Design.					
Robocop	2	090-5020-20 **22-900 -YEL-YEL-**	SAME	Not Used	Not Used
Phantom of the Opera	2	090-5020-20 **22-900 -YEL-YEL-**	SAME	Not Used	Not Used
Back to the Future	2	090-5020-20 **22-900 -YEL-YEL-**	SAME	Not Used	Not Used
The Simpsons	2	090-5020-20 **22-900 -YEL-YEL-**	SAME	Not Used	Not Used
Checkpoint	2	090-5020-20 **22-900 -YEL-YEL-**	SAME	Not Used	Not Used
Teenage Mutant Ninja Turtles	2	090-5020-30 **23-900 -GRN-GRN-**	SAME	Not Used	Not Used
Batman	2	090-5020-30 **23-900 -GRN-GRN-**	SAME	Not Used	Not Used
Star Trek 25th Anniversary	2	090-5020-30 **23-900 -GRN-GRN-**	SAME	Not Used	Not Used
Hook	2	090-5030-00 **23-1100 -ORG-ORG-**	090-5020-30 **23-900 -GRN-GRN-**	Not Used	Not Used
Lethal Weapon 3	2	090-5030-00 **23-1100 -ORG-ORG-**	SAME	Not Used	Not Used
Star Wars	2	090-5032-00 **22-1080 -YEL-GRN-**	SAME	Not Used	Not Used
Rocky & Bullwinkle & Friends	2	090-5020-30 **23-900 -GRN-GRN-**	SAME	Not Used	Not Used
Jurassic Park	3	090-5020-30 **23-900 -GRN-GRN-**	SAME	Not Used	090-5030-00 **23-1100 -ORG-ORG-**

Table continued on the next page.

APPENDIX E

Flipper Coil Table †

GAME NAME	Nº of Flippers	FLIPPERS w/E.O.S. Switch		FLIPPERS no E.O.S. Switch	
		SPI Nº / GAUGE-TURNS / Color		SPI Nº / GAUGE-TURNS / Color	
		LOWER LEFT	LOWER RIGHT	UPPER LEFT	UPPER RIGHT
Last Action Hero	2	090-5020-30 **23-900 -GRN-GRN-**	SAME	Not Used	Not Used
Tales from the Crypt	3	090-5032-00 **22-1080 -YEL-GRN-**	SAME	Not Used	090-5041-00 **25-1800 -BLU-GRN-**
The Who's Tommy	3	090-5020-30 **23-900 -GRN-GRN-**	SAME	090-5041-00 **25-1800 -BLU-GRN-**	Not Used
WWF Royal Rumble	4	090-5032-00 **22-1080 -YEL-GRN-**	SAME	090-5041-00 **25-1800 -BLU-GRN-**	SAME
Guns N' Roses	3	090-5032-00 **22-1080 -YEL-GRN-**	SAME	090-5030-00 **23-1100 -ORG-ORG-**	Not Used
Maverick	3	090-5032-00 **22-1080 -YEL-GRN**	SAME	Not Used	090-5032-00 **22-1080 -YEL-GRN-**
Mary Shelley's Frankenstein	3	090-5030-00 **23-1100 -ORG-ORG-**	SAME	Not Used	090-5030-00 **23-1100 -ORG-ORG-**
Baywatch	4	090-5030-00 **23-1100 -ORG-ORG-**	090-5020-30 **23-900 -GRN-GRN-**	090-5025-00 **24-1570 -See Note-**	090-5030-00 **23-1100 -ORG-ORG-**
Batman Forever	3	090-5032-00 **22-1080 -YEL-GRN-**	090-5020-20 **22-900 -YEL-YEL-**	Not Used	090-5020-30 **23-900 -GRN-GRN-**
Apollo 13	2	090-5032-00 **22-1080 -YEL-GRN-**	SAME	Not Used	Not Used
Golden Eye	2	090-5032-00 **22-1080 -YEL-GRN-**	SAME	Not Used	Not Used
Twister	2	090-5020-20 **22-900 -YEL-YEL-**	090-5032-00 **22-1080 -YEL-GRN-**	Not Used	Not Used
ID4: Independence Day	3	090-5032-00 **22-1080 -YEL-GRN-**	SAME	Not Used	090-5020-30 **23-900 -GRN-GRN-**
Space Jam †	2	090-5032-00T **22-1080 -YEL-GRN-**	090-5020-20T **22-900 -YEL-YEL-**	Not Used	Not Used
The Star Wars Trilogy - Special Edition †	2	090-5032-00T **22-1080 -YEL-GRN-**	SAME	Not Used	Not Used
The Lost World: Jurassic Park †	2	090-5032-00T **22-1080 -YEL-GRN-**	SAME	Not Used	Not Used
The X-Files †	2	090-5032-00T **22-1080 -YEL-GRN-**	SAME	Not Used	Not Used
Starship Troopers †	3	090-5030-00T **23-1100 -ORG-ORG-**	SAME	Not Used	090-5032-00T **22-1080 -YEL-GRN-**
Viper Night Drivin' †	2	090-5030-00T **23-1100 -ORG-ORG-**	SAME	Not Used	Not Used
Lost In Space †	2	090-5030-00T **23-1100 -ORG-ORG-**	090-5032-00T **22-1080 -YEL-GRN-**	Not Used	Not Used
Godzilla †	2	090-5032-00T **22-1080 -YEL-GRN-**	SAME	Not Used	Not Used
South Park †	2	090-5030-00T **23-1100 -ORG-ORG-**	SAME	Not Used	Not Used
Harley-Davidson® † *and* Harley-Davidson® 2nd Ed. †	2	090-5032-00T **22-1080 -YEL-GRN-**	090-5030-00T **23-1100 -ORG-ORG-**	Not Used	Not Used
Striker Xtreme (NFL) †	3	090-5032-00T **22-1080 -YEL-GRN-**	090-5030-00T **23-1100 -ORG-ORG-**	090-5030-00T **23-1100 -ORG-ORG-**	Not Used
Sharkey's Shootout †	3	090-5030-00T **23-1100 -ORG-ORG-**	SAME	090-5030-00T **23-1100 -ORG-ORG-**	Not Used
High Roller Casino †	2	090-5020-20T **22-900 -YEL-YEL-**	090-5032-00T **23-1080 -YEL-GRN-**	Not Used	Not Used
Austin Powers™ †	2	090-5020-30 **23-900 -GRN-GRN-**	090-5030-00T **23-1100 -ORG-ORG-**	Not Used	Not Used
MONOPOLY® †	3	090-5032-00T **22-1080 -YEL-GRN-**	SAME	Not Used	090-5062-00T **23-1500 -BLU-BLU-**
Playboy †	2	090-5030-00T **23-1100 -ORG-ORG-**	SAME	Not Used	Not Used
RollerCoaster Tycoon™ †	4	090-5032-00T **22-1080 -YEL-GRN-**	SAME	090-5067-00T **25-1400 -RED-RED-**	090-5068-00T **25-1600 -WHT-WHT**
The Simpsons™ Pinball Party †	6* (5 with Flipper Bats)	090-5032-00T **22-1080 -YEL-GRN-**	SAME	Not Used	090-5030-00T **23-1100 -ORG-ORG-**
		** The Homer Head Assembly is affixed to an Upr. Rt. Style Flipper (no E.O.S. Switch):*	* 090-5020-20T **22-900 -YEL-YEL-**	**Flippers (Mini-Bats) on 2nd Level Playfield:** 090-5041-00T **25-1800 -BLU-GRN-**	090-5025-00T **24-1570 -See Note-**
Terminator® 3: Rise of the Machines™ †	2	090-5032-00T **22-1080 -YEL-GRN-**	SAME	Not Used	Not Used
The Lord of the Rings™ †	2	090-5020-20T **22-900 -YEL-YEL-**	SAME	Not Used	Not Used
Ripley's Believe It or Not!® †	3	090-5032-00T **22-1080 -YEL-GRN-**	SAME	Not Used	090-5067-00T **25-1400 -RED-RED-**

† Coil Part Nºs ending with a "T" signifies the Diode is on the top of the lug (on the coil-winding side); Coil Part Nºs ending with a "B" signifies the Diode is on the bottom of the lugs.

APPENDIX F

Motor Specification (White Star Board System* Only) Table

Game Name	Function	Specifications	Part Numer
Apollo 13	Rocket Up/Down Movement	Bowman Motor 24VAC 60Hz 3W 6 RPM CCW	515-6383-00 *incl. Connector*
	Moon Unit Rotational Orbit	Multi Products Motor 24VAC 50/60Hz 3W 6 RPM CCW	515-6487-00 *incl. Connector*
	Shaker	Johnson Motor *(Vibrator)* 10.5VDC 10 AMP 2950 RPM CW	041-5029-**00** *MOTOR ONLY*
Golden Eye	Satellite Left/Right Movement	Bowman Motor 24VAC 60Hz 3W 6 RPM CW	515-6528-00 *incl. Connector*
Twister	Spinning Disc with Magnet	Multi Products Motor 24VAC *(041-5026-00)* 50/60Hz 3W 325 RPM CCW	515-6347-00 *incl. Connector*
	Backbox Fan (Tornado Wind)	Multi Products Motor 24VAC *(041-5052-00)* 50/60Hz 3W 3600 RPM CW	515-6531-00 *incl. Connector*
ID4: Independence Day	Alien Head Open/Close Movement	Servo Motor *(94322)*	041-5045-00 *MOTOR ONLY*
SPACE JAM (NO MOTOR USED)			
The Star Wars Trilogy - S.E.	X-Wing Left/Right Movement	Bowman Motor 24VAC *(041-5058-00)* 60Hz 3W 10 RPM CCW	515-6383-01 *incl. Connector*
The Lost World: Jurassic Park	Snagger & Center Link Lift Up/Down Movement	Multi Products Motor 20VDC *(041-5059-03)* 9 RPM Non-Directional	515-6715-03 *incl. Connector*
	Shaker	Johnson Motor *(Vibrator)* 10.5VDC 10 AMP 2950 RPM CW	041-5029-**00** *MOTOR ONLY*
The X-Files	X-File Cabinet Lift Up/Down Movement	Multi Products Motor 20VDC 9 RPM CCW	041-5057-00 *MOTOR ONLY*
Starship Troopers	Warrior Bug Forward/Reverse Movement	Haydon Switch & Instrument, Inc. Stepper Motor 12VDC 4.6W *(041-5062-00)*, Series 36000: 1.4"ø *(Non-Captive Shaft **not included**)* HSI #36864-12 *(Unipolar)* Travel per Step: .004 Step Angle: 15°	515-6794-00 *incl. Connector* **Requires 7" Shaft:** 530-5503-00
VIPER NIGHT DRIVIN' (NO MOTOR USED)			
Lost In Space	Spinning Disc with Magnet	Multi Products Motor 24VAC *(041-5046-00)* 50/60Hz 3W 325 RPM CCW	515-6347-00 *incl. Connector*
Godzilla	Shaker ‡	Multi #3811 0630 Motor (Vibrator) 12VDC 3100 RPM CW *(w/DRL PTS)* ‡	041-5029-**01** *MOTOR ONLY*
SOUTH PARK (NO MOTOR USED)			
Harley-Davidson® *1st through 3rd Editions*	Shaker ‡	Multi #3811 0630 Motor (Vibrator) 12VDC 3100 RPM CW *(w/DRL PTS)* ‡	041-5029-**01** *MOTOR ONLY*
	Motorcycle Lift Up/Down Movement	Autotrol 24VAC *(041-5072-02)* 20 RPM CCW	515-7025-00 *incl. Connector*
Striker Xtreme (NFL)	Goalie (Linebacker) Left to Right Movement	Multi #3590 12VDC *(041-5075-00)* 60 RPM	515-7071-00 *incl. Connector*
Sharkey's Shootout	Mystery Ball Rotating Movement	Hankscraft Motor Model-E 24VAC *(041-5076-00)* 50/60Hz 3W 20 RPM CW	515-7095-00 *incl. Connector*
High Roller Casino	Roulette Wheel Rotating Movement	Multi Products Motor 20VDC *(041-5078-00)* 17 RPM CCW	515-7153-00 *incl. Connector*
	Up/Dn. Ramp in Slot Mach. Lift Up/Down Movement	Haydon Switch & Instrument, Inc. Stepper Motor 12VDC 4.6W *(041-5062-00)*, Series 36000: 1.4"ø *(Non-Captive Shaft **not included**)* HSI #36864-12 *(Unipolar)* Travel per Step: .004 Step Angle: 15°	515-6794-00 *incl. Connector* **Requires Shaft 4¼":** 530-5503-01
Austin Powers™	Time Machine Rotating Movement	Multi Products Motor 24VAC *(041-5079-00)* 50/60Hz 20RPM CCW	515-7141-00 *incl. Connector*
	Laser Beam Left to Right Directional	Autotrol Motor 24VAC *(041-5081-00)* 50/60Hz 4W 10RPM Bi-Directional	515-7171-00 *incl. Connector*
	Dr. Evil Target Lift Up/Down Movement	Hankscraft Motor Model-E 24VAC *(041-5030-00)* 50/60Hz 6RPM CCW	515-5900-00 *incl. Connector*
Monopoly®	Mini-Flipper (Waterworks) Rotating Movement	Multi Prod. Motor & Gear Box #7000 EX00159A 20VDC 50/60Hz 85RPM CC/CCW	041-5083-00 *MOTOR ONLY*
Playboy	Triangular Billboard Rotating Movement	Autotrol Motor *(BD511 150-1387)* 24VAC 50/60Hz 12RPM Bi-Directional	041-5086-02 *MOTOR ONLY*
	Centerfold Mechanism Open/Close Movement	Multi Products *(3680)* Motor 12v DC 10/12 RPM CC/CCW	041-5075-04 *MOTOR ONLY*
	Tease Drop Screen Lift Up/Down Movement	Haydon Switch & Instrument, Inc. Stepper Motor 12VDC 4.6W *(041-5062-00)*, Series 36000: 1.4"ø *(Non-Captive Shaft **not included**)* HSI #36864-12 *(Unipolar)* Travel per Step: .004 Step Angle: 15°	515-6794-00 *incl. Connector* **Requires 7" Shaft:** 530-5503-00

‡ ***Please Note:*** *"-01" Shaker Motor is **Not Compatible** with old Shaker Motor 041-5029-**00** (Shaker Motor Assy. 515-5893-00).*
*THIS NEW MOTOR CAN ONLY BE USED IN NEW SHAKER MOTOR ASSY. 515-5893-**01**.*

Table continued on the next page.

Game Name	Function	Specifications	Part Number
ROLLERCOASTER TYCOON™ (NO MOTOR USED)			
THE SIMPSONS™ PINBALL PARTY (NO MOTOR USED)			
Terminator® 3: Rise of the Machines™	Backbox Ball Shooter Up/Down Movement	Multi Products Motor 24VAC *(041-5079-01)* 21 RPM CW	515-7317-00 *incl. Connector*
The Lord of the Rings™	Balrog *(Motor & Gate)* Open/Close Movement	Multi Prod. Motor 20VDC Series 600B *(or equiv.)* 50/60Hz 10 RPM Bi-Directional	041-5088-01 *MOTOR ONLY*
RIPLEY'S BELIEVE IT OR NOT!® (NO MOTOR USED)			
Elvis®	Elvis™ Front/Back Movement	Haydon Switch & Instrument, Inc. Stepper Motor 12VDC 10W *(041-5089-00)*, *(Non-Captive Shaft **not included**)* *HSI #46868-12-002*	500-6809-00 *incl. Connector* **Requires 7.25" Shaft:** 530-5658-00
	▶▶▶ **OPTIONAL** ◀◀◀ Shaker	Multi #3811 0630 Motor *(Vibrator)* 12VDC *(041-5029-**01**) 3100 RPM (w/DRL PTS)*	515-5893-01 *incl. Connector*
The Sopranos℠	Bada Bing! Girls x2 Rotating Posts Movement	Autotrol Synchronous Motor 24VAC 4W 50/60Hz 45.7/54.9 RPM Bi-Directional	041-5092-00 **w/1" Shaft + 12" Leads**
NASCAR® and [NDSE]	Back Panel Rotating *(Car)* Windmill *(Skill Ball Enter)*	Multi Products Motor & Gear Box 20VDC Model #8000 *(EX-04-073)* 10 RPM	041-5093-00 *MOTOR ONLY*
Grand Prix	Back Panel Rotating *(Car)* Windmill *(Skill Ball Enter)*	Multi Products Motor & Gear Box 20VDC Model #8000 *(EX-04-073)* 10 RPM	041-5093-00 *MOTOR ONLY*
World Poker Tour™ (WPT) (NO MOTOR USED)			
The Simpons™ Kooky Carnival	Bart on Skateboard Left/Right Movement	Multi Products Motor with Crank 24VAC *(041-5095-01)* 50/60Hz 3W 14 RPM	500-6947-01 *incl. Connector*
	Left & Right Ramps Up/Down Movement	Multi Products Motor 24VAC *(041-5048-01)* 50/60Hz 3W 15 RPM CCW *(Qty. 2 in game)*	515-7558-00 *incl. Connector*
	Shaker *(details in SKC Manual, Page **24**)*	Multi #3811 0630 Motor *(Vibrator)* 12VDC 3100 RPM *(w/DRL PTS)*	041-5029-**01** *MOTOR ONLY*
©Disney's Pirates of the Caribbean	Spinning Disk	Multi #3811**R** 0630 Motor *(Vibrator)* 12VDC *(041-5029-**04**)* 3100 RPM *(w/DRL PTS)* *-04 is RoHS compliant; can substitute with -01 domestic*	511-5024-04 *incl. Connector*
	Pirate Ship Sinking/Raising Movement	Multi Products Motor & Gear Box 24VDC Model #7000-DCM 12 RPM	041-5101-00 *MOTOR ONLY*
Family Guy™	Stewie Figurine Left & Right Movement	Stepper Motor NPM PF35T-48D4STD 5V RVB *(041-5102-00 Reference Only)*	511-5043-00 *incl. Connector*
Spider-Man™	Doc Ock, Sandman & 3-Bank Up/Down Movement	Sync. Motor 24VAC 50/60Hz 3W 12 RPM CW *(041-5103-00 Reference Only)*	511-5063-00 *incl. Connector*
	▶▶▶ **OPTIONAL** ◀◀◀ **Shaker Motor Kit** 502-5027-00	Multi #3811**R** 0630 Motor *(Vibrator)* 12VDC *(041-5029-**04**) 3100 RPM (w/DRL PTS)* *-04 is RoHS compliant; can substitute with -01 domestic*	515-5893-01 *incl. Connector*

APPENDIX F

Motor Specification Table

The following table only list games that used motors. *Part Numbers starting with "515-" will include the Wiring Harness & Connector.*

Game Name	Function	Specifications	Part №
ABC Monday Night Football	Goal Post Up/Down Movement	Motor 24v A.C. 60 RPM CW	515-5222-00
Phantom of the Opera	Organ Up/Down Movement	Bowman Motor 24v 60Hz 3W 11 RPM CCW	515-5256-00
Checkpoint	Mag Wheel (in Backbox)	Motor D.C. (KEN)	041-5005-00
	Shaker	Johnson Motor (Vibrator)	041-5002-00
Teenage Mutant Ninja Turtles	Spinning Pizza Ball Deflector	Gear Motor 24v A.C. 325 RPM CW	515-5397-00
Batman	Bar Target Up/Down Movement	Bowman Motor 24v 60Hz 3W 11 RPM CCW	515-5256-00
Star Trek 25th Anniversary	Swinging Target	Bowman Motor 24v 22½ RPM	515-5534-00
	Transporter F/X	Gear Motor 24v A.C. 3½ RPM	500-5421-00
	Cooling Fan (for Transporter F/X)	4½" Motor 12v	041-5014-00
Lethal Weapon 3	Spinning Light	Motor 2½ v A.C. 4000 RPM CCW	041-5017-00
Star Wars	Bar Target Up/Down Movement	Bowman Motor 24v 60hz 3W 11 RPM CCW	515-5256-00
	R2D2 Robot Left/Right Movement	Bowman Motor 24v A.C. 22½ RPM CW	515-5571-00
	Death Star Rotation	Bowman "G" Motor 24v A.C. 60Hz 6 RPM CW	515-5570-00
Rocky & Bullwinkle & Friends	Nell Log "Cutting Blade" Forward/Back Movement	Autotrol Model E Motor 24v 60hz 4W 3 RPM CCW	041-5023-00
Jurassic Park	T-Rex Left/Right Movement	Multi Motor 5v D.C.	041-5025-00
	T-Rex Up/Down Movement	Bowman Motor 24v 11 RPM CW	041-5026-00
	Shaker	Johnson Motor (Vibrator)	041-5002-00
Last Action Hero	Crane Left/Right Movement	Multi Products Motor 12v D.C. #3312 OSC	041-5027-00
	Shaker	Johnson Motor (Vibrator) 10.5v D.C. 10 AMP 2950 RPM CW	041-5029-00
Tales from the Crypt	Tombstone Up/Down Movement	Bowman Motor 24v A.C. 6 RPM CCW	515-5900-00
	Shaker	Johnson Motor (Vibrator) 10.5v D.C. 10 AMP 2950 RPM CW	041-5029-00
The Who's Tommy	Mirror Up/Down Movement	Bowman Motor 24v A.C. 6 RPM CCW	515-5900-00
	Flipper Blinders	Servo Motor (94102)	041-5032-00
	Spinning Airplane Propellers	Motor D.C.	041-5033-00
WWF Royal Rumble	Shaker	Johnson Motor (Vibrator) 10.5v D.C. 10 AMP 2950 RPM CW	041-5029-00
Maverick, The Movie	Turning Paddle Wheel	Motor 24v A.C. 10 RPM	041-5036-00
Mary Shelley's Frankenstein	Creature Head Left/Right Movement	Servo Motor (94102)	041-5032-00
Batman Forever	Cannon Left/Right Movement	Bowman Motor 24v A.C. 60Hz 3W 6 RPM CCW	515-6383-00

APPENDIX G

Part Number Prefix Classification Codes

I. Electrical Source, Energy & Signal Converters
- 010- Transformers
- 031- Speakers
- 090- Solenoids (Coils)
- 150- Filters, Outlets, Varistors, Thermistors
- 200- Fuses

II. Conductors, Connectors & Insulators
- 034- Line Cords
- 036- Cable Assemblies & Wiring Harnesses
- 041- Motors
- 045- Connectors (All Types)
- 055- Lugs (M/F), Pins (M/F), Discs, Ring Terminals, Terminal Strips, etc.
- 060- Polarizing Keys and Conn. Covers
- 077- Lamp Sockets

III. Circuits & Circuit Elements
- 100- ICs
- 110- Transistors
- 112- Diodes (All Types including LEDs & Modules)
- 121- Resistors
- 123- Resistors (Variable & Adjustable)
- 124- Regulators & Bridge Rectifiers
- 125- Capacitors (Radial Lytics & Ferrites)
- 126- Piezo Crystal
- 127- Heatsinks
- 130- Capacitors (Tecates & Ceramics)
- 140- Oscillators (Clocks/Crystals)
- 165- Light Bulbs
- 180- Switches
- 181- Switch Membranes (Pads) & Piezo Sensors
- 190- Relays
- 960- EPROM *(Raw Part)*
- 965- EPROM *(Programmed Part)*

IV. Bolts, Screws, Nuts, Washers & Nails
- 231- Bolts
- 232- Screws (Pan Head)
- 234- Screws (HWH)
- 237- Screws (Misc.)
- 240- Nuts (Misc.)
- 242- Washers (Flat, Round)
- 244- Washers (Split Lock)
- 245- Nyliners
- 246- Washers (Lockers, External Tooth)
- 281- Nails

V. Mechanical Components
- 249- Rivets
- 251- Pins (Dowel), Finishing Nails, Hairpins, Spring Pins and Clevis Pins
- 254- Stand-Offs, Spacers and Shims
- 260- Steel Ball (All Types Steel, Glowing, Delrin, etc.)
- 265- Springs (Extension)
- 266- Springs (Compression)
- 267- Springs (Torsion)
- 269- Springs (Washers - Belleville, Wave)
- 270- Retaining Rings
- 280- Grommets, Bushings and Nyliners
- 283- Bearings

VI. Handles, Locks, Catches, Latches, Keys
- 355- Handles, Locks, Catches, Latches and Keys

VII. Fabricated Parts
- 390- Hinges
- 501- Coin Doors
- 515- Sub-Assemblies
- 520- Printed Circuit Boards (PCBs)
- 522- Display Glass
- 525- Wood Parts
- 530- Screw Machined Parts
- 535- Fabricated Parts
- 545- Molded (Extruded) Plastic and Rubber Parts (Rings, Sleeves, etc.)
- 550- Molded (Inserts)

VIII. In-House Assemblies
- 500- End Product (Systems and Models)
- 502- Kits (Created In-House)
- 505- Cabinets (complete)
- 510- Riveted Sub-Assemblies (In-House)
- 511- Sub-Assemblies (In-House)
- 515- Sub-Assemblies*

  **2 or more 515-'s but still a sub-assembly.*

IX. Bulk Materials
- 600- Braided Wire & Ground Straps
- 601- Stranded Wire
- 602- Ribbon Cable
- 604- Telephone Line Cord
- 605- Sleeving (Shrink Tubing)
- 625- Velcro (non-adhesive)
- 626- Foam Rubber, Foam Pads, Rubber Bumpers (Blue Pads), Tape (All Types) Velcro (adhesive) and String / Rope

X. Miscellaneous
- 000- Tools *(see also 777-)* and Supplies
- 040- Clamps, Ties & Clips
- 042- Pulleys
- 091- Coin Mechs
- 205- Fuse Holders
- 631- Staples
- 660- Glass (Playfield, Backglass, etc.)
- 675- Cleaners
- 705- Packing & Shipping Items
- 755- Instruction, Coin Cards, Ins. Sheets
- 756- Information Sheets, Service Bulletins, Instruction Sheets in Kits and Templates
- 777- Tools (Wrenches and Drivers)
- 780- Manuals
- 802- Decal Kits (comprised of 820's)
- 820- Decals, Mylar and Labels (Sheets/Sets)
- 803- Plastic Kits (comprised of 830's)
- 830- Plastic Pieces (Butyrate Sheets/Sets)
- 880- Toys, Models, Figurines, etc.
- 900- Game Posters

APPENDIX H

Playfield Inserts (Plastic Light Covers)

Patterns: STARBURST **STIPPLE**	**STARBURST CIRCULAR** 5/8" ø **550-5000-XX**	**STARBURST CIRCULAR** 3/4" ø **550-5001-XX**	**STARBURST CIRCULAR** 1" ø **550-5002-XX**	**STARBURST CIRCULAR** 1-3/16" ø **550-5003-XX**	**STARBURST CIRCULAR** 1-1/2" ø **550-5004-XX**
STARBURST CIRCULAR 2-1/4" ø **550-5005-XX**	**STARBURST CIRCULAR** 2-3/4" ø **550-5006-XX**	**PLAIN CIRCULAR** 3/4" ø **550-5007-XX**	**PLAIN CIRCULAR** 1" ø **550-5008-XX**	**PLAIN CIRCULAR** 1-3/16" ø **550-5009-XX**	**PLAIN CIRCULAR** 1-1/2" ø **550-5010-XX**
PLAIN CIRCULAR 2-1/4" ø **550-5011-XX**	**PLAIN CIRCULAR** 2-3/4" ø **550-5012-XX**	**STIPPLE CIRCULAR** 1" ø **550-5048-XX**	**STIPPLE 1" SQUARE** 1" **550-5019-XX**	**ROLLOVER BUTTON BASE** **550-5026-XX**	**WHITE STAR** *(only in white)* **545-5015-00**
STIPPLE RECTANGULAR 1-1/2" X 3/4" **550-5018-XX**	**STIPPLE RECTANGULAR** 1-5/8" X 1-1/2" **550-5051-XX**	**STARBURST RECTANGULAR** 2-1/4" X 1-1/8" **550-5044-XX**	**PLAIN RECTANGULAR** 2-1/4" X 1-1/8" **550-5049-XX**	**PLAIN RECTANGULAR** 1-1/4" X 1-1/2" **550-5050-XX**	**PLAIN RECTANGULAR** 2" X 2-1/2" **550-5063-XX**
STARBURST MINI SHIELD 1" X 1" **550-5024-XX**	**STARBURST LARGE SHIELD** **550-5025-XX**	**MINI HOT DOG** 1-5/8" **550-5020-XX**	**BEVEL HOT DOG** 3-1/2" **550-5021-XX**	**PLAIN HOT DOG** 3-1/2" **550-5022-XX**	**BANANA** **550-5023-XX**
STARBURST ARROW-SMALL **550-5013-XX**	**STARBURST ARROW-LARGE** **550-5070-XX**	**STARBURST ARROW-HEAD SMALL** **550-5014-XX**	**STARBURST ARROW-HEAD LARGE** **550-5015-XX**	**STARBURST BULLET** **550-5016-XX**	**STARBURST TRIANGLE** **550-5017-XX**

Note: *The shapes and sizes shown above are not to scale. Some shapes may no longer be available in every color.*

Instructions: Parts which may come in various colors (i.e. targets, some posts, playfield inserts, etc.) end in a 2-digit number which correspond to the color of that part. The "**-XX**" in part number which may come in various colors should be replaced with the desired 2-Digit number corresponding to the color desired below. *Not all colors may be available.*

PLASTIC PART COLOR CHART

Nº	Color	Nº	Color	Nº	Color	Nº	Color	Nº	Color	Nº	Color
-00	**Black** or Solid Clear	-03	Amber	-06	Yellow	-09	Purple	-12	Fluor. Blue	-15	Luminescent
-01	Clear	-04	Green	-07	Orange	-10	Fluor. Orange	-13	Teal Green	-16	Gold
-02	Red	-05	Blue	-08	White	-11	Fluor. Green	-14	Gray	-17	Trans. Brown

APPENDIX I

Stand-Up Targets

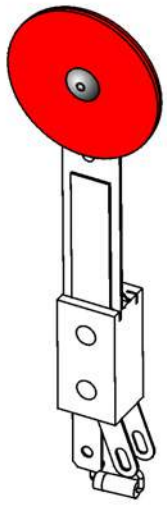

112-5003-00
Switch Diode, 1N4004
(all Stand-Up Targets)

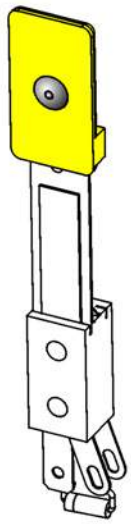

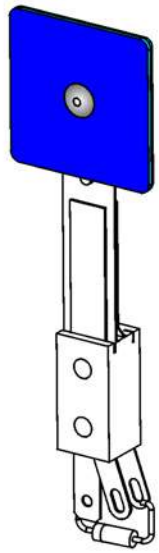

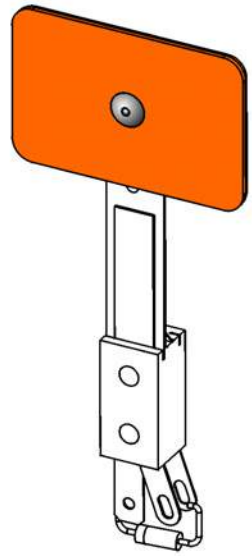

515-5966-XX
1" ROUND STAND-UP
SWITCH & TARGET
RIVETED ASSEMBLY*

STANDARD / ANTI-LOFT
515-5967-XX *or* **515-7581-XX**
1" X 1/2" NARROW STAND-UP
SWITCH & TARGET
RIVETED ASSEMBLY*

515-5162-XX
1" X 1" SQUARE STAND-UP
SWITCH & TARGET
RIVETED ASSEMBLY*

515-6027-XX
1" X 1-1/2" RECTANGLE STAND-UP
SWITCH & TARGET
RIVETED ASSEMBLY*

**Note: Does not include the Switch Back Plate, Mounting Bracket or screws.*

To include the Switch Back Plate, Foam Pad, and Switch Mounting Bracket assembled, use the follow assembly part numbers (replace the -XX with 2-digit number from chart):

500-5835-XX : 1" ROUND TARGET
500-5857-XX : 1" X 1/2" NARROW TARGET
500-6985-XX : 1" X 1/2" ANTI-LOFT TARGET
500-5232-XX : 1" X 1" SQUARE TARGET
500-5321-XX : 1" X 1-1/2" RECT. TARGET

REAR VIEW 515-5967-06 SHOWN

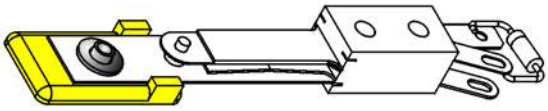

SHOWN BELOW : 500-5857-06
1" X 1/2" NARROW STAND-UP
TARGET ASSEMBLY COMPLETE

626-50**29**-00
Foam Pad, Square
.44" X .44" X .125" Thick (Self-Adhesive)**

*** Note:*
Use with all Switch & Targets THIS page except for 515-7581-XX.

535-6896-00
Bracket, Switch Mounting
(all targets THIS page)

237-5976-05
#6-32 X 3/4" SHWH Sc.
(all targets THIS page)

535-**6452-00**
Switch Back Plate**

515-5967-XX
1" X 1/2" NARROW
STAND-UP (STANDARD)
SWITCH & TARGET
RIVETED ASSEMBLY*

-XX REPLACE WITH 2-DIGIT FOR COLOR:
-00 Black
-01 Clear
-02 Red
-03 Amber
-04 Green
-05 Blue
-06 Yellow
-07 Orange
-08 White
-09 Purple
-10 Fluor. Orange
-11 Fluor. Green
-12 Fluor. Blue
-13 Teal Green
-14 Gray
-15 Luminescent
-16 Gold

Note: Not all colors available.

SHOWN BELOW : 500-6985-04
1" X 1/2" NARROW ANTI-LOFT
STAND-UP TARGET
ASSEMBLY COMPLETE

626-**5069**-00
Foam Pad, Rectangle
.6" X .4" X .25" Thick (Self-Adhesive) ‡

535-**9823-01**
Switch Back Plate ‡

‡ Note: *Use only with 515-7581-XX Switch & Target Assembly unless otherwise noted.*

535-6896-00
Bracket, Switch Mounting
(all targets THIS page)

237-5976-05
#6-32 X 3/4" SHWH Sc.
(all targets THIS page)

515-7581-XX
1" X 1/2" NARROW
STAND-UP TALL
SWITCH & TARGET
RIVETED ASSEMBLY*

ORDERING NOTE: 515-7581-XX *(500-6985-XX) differences from* ***515-5967-XX*** *(500-5857-XX) are:*

1. Switch & Target Taller *(Target sits higher over P/F)*
2. Switch Back Plate differs *(bend, shape & tab)*
3. Foam Pad differs *(thicker, taller, different type foam)*

**Note: Does not include the Switch Back Plate, Mounting Bracket or screws.*

"**R**" means «Target Insert» is reversed, allowing for Rear Mounted application.

-XX REPLACE WITH 2-DIGIT FOR COLOR:
-00 Black
-01 Clear
-02 Red
-03 Amber
-04 Green
-05 Blue
-06 Yellow
-07 Orange
-08 White
-09 Purple
-10 Fluor. Orange
-11 Fluor. Green
-12 Fluor. Blue
-13 Teal Green
-14 Gray
-15 Luminescent
-16 Gold
Note: Not all colors available.

Take Note:

1. **Items A-E** come in various colors. *These targets may not be available in every color.* The "**-XX**" in should be replaced with the desired 2-Digit number for the color desired as described in the Color Chart below. *As of print date, the following colors were used :*
-01 Clear (A, D); **-02** Red (A, B, C, D, E); **-03** Amber (D, E); **-04** Green (A, B); **-05** Blue (C); **-06** Yellow (A, C), **-09** Purple (B, D); **-11** Fluorescent Green (A, B, D)
2. *For location(s) and type of Stand-Up Targets used, if any, see Section **4**, Chapter **1**, Parts Identification & Location.*

Nr.	STAND-UP TARGET PARTS	SPI PART Nr.
A	Modular Stand-Up Target Narrow Assy.	500-6138-XX
	Stand-Up Target Narrow (Insert)	**545-6138-XX**
B	Modular Stand-Up Target Square Assy.	500-6139-XX
	Stand-Up Target Square (Insert)	**545-6139-XX**
C	Modular Stand-Up Target Rectangle Assy.	500-6228-XX
	Stand-Up Target Rectangle (Insert)	**545-6228-XX**
D	Modular Stand-Up Target Round Assy.	500-6075-XX
	Stand-Up Target Round (Insert)	**545-6075-XX**
E	Mod. Stand-Up Target 1" Spherical Assy.	500-6189-XX
	Stand-Up Target 1" Spherical (Insert)	**545-6189-XX**

To Replace the « Target Insert » or change Target Orientation :

Items A-E Note: For the Target Assembly use the "**500-**" SPI Part Number(s) shown in the Parts Table below. To receive the Target Assembly with the « Target Insert » « ***Reversed*** » *simply add a **"R"** at the end of the Part Number. See Side View picture left to compare (dashed line shows target reversed).* For just the «Target Insert» use the "**545-**" SPI Part Number.

To reverse it yourself or to just change the insert:

1. With a small flat head screwdriver, push into the small tab at the bottom of the target front and give a slight twist motion to "pop" the two halves.

2. Push the Target Insert bottom in at the same time while you slide the top (front) part up, then let go of the insert as the two halves come apart.

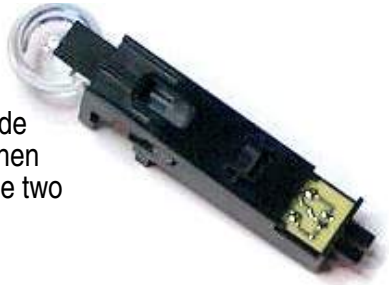

3. Replace target or reinsert it into the other size while sliding the two halves back together.

Note: *If you were reversing the orientation, don't forget to also turn the Switch Actuator PCB **180°**. Test Switch.*

APPENDIX J

Coin Cards (USA & International Pricing Defaults) ▶ For Yellow Stock add -Y to the Part Number

*If more than one Pricing Scheme is available for countries listed, the **F.** listed beside the option, denotes the Factory Default Setting.*

FOR VIEWS OF THE LATEST or OPTIONAL USA, INTERNATIONAL / EURO AND CUSTOM COIN CARDS, VISIT OUR WEBSITE.

Not Shown USA 755-5400-10 Tournament Option $2 = X1; 755-5400-11 Tournament Option $1.50 = X1

USA 10 *F.*	USA 10	USA 2-7 *or* CANADA	*FOR CUSTOM PRICING †*	USA 3 *with* ToPS™	USA 5 *with* ToPS™
NON-TOURNAMENT PLAY $ .75=x1 $2.00=x3 TOURNAMENT PLAY! $1.50=x1	75¢=x1 SUPER VALUE $2.00=x3	50¢=x1	Backside is Blank (Border Only) *Typeset your Custom Pricing*	NON-TOURNAMENT PLAY $ .50=x1 $1.00=x2 TOURNAMENT PLAY! $1.00=x1	NON-TOURNAMENT PLAY $ .50=x1 $2.00=x5 TOURNAMENT PLAY! $1.00=x1
755-5400-11 *Front*	755-5400-11 *Back*	755-5400-02 *Front*	755-5400-01, -02 *or* -04 *Back*	755-5400-03 *or* -09 *Front*	755-5400-03 *Back / -08 Front*
AUSTRALIA 1 *F.*	**AUSTRALIA 2**	**CROATIA**	*FOR CUSTOM PRICING †*	**DENMARK 1** *F.*	**DENMARK 2**
$1.00=x1 SUPER VALUE $2.00=x3	$1.00=x1	3 KUNA=x1 5 KUNA=x2	Backside is Blank (Border Only) *Typeset your Custom Pricing*	Kr.3,00=x1 Kr.5,00=x2	Kr.2,00=x1 Kr.5,00=x3 Kr.10,00=x7
755-5406-00 *Front*	755-5406-00 *Back*	755-5410-00 *Front*	755-5410-00 *Back*	755-5402-00 *Front*	755-5402-00 *Back*
JAPAN 1	**JAPAN 2** *F.*	**MIDDLE EAST**	*ANY COUNTRY CAN USE*	**NEW ZEALAND 1** *F.*	**NEW ZEALAND 2**
¥100=x1	¥100=x1 ¥200=x3	TOKEN=x1	COIN=x1	$1.00=x1	$1.00=x1 SUPER VALUE $2.00=x3
755-5408-01 *Front*	755-5408-01 *Back*	755-5400-06 *Front*	*755-5400-06 Back*	*755-5406-00 Back*	755-5406-00 *Front*
NORWAY 1 *F.*	**NORWAY 2**	**RUSSIA** *F.*	**RUSSIA (ALTERNATE)**	**SOUTH AFRICA**	*FOR CUSTOM PRICING †*
Kr. 10,00=x1	Kr. 10,00=x1 Kr.20,00=x3	5 Рублей=x1	Жетон=x1	R2=x1	Backside is Blank (Border Only) *Typeset your Custom Pricing*
755-5403-01 *Front*	755-5403-01 *Back*	755-5411-00 *Front*	755-5411-00 *Back*	755-5409-01 *Front*	755-5409-01 *Back*
SWEDEN 1 *F.*	**SWEDEN 2**	**SWITZERLAND 1** *F.*	**SWITZERLAND 2**	**TAIWAN**	*FOR CUSTOM PRICING †*
10,00 kr.=x1 15,00 kr.=x2 20,00 kr.=x3	5,00 kr.=x1	sf 1,00=x1 sf 5,00=x6	sf 1,00=x1 sf 2,00=x3 sf 5,00=x9	TWD10=x1	Backside is Blank (Border Only) *Typeset your Custom Pricing*
755-5404-00 *Front*	755-5404-00 *Back*	755-5405-00 *Front*	755-5405-00 *Back*	755-5412-00 *Front*	755-5412-00 *Back*
UK 1	**UK 3**	**UK 5** *F.*	*FOR CUSTOM PRICING †*		
£1.00=x3 £2.00=x7	£ .50=x1 £1.00=x2 £2.00=x5	£1.00=x1 £2.00=x3	Backside is Blank (Border Only) *Typeset your Custom Pricing*		
755-5407-00 *Front*	755-5407-00 *Back*	755-5407-01 *Front*	755-5407-01 *Back*		

Not Shown EURO 755-5401-20 Tournament Custom (can fill in your own pricing).

Appendix J Notes:

1. Coin Card on Game is determined by original shipping country destination.
2. Optional Coin Card(s), are available via your distributor or via free download @ www.sternpinball.com/**coinagecards.shtml**.

Older style Coin Cards (foreign or domestic) not available on our website or no longer available through your distributor, are obsolete.

3. Coin Cards which have a Blank Backside *can be used for* †***Custom Pricing***.

EURO 1	EURO 2	EURO 3	EURO 4	EURO 5	EURO 6
€ .50=x1	€ .50=x1 €1.00=x2 €2.00=x5	€ .50=x1 €1.00=x3	€ .50=x1 €1.00=x2 €2.00=x6	€ .50=x1 €1.00=x3 €2.00=x7	€ .50=x2
755-5401-01 *1-Side Only*	755-5401-02 *1-Side Only*	755-5401-03 *1-Side Only*	755-5401-04 *1-Side Only*	755-5401-05 *1-Side Only*	755-5401-06 *1-Side Only*
EURO 7	**EURO 8**	**EURO 9**	**EURO 10**	**EURO 11**	**EURO 12**
€1.00=x1 €4.00=x5	€1.00=x1 €2.00=x3	€1.00=x1 €1.50=x2 €2.00=x3	€1.00=x1 €2.00=x3 €3.00=x7	€1.00=x1 €2.00=x4	€1.00=x2 €4.00=x9
755-5401-07 *1-Side Only*	755-5401-08 *1-Side Only*	755-5401-09 *1-Side Only*	755-5401-10 *1-Side Only*	755-5401-11 *1-Side Only*	755-5401-12 *1-Side Only*

◣ EURO FACTORY DEFAULT SUMMARY TABLE ◢

EURO 1	EURO 2	EURO 3	EURO 4	EURO 5	EURO 6	EURO 7	EURO 8	EURO 9	EURO 10	EURO 11	EURO 12
BELGIUM ITALY 1 PORTUGAL	*GERMANY 2*	*NETHERLANDS SPAIN*			*GREECE*		*FINLAND*	*AUSTRIA*	*FRANCE*		

Section ***3***, *Chapter* ***4***, ***GO TO ADJUSTMENTS MENU***, *Adj.* ***18***, ***Game Pricing***, ***USA & International (non-Euro) and Euro 1-12 Summary & International (Euro) Standard Pricing Select Tables***, *summarizes Standard or Custom Pricing Schemes & the Dip Switch Setting required.*

APPENDIX A

Pinball Game Firmware (White Star Board System* Only) Table

See website for the latest International Code or Updated USA version / checksums

ROM	Chip Size	Program Part Nº	USA Ver. & Check Sum	Bd. Loc.	Raw Part Nº
Apollo 13 (Note 1)					
Game ROM	(1M)	965-0208-00	**A5.01 | $09FF**	**U210**	960-5009-00
Sound	(512K)	965-0212-00	1.00 | $5244	U7	960-7001-02
Display	(4M)	965-0213-00	**A5.00 | $B92B**	**ROM 0**	960-5015-01
Voice 1	(4M)	965-0209-00	1.00 | $7FC7	U17	n/a (masked)
Voice 2	(4M)	965-0210-00	1.00 | $8E55	U21	n/a (masked)
Voice 3	(4M)	965-0211-00	1.00 | $08EE	U36	n/a (masked)
Golden Eye (Note 1)					
Game ROM	(1M)	965-0214-42	**A4.04 | $3FFF**	**U210**	960-5009-00
Sound	(512K)	965-0217-42	1.00 | $D615	U7	960-7001-02
Display	(4M)	965-0218-42	**A4.00 | $E6ED**	**ROM 0**	960-5015-01
Voice 1	(4M)	965-0215-42	1.00 | $3E32	U17	n/a (masked)
Voice 2	(4M)	965-0216-42	1.00 | $71F0	U21	n/a (masked)
Twister (Note 2)					
Game ROM	(1M)	965-0219-41	**A4.05 | $E9FF**	**U210**	960-5009-00
Sound	(512K)	965-0221-41	1.00 | $1FFF	U7	960-7001-02
Display	(4M)	965-0222-41	**A4.00 | $FD01**	**ROM 0**	960-5015-01
Voice 1	(4M)	965-0220-41	1.00 | $3650	U17	960-5015-01
Voice 2	(4M)	965-0223-41	1.00 | $9300	U21	960-5015-01
ID4: Independence Day (Note 2)					
Game ROM	(1M)	965-0224-45	**A2.02 | $9CFF**	**U210**	960-5009-00
Sound	(512K)	965-0227-45	1.00 | $222B	U7	960-7001-02
Display	(4M)	965-0228-45	**A2.00 | $ABF7**	**ROM 0**	960-5015-01
Voice 1	(4M)	965-0225-45	1.00 | $3AE1	U17	960-5015-01
Voice 2	(4M)	965-0226-45	1.00 | $206E	U21	960-5015-01
Space Jam (Note 2)					
Game ROM	(1M)	965-0229-43	**A3.00 | $E6FF**	**U210**	960-5009-00
Sound	(512K)	965-0233-43	1.00 | $F1E7	U7	960-7001-02
Display	(4M)	965-0234-43	**A3.00 | $0057**	**ROM 0**	960-5015-01
Voice 1	(4M)	965-0230-43	1.00 | $DBA8	U17	960-5015-01
Voice 2	(4M)	965-0231-43	1.00 | $DDF1	U21	960-5015-01
Voice 3	(4M)	965-0232-43	1.00 | $F32A	U36	960-5015-01
The Star Wars Trilogy - Special Edition (S.E.) (Note 2)					
Game ROM	(1M)	965-0235-56	**A4.03 | $5EFF**	**U210**	960-5009-00
Sound	(512K)	965-0238-56	1.00 | $4A7D	U7	960-7001-02
Display	(4M)	965-0239-56	**A4.00 | $8817**	**ROM 0**	960-5015-01
Voice 1	(4M)	965-0236-56	1.00 | $E66B	U17	960-5015-01
Voice 2	(4M)	965-0237-56	1.00 | $8F54	U21	960-5015-01
The Lost World: Jurassic Park (Note 2)					
Game ROM	(1M)	965-0240-53	**A2.02 | $C8FF**	**U210**	960-5009-00
Sound	(512K)	965-0243-53	1.00 | $A35B	U7	960-7001-02
Display	(4M)	965-0244-53	**A2.01 | $7F46**	**ROM 0**	960-5015-01
Voice 1	(4M)	965-0241-53	1.00 | $1D27	U17	960-5015-01
Voice 2	(4M)	965-0242-53	1.00 | $8DA4	U21	960-5015-01
The X-Files (Note 2)					
Game ROM	(1M)	965-0245-46	**A3.03 | $A2FF**	**U210**	960-5009-00
Sound	(512K)	965-0248-46	1.00 | $6648	U7	960-7001-02
Display	(4M)	965-0249-46	**A3.00 | $66D0**	**ROM 0**	960-5015-01
Voice 1	(4M)	965-0246-46	1.00 | $349D	U17	960-5015-01
Voice 2	(4M)	965-0247-46	1.00 | $629C	U21	960-5015-01
Starship Troopers (Note 3)					
Game ROM	(1M)	965-0250-59	**A2.00 | $85FF**	**U210**	960-5009-00
Sound	(512K)	965-0253-59	1.00 | $64B2	U7	960-7001-02
Display	(4M)	965-0254-59	**A2.00 | $E77B**	**ROM 0**	960-5015-01
Voice 1	(4M)	965-0251-59	1.00 | $152A	U17	960-5015-01
Voice 2	(4M)	965-0252-59	1.00 | $0291	U21	960-5015-01
Voice 3	(4M)	965-0255-59	1.00 | $95A7	U36	960-5015-01
Viper Night Drivin' (Note 4)					
Game ROM	(1M)	965-0266-35	**A2.01 | $C5FF**	**U210**	960-5009-00
Sound	(512K)	965-0271-35	1.00 | $4DF8	U7	960-7001-02
Display	(4M)	965-0272-35	**A2.01 | $C17D**	**ROM 0**	960-5015-01
Voice 1	(4M)	965-0267-35	1.00 | $8018	U17	960-5015-01
Voice 2	(4M)	965-0268-35	1.00 | $2157	U21	960-5015-01
Voice 3	(4M)	965-0269-35	1.00 | $B5A6	U36	960-5015-01
Voice 4	(4M)	965-0270-35	1.00 | $D01E	U37	960-5015-01
Lost In Space (Note 4)					
Game ROM	(1M)	965-0282-60	**A1.01 | $B2FF**	**U210**	960-5009-00
Sound	(512K)	965-0287-60	1.00 | $A6AF	U7	960-7001-02
Display	(4M)	965-0288-60	**A1.02 | $32AB**	**ROM 0**	960-5015-01
Voice 1	(4M)	965-0283-60	1.00 | $4391	U17	960-5015-01
Voice 2	(4M)	965-0284-60	1.00 | $8215	U21	960-5015-01
Voice 3	(4M)	965-0285-60	1.00 | $5B32	U36	960-5015-01
Voice 4	(4M)	965-0286-60	1.00 | $8971	U37	960-5015-01
Godzilla (Note 4)					
Game ROM	(1M)	965-0289-40	**A2.05| $B1FF**	**U210**	960-5009-00
Sound	(512K)	965-0294-40	1.00 | $0CC8	U7	960-7001-02
Display	(4M)	965-0295-40	**A2.00 | $C929**	**ROM 0**	960-5015-01
Voice 1	(4M)	965-0290-40	1.00 | $0D75	U17	960-5015-01
Voice 2	(4M)	965-0291-40	1.00 | $CCCF	U21	960-5015-01
Voice 3	(4M)	965-0292-40	1.00 | $227F	U36	960-5015-01
Voice 4	(4M)	965-0293-40	1.00 | $DB69	U37	960-5015-01
South Park (Notes 4, 5)					
Game ROM	(1M)	965-0301-71	**A1.03 | $58FF**	**U210**	960-5009-00
Sound	(512K)	965-0306-71	1.00 | $1286	U7	960-7001-02
Display	(4M)	965-0307-71	**A1.01 | $166F**	**ROM 0**	960-5015-01
Voice 1	(8M)	965-0302-71	1.00 | $7BF8	U17	960-5016-00
Voice 2	(8M)	965-0303-71	1.00 | $9CCC	U21	960-5016-00
Voice 3	(8M)	965-0304-71	1.00 | $ADD9	U36	960-5016-00
Voice 4	(8M)	965-0305-71	1.00 | $6659	U37	960-5016-00
Harley-Davidson® (Notes 4, 5, 6) *Original (1999-2001)*					
Game ROM	(1M)	965-0319-67	**A1.03 | $3EFF**	**U210**	960-5009-00
Sound	(512K)	965-0320-67	1.00 | $F4FF	U7	960-7001-02
Display	(4M)	965-0321-67	**A1.04 | $FC7C**	**ROM 0**	960-5015-01
Voice 1	(8M)	965-0322-67	1.00 | $CD26	U17	960-5016-00
Voice 2	(8M)	965-0323-67	1.00 | $9396	U21	960-5016-00
Voice 3	(8M)	965-0324-67	1.00 | $FB72	U36	960-5016-00
Voice 4	(4M)	965-0325-67	1.00 | $6100	U37	960-5015-01
▶ **Harley-Davidson® (Notes 4, 5, 6, 8) *2nd Edition (2002-2003)***					
Game ROM	(1M)	965-0319-67**A**	**A1.08 | $23FF**	**U210**	960-5009-00
Display	(4M)	965-0321-67**A**	**A1.05 | $B594**	**ROM 0**	960-5015-01
▶ **Harley-Davidson® (Notes 4, 5, 6, 8) *3rd Edition (2004)***					
Game ROM	(1M)	965-0319-87	**A4.00 | $1CFF**	**U210**	960-5009-00
Display	(4M)	965-0321-87	**A4.00 | $F4FF**	**U5**	960-5015-01
Striker Xtreme (Notes 4, 5)					
Game ROM	(1M)	965-0326-68	**A1.03 | $E4FF**	**U210**	960-5009-00
Sound	(512K)	965-0327-68	1.00 | $3BCA	U7	960-7001-02
Display	(4M)	965-0328-68	**A1.03 | $1957**	**ROM 0**	960-5015-01
Voice 1	(8M)	965-0329-68	1.00 | $482A	U17	960-5016-00
Voice 2	(8M)	965-0330-68	1.00 | $7312	U21	960-5016-00
Voice 3	(8M)	965-0331-68	1.00 | $DE2F	U36	960-5016-00
Voice 4	(8M)	965-0332-68	1.00 | $C508	U37	960-5016-00
NFL (Notes 4, 5) *Not on CD-R or Website: Code through Distributor Only.*					
Game ROM	(1M)	965-0339-73	**A1.00 | $D2FF**	**U210**	960-5009-00
Sound	(512K)	965-0340-73	1.00 | $	U7	960-7001-02
Display	(4M)	965-0341-73	**A1.01 | $845A**	**ROM 0**	960-5015-01
Voice 1	(8M)	965-0342-73	1.00 | $	U17	960-5016-00
Voice 2	(8M)	965-0343-73	1.00 | $	U21	960-5016-00
Voice 3	(8M)	965-0344-73	1.00 | $	U36	960-5016-00
Voice 4	(8M)	965-0345-73	1.00 | $	U37	960-5016-00
Sharkey's Shootout (Notes 4, 5)					
Game ROM	(1M)	965-0333-72	**A2.11 | $49FF**	**U210**	960-5009-00
Sound	(512K)	965-0334-72	1.01 | $9796	U7	960-7001-02
Display	(4M)	965-0335-72	**A2.01 | $6C33**	**ROM 0**	960-5015-01
Voice 1	(8M)	965-0336-72	1.00 | $58EA	U17	960-5016-00
Voice 2	(8M)	965-0337-72	1.00 | $272B	U21	960-5016-00
Voice 3	(8M)	965-0338-72	1.00 | $41AE	U36	960-5016-00
High Roller Casino (Notes 4, 5)					
Game ROM	(1M)	965-0346-65	**A3.00 | $90FF**	**U210**	960-5009-00
Sound	(512K)	965-0347-65	1.00 | $581C	U7	960-7001-02
Display	(4M)	965-0348-65	**A3.00 | $74B3**	**ROM 0**	960-5015-01
Voice 1	(8M)	965-0349-65	1.00 | $E12D	U17	960-5016-00
Voice 2	(8M)	965-0350-65	1.00 | $38F4	U21	960-5016-00
Voice 3	(8M)	965-0351-65	1.00 | $1B54	U36	960-5016-00
Voice 4	(8M)	965-0352-65	1.00 | $D720	U37	960-5016-00
Austin Powers™ (Notes 4, 5)					
Game ROM	(1M)	965-0353-74	**A3.02 | $5DFF**	**U210**	960-5009-00
Sound	(512K)	965-0354-74	1.00 | $DA7B	U7	960-7001-02
Display	(4M)	965-0035-74	**A3.00 | $6A34**	**ROM 0**	960-5015-01
Voice 1	(8M)	965-0356-74	1.00 | $D2B9	U17	960-5016-00
Voice 2	(8M)	965-0357-74	1.00 | $9E75	U21	960-5016-00
Voice 3	(8M)	965-0358-74	1.00 | $51F3	U36	960-5016-00
Voice 4	(8M)	965-0359-74	1.00 | $0AE5	U37	960-5016-00
MONOPOLY® (Notes 4, 5)					
Game ROM	(1M)	965-0360-75	**A3.20 | $07FF**	**U210**	960-5009-00
Sound	(512K)	965-0361-75	1.00 | $8C18	U7	960-7001-02
Display	(4M)	965-0362-75	**A3.01 | $A381**	**ROM 0**	960-5015-01
Voice 1	(8M)	965-0363-75	1.00 | $35E6	U17	960-5016-00
Voice 2	(8M)	965-0364-75	1.00 | $B35A	U21	960-5016-00
Voice 3	(8M)	965-0365-75	1.00 | $8A9F	U36	960-5016-00
Playboy (Notes 4, 5, 7)					
Game ROM	(1M)	965-0367-76	**A5.00 | $7DFF**	**U210**	960-5009-00
Sound	(512K)	965-0368-76	1.02 | $E7C2	U7	960-7001-02
Display	(4M)	965-0369-76	**A5.00 | $A5FF**	**ROM 0**	960-5015-01
Voice 1	(8M)	965-0370-76	1.00 | $9ABE	U17	960-5016-00
Voice 2	(8M)	965-0371-76	1.00 | $9F34	U21	960-5016-00
Voice 3	(8M)	965-0372-76	1.00 | $374B	U36	960-5016-00
Voice 4	(8M)	965-0373-76	1.00 | $237A	U37	960-5016-00
RollerCoaster Tycoon™ (Notes 4, 5, 7)					
Sound	(512K)	965-0374-78	1.00 | $F663	U7	960-7001-02
Game ROM	(1M)	965-0375-78	**A7.02| $E5FF**	**U210**	960-5009-00
Voice 1	(8M)	965-0377-78	1.00 | $3C4A	U17	960-5016-00
Voice 2	(8M)	965-0378-78	1.00 | $057A	U21	960-5016-00
Voice 3	(8M)	965-0379-78	1.00 | $04D7	U36	960-5016-00
Display	(4M)	965-0376-78	**A7.01 | $8DDB**	**U5** Disp. Cntrlr.	
The Simpsons™ Pinball Party (Notes 4, 5, 7)					
Sound	(512K)	965-0381-77	1.01 | $A7EE	U7	960-7001-02
Game ROM	(1M)	965-0382-77	**A4.00 | $4FFF**	**U210**	960-5009-00
Voice 1	(8M)	965-0383-77	1.00 | $9719	U17	960-5016-00
Voice 2	(8M)	965-0384-77	1.00 | $16ED	U21	960-5016-00
Voice 3	(8M)	965-0385-77	1.00 | $ADCE	U36	960-5016-00
Voice 4	(8M)	965-0386-77	1.00 | $E7E5	U37	960-5016-00
Display	(4M)	965-0387-77	**A4.00 | $8A03**	**U5** DC PCB	960-5015-01
Terminator® 3: Rise of the Machines™ (Notes 4, 5, 7)					
Sound	(512K)	965-0388-79	1.00 | $D2FD	U7	960-7001-02
Game ROM	(1M)	965-0389-79	**A4.00 | $F8FF**	**U210**	960-5009-00
Voice 1	(8M)	965-0390-79	1.00 | $1838	U17	960-5016-00
Voice 2	(8M)	965-0391-79	1.00 | $F0D5	U21	960-5016-00
Voice 3	(8M)	965-0392-79	1.00 | $89DA	U36	960-5016-00
Voice 4	(8M)	965-0393-79	1.00 | $1200	U37	960-5016-00
Display	(4M)	965-0394-79	**A4.00 | $6E49**	**U5** DC PCB	960-5015-01
The Lord of the Rings™ (Notes 7, 8)					
Sound	(512K)	965-0401-80	1.01 | $36BC	U7	960-7001-02
Game ROM	(1M)	965-0402-80	**A10.00 | $84FF**	**U210**	960-5009-00
Voice 1	(8M)	965-0403-80	1.00 | $1792	U17	960-5016-00
Voice 2	(8M)	965-0404-80	1.00 | $67F1	U21	960-5016-00
Voice 3	(8M)	965-0405-80	1.00 | $89B6	U36	960-5016-00
Voice 4	(8M)	965-0406-80	1.00 | $EA49	U37	960-5016-00
Display	(4M)	965-0407-80	**A10.00 | $1669**	**U5** DC PCB	960-5015-01

Sound & Voice 1-4 identical to above H-D® Original.

footnotes : 1 — 8 *see the bottom of the next page (**A2**).*

APPENDIX A

Pinball Game Firmware (White Star Board System* & S.A.M. System** Only) Table

See website for the latest International Code or Updated USA version / checksums

Ripley's Believe It or Not!® (Notes 7, 8)

ROM	Chip Size	Program Part Nº	USA Ver. & Check Sum	Bd. Loc.	Raw Part Nº
Sound	(512K)	965-0408-81	1.00 | $D93D	U7	960-7001-02
Game ROM	(1M)	965-0409-81	**A3.20 | $43FF**	**U210**	960-5009-00
Voice 1	(8M)	965-0410-81	1.00 | $067B	U17	960-5016-00
Voice 2	(8M)	965-0411-81	1.00 | $C8B8	U21	960-5016-00
Voice 3	(8M)	965-0412-81	1.00 | $64C2	U36	960-5016-00
Voice 4	(8M)	965-0413-81	1.00 | $5341	U37	960-5016-00
Display	(4M)	965-0414-81	**A3.00 | $DE4B**	**U5** DC PCB	960-5015-01

Elvis® (Notes 7, 8)

Sound	(512K)	965-0415-84	1.00 | $8CD2	U7	960-7001-02
Game ROM	(1M)	965-0416-84	**A5.00 | $50FF**	**U210**	960-5009-00
Voice 1	(8M)	965-0417-84	1.00 | $538D	U17	960-5016-00
Voice 2	(8M)	965-0418-84	1.00 | $8BCD	U21	960-5016-00
Voice 3	(8M)	965-0419-84	1.00 | $60F8	U36	960-5016-00
Voice 4	(8M)	965-0420-84	1.00 | $14D8	U37	960-5016-00
Display	(4M)	965-0421-84	**A5.00 | $A1F6**	**U5** DC PCB	960-5015-01

The Sopranos℠ (Notes 7, 8)

Sound	(512K)	965-0422-85	4.00 | $9B5A	U7	960-7001-02
Game ROM	(1M)	965-0423-85	**A5.00 | $5BFF**	**U210**	960-5009-00
Voice 1	(8M)	965-0424-85	3.00 | $F01E	U17	960-5016-00
Voice 2	(8M)	965-0425-85	1.04 | $C14C	U21	960-5016-00
Voice 3	(8M)	965-0426-85	1.04 | $47A3	U36	960-5016-00
Voice 4	(8M)	965-0427-85	1.04 | $ADCD	U37	960-5016-00
Display	(4M)	965-0428-85	**A5.00 | $B4BB**	**U5** DC PCB	960-5015-01

NASCAR® (Notes 7, 8)

Sound	(512K)	965-0429-86	2.00 | $32B3	U7	960-7001-02
Game ROM	(1M)	965-0430-86	**A4.50 | $39FF**	**U210**	960-5009-00
Voice 1	(8M)	965-0431-86	2.00 | $CFFB	U17	960-5016-00
Voice 2	(8M)	965-0432-86	2.00 | $22C0	U21	960-5016-00
Voice 3	(8M)	965-0433-86	2.00 | $5FC8	U36	960-5016-00
Voice 4	(8M)	965-0434-86	2.00 | $2902	U37	960-5016-00
Display	(4M)	965-0435-86	**A4.00 | $92BD**	**U5** DC PCB	960-5015-01

Grand Prix (Notes 7, 8)

Sound	(512K)	965-0429-91	V1.00 | $6F89	U7	960-7001-02
Game ROM	(1M)	965-0430-91	**A4.50 | $5EFF**	**U210**	960-5009-00
Voice 1	(8M)	965-0431-91	1.00 | $CE0E	U17	960-5016-00
Voice 2	(8M)	965-0432-91	1.00 | $F4C6	U21	960-5016-00
Voice 3	(8M)	965-0433-91	1.00 | $057D	U36	960-5016-00
Voice 4	(8M)	965-0434-91	1.00 | $2646	U37	960-5016-00
Display	(4M)	965-0435-91	**A4.00 | $DA8E**	**U5** DC PCB	960-5015-01

[NDSE] (Notes 7, 8) *Call for more info if code update required.*

Sound	(512K)	965-0436-97	U7	960-7001-02
Game ROM	(1M)	965-0437-97	**U210**	960-5009-00
Voice 1	(8M)	965-0438-97	U17	960-5016-00
Voice 2	(8M)	965-0439-97	U21	960-5016-00
Voice 3	(8M)	965-0440-97	U36	960-5016-00
Voice 4	(8M)	965-0441-97	U37	960-5016-00
Display	(4M)	965-0442-97	**U5** DC PCB	960-5015-01

**** GAMES BELOW THIS LINE / NEXT COLUMN ARE S.A.M. SYSTEM GAMES**

TO ORDER MEMORY STICK WITH GAME FILES FROM YOUR DISTRIBUTOR, USE SPI PART NUMBER 970-0128-00 & INCLUDE THE GAME NAME / LANGUAGE FILE(S) DESIRED.

World Poker Tour™ Pinball (WPT) (Notes 7, 9)

Boot B-02	(8M)	**965-BOOT-SAM**	**1.04** | $7E62	**U9**	*960-5016-00 unprogrammed*

Memory Stick 128MB (970-0128-00)	**Version**	**System**	**Bin Files:**
English + Spanish	1.12AL	1.17+	WPT0112AL.bin
English Only	1.12A	1.17+	WPT0112A.bin
English + French	1.12AF	1.17+	WPT0112AF.bin
French Only	1.12F	1.17+	WPT0112F.bin
German + French	1.12GF	1.17+	WPT0112GF.bin
German Only	1.12G	1.17+	WPT0112G.bin
English + Italian	1.12AI	1.17+	WPT0112AI.bin
Italian Only	1.12I	1.17+	WPT0112I.bin

NOTE: THE TYPICAL SIZE PER UNZIPPED BIN FILE IS 25MB – 30MB+/–

The Simpsons™ Kooky Carnival Redemption (Note 9)

Boot B-02	(8M)	**965-BOOT-SAM**	**1.04** | $7E62	**U9**	*960-5016-00 unprogrammed*

Memory Stick 128MB (970-0128-00)	**Version**	**Bin Files:**
English Only	1.05	SKC0105.bin
English New Jersey Only	0.09NJ	SKC0090NJ.bin

NOTE: THE TYPICAL SIZE PER UNZIPPED BIN FILE IS 5.5MB +/–

©Disney's Pirates of the Caribbean Pinball (POTC) (Notes 7, 9)

Boot B-02	(8M)	**965-BOOT-SAM**	**1.06** | $2014	**U9**	*960-5016-00 unprogrammed*

Memory Stick 128MB (970-0128-00)	**Version**	**System**	**Bin Files:**
English + Spanish	1.15AS	1.17+	POTC115AS.bin
English + French	1.15AF	1.17+	POTC115AF.bin
German + French	1.15GF	1.17+	POTC115GF.bin
English + Italian	1.15AI	1.17+	POTC115AI.bin

NOTE: THE TYPICAL SIZE PER UNZIPPED BIN FILE IS 25MB – 30MB+/–

Family Guy™ Pinball (FG) (Notes 7, 9)

Boot B-02	(8M)	**965-BOOT-SAM**	**2.09** | $10A3	**U9**	*960-5016-00 unprogrammed*

Memory Stick 128MB (970-0128-00)	**Version**	**System**	**Bin Files:**
English + Spanish	10.00AL	1.23+	FG1000AL.bin
English + French	10.00AF	1.23+	FG1000AF.bin
English + German	10.00AG	1.23+	FG1000GF.bin
English + Italian	10.00AI	1.23+	FG1000AI.bin

NOTE: THE TYPICAL SIZE PER UNZIPPED BIN FILE IS 25MB – 30MB+/–

Spider-Man™ Pinball (S-M) (Notes 7, 9)

Boot B-02	(8M)	**965-BOOT-SAM**	**2.10** | $F625	**U9**	*960-5016-00 unprogrammed*

Memory Stick 128MB (970-0128-00)	**Version**	**System**	**Bin Files:**
English + Spanish	1.3ES	1.27+	spd_1_30_es.bin
English + French	1.3EF	1.27+	spd_1_30_ef.bin
German+French	1.3GF	1.27+	spd_1_30_gf.bin
English + Italian	1.3EI	1.27+	spd_1_30_ei.bin

NOTE: THE TYPICAL SIZE PER UNZIPPED BIN FILE IS 25MB – 30MB+/–

footnotes:

1 ROMs on CPU/Sound Bd.: 520-5136-**00** (Stereo) & Display Cont. Bd.: 520-5055-01
2 ROMs on CPU/Sound Bd.: 520-5136-**10** (Mono) & Display Cont. Bd.: 520-5055-01
3 ROMs on CPU/Sound Board: 520-5136-**15*** (Mono) (*FCC 11-97) & Display Controller Board: 520-5055-**02*** (*FCC 11-97)

APPENDIX A

Pinball Game Firmware Table

EPROM	Chip Size	Program Part Nº	USA Ver.	Bd. Loc.	Raw Part Nº
Laser War					
CPU	(256K)	965-0004-00	LWAR.C5	C5	960-5007-00
Sound (Old)	(256K)	965-0005-00		J5	960-5007-00
Sound (Old)	(256K)	965-0006-00		J6	960-5007-00
Sound (Old)	(256K)	965-0007-00		J7	960-5007-00
			- OR -		
Sound	(256K)	965-0008-00		7F	960-5007-00
Sound 1	(512K)	965-0009-00		6F	960-7001-02
Sound 2	(512K)	965-0010-00		4F	960-7001-02
Secret Service					
CPU	(256K)	965-0011-00	A4-6	B5	960-5007-00
CPU	(256K)	965-0012-00	A4-6	C5	960-5007-00
Voice 1	(512K)	965-0014-00		6F	960-7001-02
Voice 2	(512K)	965-0015-00		4F	960-7001-02
Sound	(256K)	965-0013-00		7F	960-5007-00
Torpedo Alley					
CPU	(256K)	965-0016-00	A2-1	B5	960-5007-00
CPU	(256K)	965-0017-00	A2-1	C5	960-5007-00
Voice 1	(512K)	965-0019-00		6F	960-7001-02
Voice 2	(512K)	965-0020-00		4F	960-7001-02
Sound	(256K)	965-0018-00		7F	960-5007-00
Time Machine					
CPU	(128K)	965-0021-00	A2-4	B5	960-5006-00
CPU	(256K)	965-0022-00	A2-4	C5	960-5007-00
Voice 1	(512K)	965-0024-00		6F	960-7001-02
Voice 2	(512K)	965-0025-00		4F	960-7001-02
Sound	(256K)	965-0023-00		7F	960-5007-00
Playboy 35th Anniversary					
CPU	(256K)	965-0046-00	A2-4	B5	960-5007-00
CPU	(256K)	965-0047-00	A2-4	C5	960-5007-00
Voice 1	(512K)	965-0049-00		6F	960-7001-02
Voice 2	(512K)	965-0050-00		4F	960-7001-02
Sound	(256K)	965-0048-00		7F	960-5007-00
ABC Monday Night Football					
CPU	(128K)	965-0031-00	A2-7	B5	960-5006-00
CPU	(256K)	965-0032-00	A2-7	C5	960-5007-00
Voice 1	(512K)	965-0034-00		6F	960-7001-02
Voice 2	(512K)	965-0035-00		4F	960-7001-02
Sound	(256K)	965-0033-00		7F	960-5007-00
Robocop					
CPU	(256K)	965-0036-00	A3-4	B5	960-5007-00
CPU	(256K)	965-0037-00	A3-4	C5	960-5007-00
Voice 1	(512K)	965-0039-00		6F	960-7001-02
Voice 2	(512K)	965-0040-00		4F	960-7001-02
Sound	(256K)	965-0038-00		7F	960-5007-00
Phantom of the Opera					
CPU	(128K)	965-0026-00	A3-2	B5	960-5006-00
CPU	(256K)	965-0027-00	A3-2	C5	960-5007-00
Voice 1	(512K)	965-0029-00		6F	960-7001-02
Voice 2	(512K)	965-0030-00		4F	960-7001-02
Sound	(256K)	965-0028-00		7F	960-5007-00
Back to the Future					
CPU	(256K)	965-0041-00	A2-0	B5	960-5007-00
CPU	(256K)	965-0042-00	A2-0	C5	960-5007-00
Voice 1	(512K)	965-0044-00		6F	960-7001-02
Voice 2	(512K)	965-0045-00		4F	960-7001-02
Sound	(256K)	965-0043-00		7F	960-5007-00
The Simpsons					
CPU	(128K)	965-0051-00	A2-7	B5	960-5006-00
CPU	(256K)	965-0052-00	A2-7	C5	960-5007-00
Voice 1	(512K)	965-0054-00		6F	960-7001-02
Voice 2	(512K)	965-0055-00		4F	960-7001-02
Sound	(256K)	965-0053-00		7F	960-5007-00
Checkpoint					
CPU	(128K)	965-0056-00	A1-7	B5	960-5006-00
CPU	(256K)	965-0134-00	A1-7	C5	960-5007-00
Voice 1	(1M)	965-0057-00		F7	960-5009-00
Voice 2	(1M)	965-0058-00		F5	960-5009-00
Sound	(256K)	965-0059-00		F4	960-5007-00
Display	(512K)	965-0060-00	CP80	U8	960-7001-02
Teenage Mutant Ninja Turtles					
CPU	(128K)	965-0061-00	A1.04	B5	960-5006-00
CPU	(256K)	965-0062-00	A1.04	C5	960-5007-00
Voice 1	(1M)	965-0063-00		F5/6	960-5009-00
Voice 2	(1M)	965-0064-00		F4/5	960-5009-00
Sound	(256K)	965-0065-00		F7	960-5007-00
Display	(512K)	965-0066-00	A1.04	U8	960-7001-02
Batman					
CPU	(128K)	965-0067-00	A1.06	B5	960-5006-00
CPU	(256K)	965-0135-00	A1.06	C5	960-5007-00
Voice 1	(2M)	965-0068-00		U17	960-5010-00
Voice 2	(1M)	965-0069-00		U21	960-5009-00
Sound	(256K)	965-0070-00		U7	960-5007-00
Display	(1M)	965-0071-00	A1.06	U8	960-5009-00
Star Trek 25th Anniversary					
CPU	(512K)	965-0072-00	A2.01	C5	960-7001-02
Voice 1	(2M)	965-0073-00		U17	960-5010-00
Voice 2	(2M)	965-0074-00		U21	960-5010-00
Sound	(256K)	965-0075-00		U7	960-5007-00
Display	(1M)	965-0076-00	A1.09	U8	960-5009-00
Hook					
CPU	(512K)	965-0077-00	A4.08	C5	960-7001-02
Voice 1	(2M)	965-0078-00		U17	960-5010-00
Voice 2	(2M)	965-0079-00		U21	960-5010-00
Sound	(256K)	965-0080-00		U7	960-5007-00
Display	(1M)	965-0081-00	A4.01	U8	960-5009-00
Lethal Weapon 3					
CPU	(512K)	965-0082-00	A2.08	C5	960-7001-02
Voice 1	(2M)	965-0083-00		U17	960-5010-00
Voice 2	(2M)	965-0084-00		U21	960-5010-00
Sound	(256K)	965-0085-00		U7	960-5007-00
Display	(2M)	965-0086-00	A2.06	ROM 0	960-5010-00
Display	(2M)	965-0087-00	A2.06	ROM 1	960-5010-00
	(Used on Display PCB 520-5055-00)				
			-OR-		
Display	(4M)	965-0087-04	A2.06	ROM 0	960-5015-00
	(Used on Display PCB 520-5055-01)				
Star Wars					
CPU	(512K)	965-0119-00	A1.03	C5	960-7001-02
Voice 0	(4M)	965-0132-00		U17	960-5015-00
Voice 1	(2M)	965-0133-00		U21	960-5010-00
Sound	(256K)	965-0131-00		U7	960-5007-00
Display	(2M)	965-0120-00	A1.04	ROM 0	960-5010-00
Display	(2M)	965-0121-00	A1.04	ROM 1	960-5010-00
	(Used on Display PCB 520-5055-00)				
			-OR-		
Display	(4M)	965-0122-00	A1.05	ROM 0	960-5015-00
	(Used on Display PCB 520-5055-01)				
Rocky & Bullwinkle & Friends					
CPU	(512K)	965-0138-00	A1.30	C5	960-7001-02
Voice 0	(4M)	965-0139-00		U17	960-5015-00
Voice 1	(2M)	965-0140-00		U21	960-5010-00
Sound	(256K)	965-0141-00		U7	960-5007-00
Display	(4M)	965-0142-00	A1.30	ROM 0	960-5015-00
Jurassic Park					
CPU	(512K)	965-0143-00	A5.13	C5	960-7001-02
Voice 0	(4M)	965-0144-00		U17	960-5015-00
Voice 1	(2M)	965-0145-00		U21	960-5010-00
Sound	(256K)	965-0146-00		U7	960-5007-00
Display	(4M)	965-0147-00	A5.10	ROM 0	960-5015-00
Last Action Hero					
CPU	(512K)	965-0148-00	A1.12	C5	960-7001-02
Voice 0	(4M)	965-0149-00		U17	960-5015-00
Voice 1	(2M)	965-0150-00		U21	960-5010-00
Sound	(256K)	965-0151-00		U7	960-5007-00
Display	(4M)	965-0152-00	A1.06	ROM 0	960-5015-00
Tales from the Crypt					
CPU	(512K)	965-0157-00	A3.03	C5	960-7001-02
Voice 0	(4M)	965-0158-00		U17	960-5015-00
Voice 1	(2M)	965-0159-00		U21	960-5010-00
Sound	(256K)	965-0160-00		U7	960-5007-00
Display	(4M)	965-0161-00	A3.01	ROM 0	960-5015-00
The Who's Tommy					
CPU	(512K)	965-0162-00	A4.00	C5	960-7001-02
Voice 1	(4M)	965-0165-00		U17	960-5015-00
Voice 2	(4M)	965-0166-00		U21	960-5015-00
Voice 3	(4M)	965-0167-00		U36	960-5015-00
Voice 4	(4M)	965-0168-00		U37	960-5015-00
Sound	(512K)	965-0164-00		U7	960-7001-02
Display	(4M)	965-0163-00	A4.00	ROM 0	960-5015-00
WWF Royal Rumble					
CPU	(512K)	965-0169-00	A1.06	C5	960-7001-02
Voice 1	(4M)	965-0172-00		U17	960-5015-00
Voice 2	(4M)	965-0173-00		U21	960-5015-00
Voice 3	(4M)	965-0174-00		U36	960-5015-00
Sound	(512K)	965-0171-00		U7	960-7001-02
Display	(4M)	965-0170-00	A1.02	ROM 0	960-5015-00
Guns N' Roses					
CPU	(512K)	965-0175-00	A3.00	C5	960-7001-02
Voice 1	(4M)	965-0178-00		U17	960-5015-00
Voice 2	(4M)	965-0179-00		U21	960-5015-00
Voice 3	(4M)	965-0180-00		U36	960-5015-00
Voice 4	(4M)	965-0181-00		U37	960-5015-00
Sound	(512K)	965-0177-00		U7	960-7001-02
Display	(4M)	965-0176-00	A3.00	ROM 0	960-5015-00
Maverick *					
CPU	(512K)	965-0182-00	A4.04	C5	960-7001-02
Voice 1	(4M)	965-0186-00		U17	960-5015-00
Voice 2	(4M)	965-0187-00		U21	960-5015-00
Voice 3	(4M)	965-0187-01		U36	960-5015-00
Sound	(512K)	965-0185-00		U7	960-7001-02
Display*	(4M)	965-0183-00	A4.01	ROM 0	960-5015-00
Display*	(4M)	965-0184-00	A4.01	ROM 3	960-5015-00
Mary Shelley's Frankenstein *					
CPU	(512K)	965-0188-00	A1.03	C5	960-7001-02
Voice 1	(4M)	965-0192-00		U17	960-5015-00
Voice 2	(4M)	965-0193-00		U21	960-5015-00
Voice 3	(4M)	965-0194-00		U36	960-5015-00
Sound	(512K)	965-0191-00		U7	960-7001-02
Display*	(4M)	965-0189-00	A1.03	ROM 0	960-5015-00
Display*	(4M)	965-0190-00	A1.03	ROM 3	960-5015-00
Baywatch *		(CPU Board 520-5003-04)			
CPU	(512K)	965-0195-00	A4.00	C5	960-7001-02
Voice 1	(4M)	965-0196-00		U17	960-5015-00
Voice 2	(4M)	965-0197-00		U21	960-5015-00
Sound	(512K)	965-0199-00		U7	960-7001-02
Display*	(4M)	965-0200-00	A4.00	ROM 0	960-5015-00
Display*	(4M)	965-0201-00	A4.00	ROM 3	960-5015-00
Batman Forever *		(CPU Board 520-5003-04)			
CPU	(512K)	965-0202-00	A3.02	C5	960-7001-02
Voice 1	(4M)	965-0203-00		U17	960-5015-00
Voice 2	(4M)	965-0204-00		U21	960-5015-00
Sound	(512K)	965-0205-00		U7	960-7001-02
Display*	(4M)	965-0206-00	A3.00	ROM 0	960-5015-00
Display*	(4M)	965-0207-00	A3.00	ROM 3	960-5015-00

* ***Note:*** *Display* ***EPROMS (4M)*** *for* ***Maverick*** *thru* ***Batman Forever*** *require an access time of* ***120 Nsec*** *or faster.*

APPENDIX B

Semi-Conductors / Integrated Circuits (I.C.) / Relays Cross-Reference Table

Table №	Type	Source Number	STERN® PINBALL	N T E®	E C G®	Radio Shack®	R C A®
	RECTIFICATION, BLOCKING, DAMPENING DIODES AND/OR LIGHT EMITTING DIODES (LEDs)						
1	Diode	1N4001	112-5001-00	NTE552	ECG552	- — - — -	SK9000
	Diode	1N4004	112-5003-00	NTE116	ECG116	276-1103	SK3312
	Diode	1N5401	112-0056-00	NTE5801	ECG5801	276-1143	SK9004
	Diode	1N5404	112-5004-00	NTE5804	ECG5804	276-1144	SK9007
	Diode	T6A10L	112-5006-01	NTE5812	ECG5812	- — - — -	- — - — -
	Diode	FR302	112-5009-00	NTE588	ECG588	- — - — -	SK5014
	Diode, Signal	1N914	112-5014-00	- — - — -	- — - — -	- — - — -	- — - — -
	LED	**MT5000UR** or **TLRH180P** (T1-3/4 GaAlAs)	165-5052-00 *(old SPI Part №: 165-5100-00)*	- — - — -	- — - — -	276-066B	- — - — -
	ZENER DIODES						
2	Diode	1N4742A 12v	112-0061-00	NTE142A	ECG142A	276-563	SK12V
	Diode	1N4760B 68v	112-0062-00B	NTE5092A	ECG5092A	- — - — -	SK68V
	Diode	1N4764A 100v	112-0049-00A	NTE5096A	ECG5096A	- — - — -	SK100V
	Diode	1N5228 3.9v	112-0053-00	NTE5007A	ECG5007A	- — - — -	SK3A9
	Diode	1N5234B 6.2v	112-0047-00B	NTE5013A	ECG5013A	276-561	SK6A2
	Diode	1N5379 110v	112-0072-00	NTE5157	ECG5157	- — - — -	SK110X
	Diode	1N6267A 6.8v	112-5011-00	NTE4902	ECG4902	- — - — -	- — - — -
	Diode	1N4752A 33v	112-5010-00A	NTE147A	ECG147A	- — - — -	SK33V
	Diode	1N4736 6.8v 1w	112-5007-00	NTE5071A	ECG5071A	- — - — -	- — - — -
	TRANSISTORS - TYPE FET, NPN, PNP AND/OR SCR						
3	FET Trans.	STP20N10L	110-0106-00	NTE2987	ECG2987	- — - — -	- — - — -
	FET Trans.	STP19N06L	110-0088-00	NTE2985	ECG2985	- — - — -	- — - — -
	FET Trans.	VN02N	110-0089-00	- — - — -	- — - — -	- — - — -	- — - — -
	NPN Trans.	2N4401	110-0073-00	NTE85	ECG85	276-2009	SK3124A
	NPN Trans.	2N6427	110-0070-00	NTE48	ECG48	- — - — -	SK4906
	NPN Trans.	MJE340	110-0071-00	NTE157	ECG157	- — - — -	SK3747
	NPN Trans.	MPSA42	110-0082-00	NTE287	ECG287	- — - — -	SK3232
	NPN Trans.	2N3904	110-0069-00	NTE123AP	ECG123AP	276-2009	- — - — -
	NPN Trans.	TIP122	110-0067-00	NTE261	ECG261	276-2068	SK3896
	NPN Trans.	MJE15030	110-0101-00	NTE375	ECG375	- — - — -	SK9118
	PNP Trans.	2N5401	110-0078-00	NTE288	ECG288	- — - — -	SK3434
	PNP Trans.	MJE15031	110-0103-00	NTE292	ECG292	- — - — -	SK3441
	PNP Trans.	MJE350	110-0072-00	NTE374	ECG374	- — - — -	SK9042
	PNP Trans.	MPSA92	110-0100-00	NTE288	ECG278	- — - — -	SK3434
	PNP Trans.	TIP42	110-0068-00	NTE332	ECG332	- — - — -	SK9236
	PNP Trans.	TIP32C	110-0081-00	NTE292	ECG292	- — - — -	SK3441
	PNP Trans.	TIP36C	110-0077-00	NTE393	ECG393	- — - — -	SK3961
	SCR Trans.	2N5060	110-0074-00	NTE5400	ECG5400	276-1067	SK3950
	SCR Trans.	SCR2800B	110-0083-00	NTE5461-8	ECG5461-8	- — - — -	- — - — -
	BRIDGE RECTIFIERS (BR)			**Comments:**			
4	BR (Present)	DB3501 or CM3501	112-5000-00	For White Star I/O Bds., BR = 35 Amp @ 100v P.I.V.			
	RELAYS			**Comments:**			
5	Relay	FRL-264 D024/02CK	190-5002-00	For PPB, Power Supply, & White Star I/O Boards, Relay = 24v DC 10 Amp DPDT			
	Relay	FRL-264 D006/04CV	190-5001-00	For CPU Boards, Relay = 6v DC 5 Amp 4 Pole DT			

APPENDIX C

Production Start Date, Manual Part Nº, ROM Size & Positions and Jumper W6 Installed Note‡ (White Star Board System & S.A.M. System Only*)

	Game Name White Star Bd. System™	Production Start Date and Manual Part Nr.	CPU/Sound Board **Sound U7 512K** CPU/Sound Board **Game U210 1MB** CPU/Sound Board **Voice ROMS:**				Jumper Installed (‡ see Note)
			U17	U21	U36	U37	
29	Apollo 13 (A13)	NOV 95 780-5044-00	4MB	4MB	4MB	Not Used	n / a
30	Golden Eye	FEB 96 780-5042-00	4MB	4MB	Not Used	Not Used	n / a
31	Twister	APR 96 780-5041-00	4MB	4MB	Not Used	Not Used	n / a
32	ID4: Independence Day	JUL 96 780-5045-00	4MB	4MB	Not Used	Not Used	n / a
33	Space Jam	OCT 96 780-5043-00	4MB	4MB	4MB	Not Used	n / a
34	The Star Wars Trilogy - Sp. Ed.	FEB 97 780-5056-00	4MB	4MB	Not Used	Not Used	n / a
35	The Lost World: Jurassic Park	JUN 97 780-5053-00	4MB	4MB	Not Used	Not Used	n / a
36	The X-Files	AUG 97 780-5046-00	4MB	4MB	Not Used	Not Used	n / a
37	Starship Troopers	NOV 97 780-5059-00	4MB	4MB	4MB	Not Used	n / a
38	Viper Night Drivin'	FEB 98 780-5035-00	4MB	4MB	4MB	4MB	n / a
39	Lost In Space	JUN 98 780-5060-00	4MB	4MB	4MB	4MB	n / a
40	Godzilla	SEP 98 780-5040-00	4MB	4MB	4MB	4MB	n / a
41	South Park	JAN 99 780-5071-00	8MB	8MB	8MB	8MB	W6
42 a	Harley-Davidson®	AUG 99 780-5067-01	8MB	8MB	8MB	8MB	W6
42 b	Harley-Davidson®2nd Ed.	SEP 02 780-5067-10	8MB	8MB	8MB	8MB	W6
42 c	Harley-Davidson® 3rd Ed.	OCT 04 780-5087-00	8MB	8MB	8MB	8MB	W6
43 a	Striker Xtreme	MAR 00 780-5068-01	8MB	8MB	8MB	8MB	W6
43 b	NFL	OCT 00 780-50**73**-00	8MB	8MB	8MB	8MB	W6
44	Sharkey's Shootout	JUL/OCT 00 780-5072-01	8MB	8MB	8MB	Not Used	W6
45	High Roller Casino	JAN 01 780-5065-00	8MB	8MB	8MB	8MB	W6
46	Austin Powers™	MAY 01 780-5074-00	8MB	8MB	8MB	8MB	W6
47	MONOPOLY®	SEP 01 780-5075-00	8MB	8MB	8MB	Not Used	W6
48	Playboy	FEB 02 780-5076-00	8MB	8MB	8MB	8MB	W6
49	RollerCoaster Tycoon™	AUG 02 780-5078-00	8MB	8MB	8MB	Not Used	W6
50	The Simpsons™ Pinball Party	JAN 03 780-5077-00	8MB	8MB	8MB	8MB	W6
51	T3®: Rise of the Machines™	MAY 03 780-5079-00	8MB	8MB	8MB	8MB	W6
52	The Lord of the Rings™	NOV 03 780-5080-00	8MB	8MB	8MB	8MB	
53	Ripley's Believe It or Not!®	APR 04 780-5081-00	8MB	8MB	8MB	8MB	

**** Note:*** *For complete Appendix Information for Games **Laser War** through **Batman Forever**, see any Service Game Manual between **Apollo 13** through **Ripley's Believe It or Not!** or on-line at our website www.sternpinball.com/parts.htm; also available on CD-R, 970-2003-00 (**The Simpsons™ Pinball Party**, **T3®** and **The Lord of the Rings™**).*

‡ *Additional Information for **Installed** Jumper (above games 41-51):*

• *Installed **W6** so 8MB ROMS can be utilized. See the **CPU/Sound Board Schematic** (Sheet 2 of 3, Address Location 3E) in the games' Service Game Manual. Games 52 - 57 CPU/Sound Board differ than <51 (See Appendix D).*

See **Apdx. A** for more detailed information on **Pinball Game Firmware** *(ROM Name, Size, Part Numbers, USA Version & Checksum and Board Locations).*

	Game Name White Star Board System™	Production Start Date and Manual Part Nr.	CPU/Sound Board **Sound U7 512K** CPU/Sound Board **Game U210 1MB** CPU/Sound Board **Voice ROMS:**			
			U17	U21	U36	U37
54	Elvis®	AUG 04 780-5084-00	8MB	8MB	8MB	8MB
55	The Sopranos℠	FEB 05 780-5085-00	8MB	8MB	8MB	8MB
56	NASCAR®	JUL 05 780-5086-00	8MB	8MB	8MB	8MB
57	Grand Prix	SEP 05 780-5091-00	8MB	8MB	8MB	8MB

See **Apdx. A** for more detailed information on **Pinball Game Firmware** *(ROM Name, Size, Part Numbers, USA Version & Checksum and Board Locations).*

	Game Name S.A.M. System	Production Start Date and Manual Part Nr.	S.A.M. System CPU/Sound Board Boot EPROM **U9** 965-BOOT-SAM *(Programmed)*			
58	World Poker Tour™ (WPT)	JUN 06 780-5088-00	8MB	B-02 V2.1+	chksum $F625	LOC: U9
59	The Simpsons™ Kooky Carnival	APR 06 780-5090-00	8MB	B-02 V2.1+	chksum $F625	LOC: U9
60	©Disney's Pirates of the Caribbean	AUG 06 780-5092-00	8MB	B-02 V2.1+	chksum $F625	LOC: U9
61	Famil Guy™	DEC 06 780-5093-00	8MB	B-02 V2.1+	chksum $F625	LOC: U9
62	Spider-Man™	MAY 07 780-5094-00	8MB	B-02 V2.1+	chksum $F625	LOC: U9

Games 58 – current, S.A.M. System : CPU/Sound & I/O Power Driver PCBs differ than White Star *(previous Games 29 – 57)*; Disp. Controller Not Required.

APPENDIX D

Board Type (White Star Board System* Only) Table

Game Name	Flipper	I/O Power Driver	CPU/Sound Stereo	Disp. Power Supply	Dot Matrix Display	Display Controller	OPTO Transmitter	OPTO Receiver	OPTO Application
Apollo 13	520-5080-00 2-Flipper	520-5137-00	520-5136-00	520-5138-00	520-5052-00 128 X 32 Dots	520-5055-01	520-5124-00 Single OPTO	520-5125-00 Single OPTO	5-Ball Trough over Up-Kicker
	Miscellaneous PC Boards:	Light Boards 520-5130-01, -04 & -05 Magnet Interface, 7-Segment Display & Light Bd. 520-5130-06 Magnet Driver Board 520-5130-02 Switch Membrane Board 520-5130-03				Relay Board 520-5010-00			
Golden Eye	520-5080-00 2-Flipper	520-5137-00	520-5136-00	520-5138-00	520-5052-00 128 X 32 Dots	520-5055-01	520-5124-00 Single OPTO	520-5125-00 Single OPTO	5-Ball Trough over Up-Kicker
	Miscellaneous PC Boards:	Light Boards 520-5128-05 through -08		Mag. Processor X2 Driver Bd. 520-5143-00		Relay Board 520-5010-00			

GAMES HEREON NO LONGER REQUIRE THE FLIPPER BOARD WITH THE WHITE STAR BOARD SYSTEM™

Game Name	I/O Power Driver	CPU/Sound Mono	Disp. Power Supply	Dot Matrix Display	Display Controller	OPTO Transmitter	OPTO Receiver	OPTO Application	Misc OPTO & App.
Twister	520-5137-01	520-5136-10	520-5138-00	520-5052-00 128 X 32 Dots	520-5055-01	520-5124-00 Single OPTO	520-5125-00 Single OPTO	5-Ball Trough over Up-Kicker	
	Miscellaneous PC Boards:	Light Boards 520-5145-01 through -07		Mag. Drv. Bd. 520-5143-00	Relay Board 520-5010-00				
Independence Day (ID4)	520-5137-01	520-5136-10	520-5138-00	520-5052-00 128 X 32 Dots	520-5055-01	520-5124-00 Single OPTO	520-5125-00 Single OPTO	4-Ball Trough over Up-Kicker	
	Miscellaneous PC Boards:	Light Boards 520-5149-01 through -10		Servo Mtr. Bd. 520-5152-00		520-5082-00 Long Hop OPTO	520-5083-00 Long Hop OPTO	Alien Head Enter	
Space Jam	520-5137-01	520-5136-10	520-5138-00	520-5052-00 128 X 32 Dots	520-5055-01	520-5124-00 Single OPTO	520-5125-00 Single OPTO	5-Ball Trough over Up-Kicker	
	Miscellaneous PC Boards:	2X 7-Segment Display Board 520-5153-00							
The Star Wars Trilolgy - Special Ed.	520-5137-01	520-5136-10	520-5138-00	520-5052-00 128 X 32 Dots	520-5055-01	520-5124-00 Single OPTO	520-5125-00 Single OPTO	4-Ball Trough over Up-Kicker	
	Miscellaneous PC Boards:	Relay Board 520-5010-00							
The Lost World: J.P.	520-5137-01	520-5136-10	520-5138-00	520-5052-00 128 X 32 Dots	520-5055-01	520-5124-00 Single OPTO	520-5125-00 Single OPTO	4-Ball Trough over Up-Kicker	520-5162-00 2-Pos. Motor Sensor on Snagger Motor
	MiscellaneousPC Boards:	DC Relay Bd. 520-5066-00	Shaker Mtr. Bd. 520-5065-00						
The X-Files	520-5137-01	520-5136-10	520-5138-00	520-5052-00 128 X 32 Dots	520-5055-01	520-5124-00 Single OPTO	520-5125-00 Single OPTO	4-Ball Trough over Up-Kicker	520-5155-00 3-Pos. Motor Sensor on File Cab. Motor
	Miscellaneous PC Boards:					520-5082-00 Long Hop OPTO	520-5083-00 Long Hop OPTO	File Cabinet Enter	
Starship Troopers	520-5137-01	520-5136-15	520-5138-00	520-5052-00 128 X 32 Dots	520-5055-02	520-5124-00 Single OPTO	520-5125-00 Single OPTO	4-Ball Trough over Up-Kicker	
	Miscellaneous PC Boards:	4X 7-Segment Display Board 520-5166-00				520-5082-00 Long Hop OPTO	520-5083-01 Long Hop OPTO	L/R Orbit Lane Enter	
Viper Night Drivin'	520-5137-01	520-5136-16	520-5138-00	520-5052-00 128 X 32 Dots	520-5055-03	520-5124-00 Single OPTO	520-5125-00 Single OPTO	4-Ball Trough over Up-Kicker	
	Miscellaneous PC Boards:	Relay Board 520-5010-00				520-5082-00 Long Hop OPTO	520-5083-01 Long Hop OPTO	Jump Ramp	
Lost In Space	520-5137-01	520-5136-16	520-5138-00	520-5052-00 128 X 32 Dots	520-5055-03	515-0173-00 Dual OPTO	515-0174-00 Dual OPTO	4-Ball Trough over Up-Kicker	
	Miscellaneous PC Boards:	Relay Board 520-5010-00							
Godzilla	520-5137-01	520-5136-16	520-5138-00	520-5052-00 128 X 32 Dots	520-5055-03	515-0173-00 Dual OPTO	515-0174-00 Dual OPTO	4-Ball Trough over Up-Kicker	
	Miscellaneous PC Boards:	Shaker Mtr. Bd. 520-5065-00							
South Park	520-5137-01	520-5136-16	520-5138-00	520-5052-00 128 X 32 Dots	520-5055-03	515-0173-00 Dual OPTO	515-0174-00 Dual OPTO	5-Ball Trough over Up-Kicker	
	Miscellaneous PC Boards:					520-5082-00 Long Hop OPTO	520-5083-01 Long Hop OPTO	Kenny Under Trough Enter	
Harley-Davidson® 1st-3rd* Editions	520-5137-01	520-5136-16 *520-5300-00*	520-5138-00	520-5052-00 128 X 32 Dots	520-5055-03	515-0173-00 Dual OPTO	515-0174-00 Dual OPTO	4-Ball Trough over Up-Kicker	
	Miscellaneous PC Boards:	Relay Board 520-5010-00	Shaker Mtr. Bd. 520-5065-00	Diode Board 520-5146-00		520-5082-00 Long Hop OPTO	520-5083-01 Long Hop OPTO	Motorcycle Enter	
Striker Xtreme (NFL)	520-5137-01	520-5136-16	520-5138-00	520-5052-00 128 X 32 Dots	520-5055-03	515-0173-00 Dual OPTO	515-0174-00 Dual OPTO	4-Ball Trough over Up-Kicker	520-5155-00 3-Pos. Motor Sensor on Goalie Motor
	Miscellaneous PC Boards:	DC Relay Bd. 520-5066-00	Relay Board 520-5010-00	Diode Board 520-5146-00	for UK ONLY> Solenoid Expander Bd. 520-5192-00	520-5082-00 Long Hop OPTO	520-5083-01 Long Hop OPTO	Goalie Under-Trough Enter	
Sharkey's Shootout	520-5137-64	520-5136-64	520-5138-00	520-5052-00 128 X 32 Dots	520-5055-03	515-0173-00 Dual OPTO	515-0174-00 Dual OPTO	4-Ball Trough over Up-Kicker	520-5194-00 4-Pos. Motor Sensor on ?-Ball Motor
	MiscellaneousPC Boards:	Relay Board 520-5010-00	Sol. Exp. Bd. 520-5192-00						
High Roller Casino	520-5137-01	520-5136-16	520-5138-00	520-5052-00 128 X 32 Dots	520-5055-03	515-0173-00 Dual OPTO	515-0174-00 Dual OPTO	4-Ball Trough over Up-Kicker	520-5194-00 4-Pos. Motor Sensor on Roulette Wheel Motor
						520-5082-00 Long Hop OPTO	520-5083-01 Long Hop OPTO	Ball Lock under Roulette	
	Miscellaneous PC Boards:	Dot Display (5X7) in Slot Mach. 520-5197-00			for UK ONLY> Solenoid Expander Bd. 520-5192-00	520-5196-00 3-Pos. OPTO	520-5195-00 3-Pos. OPTO	Up/Dn Ramp in Slot Mach.	
Austin Powers™	520-5137-01	520-5136-16	520-5138-00	520-5052-00 128 X 32 Dots	520-5055-03	515-0173-00 Dual OPTO	515-0174-00 Dual OPTO	4-Ball Trough over Up-Kicker	520-5212-00 Pulse-Stretcher OPTO on Spini-Me
	MiscellaneousPC Boards:	Relay Bd. (X3) 520-5010-00			for UK ONLY> Solenoid Expander Bd. 520-5192-00	520-5082-00 Long Hop OPTO	520-5083-01 Long Hop OPTO	Time Machine Ramp	
MONOPOLY®	520-5137-01	520-5136-16	520-5138-00	520-5052-00 128 X 32 Dots	520-5055-03	515-0173-00 Dual OPTO	515-0174-00 Dual OPTO	4-Ball Trough over Up-Kicker	
	MiscellaneousPC Boards:	DC Relay Bd. 520-5066-00	Mini-Dot Display (3 by 5X7) 520-5197-00 (Electric C° Sign)		for UK ONLY> Solenoid Expander Bd. 520-5192-00	520-5218-00 4-Pos. OPTO	520-5210-00 4-Pos. OPTO	Bank Door	

Table continued on the next page.

APPENDIX D

Board Type (White Star Board System* & S.A.M. System** Only) Table

Game Name	I/O Power Driver	CPU/Sound (old & new)	Disp. Power Supply	Dot Matrix Display	Display Controller	OPTO Transmitter	OPTO Receiver	OPTO Application	Misc OPTO & App.
Playboy	520-5137-01	520-5136-16	520-5138-00	520-5052-00 128 X 32 Dots	520-5055-03	515-0173-00 Dual OPTO	515-0174-00 Dual OPTO	4-Ball Trough over Up-Kicker	
	Miscellaneous PC Boards:	DC Relay Bd. 520-5066-00	Relay Bd. 520-5010-00		for UK ONLY> Solenoid Expander Bd. 520-5192-00				
RollerCoaster Tycoon™	520-5137-01	520-5136-16	520-5138-00	520-5052-00 128 X 32 Dots	520-5055-03	515-0173-00 Dual OPTO	515-0174-00 Dual OPTO	4-Ball Trough over Up-Kicker	520-5222-00 1-Position Switch Detect on Wheel Spin
	Miscellaneous PC Boards:	DC Relay Bd. 520-5066-00	Mini-Dot Display (3 by 5X7) 520-5221-00 (Ramp Enter Sign)		for UK ONLY> Solenoid Expander Bd. 520-5192-00	520-5082-00 Long Hop OPTO	520-5083-01 Long Hop OPTO	Behind 1-Bank Drop Target	
The Simpsons™ Pinball Party	520-5137-01	520-5136-16	520-5138-00	520-5052-00 128 X 32 Dots	520-5055-03	515-0173-00 Dual OPTO	515-0174-00 Dual OPTO	4-Ball Trough over Up-Kicker	
	Miscellaneous PC Boards:	LED Bd. 520-5219-00	Color Dot Display (4 by 5X7) 520-5225-00 (TV Set)		for UK ONLY ◀◀◀ Aux. Driver Bd. 520-5068-01				
Terminator® 3: Rise of the Machines™	520-5137-01	**520-5136-16**	520-5138-00	520-5052-00 128 X 32 Dots	520-5055-03	515-0173-00 Dual OPTO	515-0174-00 Dual OPTO	4-Ball Trough over Up-Kicker	
	Miscellaneous PC Boards:				for UK ONLY ◀◀◀ Aux. Driver Bd. 520-5068-01	515-7307-00 Single OPTO	515-7308-00 Single OPTO	TXCannon Trough	
The Lord of the Rings™	520-5137-01	***New* 520-5300-00**	520-5138-00	520-5052-00 128 X 32 Dots	520-5055-03	515-0173-00 Dual OPTO	515-0174-00 Dual OPTO	4-Ball Trough over Up-Kicker	500-6746-00 (White Trans.) 500-6747-00 (Black Rec.)
	Miscellaneous PC Boards:	19-LED PCB 520-5242-00	OPTO Transmitter / Receiver Amplifier PCB 520-5239-00		for UK ONLY ◀◀◀ Aux. Driver Bd. 520-5068-01	515-7307-00 Single OPTO	515-7308-00 Single OPTO	Orthanc Tower Trough	
Ripley's Believe It or Not!®	520-5137-01	520-5300-00	520-5138-00	520-5052-00 128 X 32 Dots	520-5055-03	515-0173-00 Dual OPTO	515-0174-00 Dual OPTO	4-Ball Trough over Up-Kicker	500-6775-00 OPTO Trnscvr
	Miscellaneous PC Boards:	520-5236-00 X3 Dot Display	OPTO Transmitter / Receiver Amplifier PCB 520-5239-01		for UK ONLY ◀◀◀ Aux. Driver Bd. 520-5068-01	520-5234-00 3-Pos. OPTO	520-5234-00 3-Pos. OPTO	Vari-Target	520-5235-03 X3 Aux. Drvr
Elvis®	520-5137-01	520-5300-00	520-5138-00	520-5052-00 128 X 32 Dots	520-5055-03	515-0173-00 Dual OPTO	515-0174-00 Dual OPTO	4-Ball Trough over Up-Kicker	
	Miscellaneous PC Boards:				for UK ONLY ◀◀◀ Aux. Driver Bd. 520-5068-01				
The Sopranos℠	520-5137-01	520-5300-00	520-5138-00	520-5052-00 128 X 32 Dots	520-5055-03	515-0173-00 Dual OPTO	515-0174-00 Dual OPTO	4-Ball Trough over Up-Kicker	
	Miscellaneous PC Boards:				for UK ONLY ◀◀◀ Aux. Driver Bd. 520-5068-01				
NASCAR® and [NDSE]	520-5137-01	520-5300-00	520-5138-00	520-5052-00 128 X 32 Dots	520-5055-03	515-0173-00 Dual OPTO	515-0174-00 Dual OPTO	4-Ball Trough over Up-Kicker	500-6775-00 OPTO Trans. (Qty. 16) Switch Detect.
	Miscellaneous PC Boards:	520-5235-03 X3 Aux. Drvr	OPTO Transmitter / Receiver Amplifier PCB 520-5239-01		for UK ONLY ◀◀◀ Aux. Driver Bd. 520-5068-01				
Grand Prix	520-5137-01	520-5300-00	520-5138-00	520-5052-00 128 X 32 Dots	520-5055-03	515-0173-00 Dual OPTO	515-0174-00 Dual OPTO	4-Ball Trough over Up-Kicker	500-6775-00 OPTO Trans. (Qty. 16) Switch Detect.
	Miscellaneous PC Boards:	520-5235-03 X3 Aux. Drvr	OPTO Transmitter / Receiver Amplifier PCB 520-5239-01		for UK ONLY ◀◀◀ Aux. Driver Bd. 520-5068-01				

Game Name	I/O Power Driver**	CPU / Sound**	Disp. Power Supply	Dot Matrix Display	Dual OPTO Transmitter	Dual OPTO Receiver	Dual OPTO Transceiver	OPTO Transceiver Miscellaneous
World Poker Tour™ (WPT)	**520-5249-00** Backbox	**520-5246-00** Backbox	520-5138-00 Backbox	520-5052-00 128 X 32 Dots	515-0173-00 4-Ball Trough	515-0174-00 4-Ball Trough	500-6775-00 4 Switch Pairs (Qty. 8)	520-5251-00 'U' 1/per PCB Jail Bars Up Ace/Hole Mech
	Miscellaneous **PCBs :**	520-5254-00 50V Step-Up Drv	520-5250-14 14LED 5X7 Disp.	520-5239-01 OPTO Amplifier	520-5247-00 Ace/Hole Mech	520-5248-00 Ace/Hole Mech		520-5252-04 'U' 4/per PCB Drop Targets 4- & 8- Banks
The Simpsons™ Kooky Carnival	**520-5249-00** Back Door	**520-5246-00** Back Door	520-5138-00 Cabinet Rear	520-5052-00 128 X 32 Dots			**520-5253-00-ASY** Coin Drop (Qty. 11)	
	Miscellaneous **PCBs :**	515-5742-00 Shaker PCB	500-6700-00 Relay *(incl. Wiring + Conn.)*					
©Disney's Pirates of the Caribbean	**520-5249-00** Backbox	**520-5246-00** Backbox	520-5138-00 Backbox	520-5052-00 128 X 32 Dots	515-0173-00 4-Ball Trough	515-0174-00 4-Ball Trough	500-6775-00 5 Switch Pairs (Qty. 10)	
	Miscellaneous **PCBs :**	520-5239-01 OPTO Amp. (X3)	511-5024-03 Relay *(incl. Wiring + Conn.)*					
		520-5238-00 : H-E-A-R-T LED PCB						
Family Guy™	**520-5249-00** Backbox	**520-5246-00** Backbox	520-5138-00 Backbox	520-5052-00 128 X 32 Dots	515-0173-00 4-Ball Trough	515-0174-00 4-Ball Trough	500-6775-00 3 Switch Pairs (Qty. 6)	520-5252-01 'U' 1/per PCB Drop Target 1-Bank
	Miscellaneous **PCBs :**	520-5239-01 OPTO Amp. (X2)	520-5261-00 Stepper Motor	511-5042-01 Trgt. Sensor (X2)			500-6775-01 1 Switch Pair (Qty. 2)	520-5252-04 'U' 4/per PCB Drop Target 4-Bank
		511-5046-00 : Mini Playfield Lamp PCB						
Spider-Man™	**520-5249-00** Backbox	**520-5246-00** Backbox	520-5138-00 Backbox	520-5052-00 128 X 32 Dots	515-0173-00 4-Ball Trough	515-0174-00 4-Ball Trough	500-6775-00 3 Switch Pairs (Qty. 6)	
	Miscellaneous **PCBs :**	520-5239-01 OPTO Amp. (X2)						

APPENDIX D

Board Type Table

Game Name	Flipper	Sound	Power Supply	Display X-Digit
• Laser War	2-Flipper **Board Not Required**	***initial:*** 520-5002-00 ***replaced with:*** 520-5002-02 *520-5002-01 was not used.*	520-5000-00	Master: 520-5004-00 plus: 520-5005-00 (Qty. 2): 7 Digit Alpha/Numeric 520-5006-00 (Qty. 2): 7 Digit Numeric 520-5007-00 (Qty. 1): 4 Digit Numeric
• Secret Service • Torpedo Alley	3-Flipper **Board Not Required**	520-5002-02		520-5014-01 7 Digit Alpha/Numeric Combined
• Time Machine	2-Flipper **Board Not Required**			
• Playboy 35th Anniversary *	520-5033-00 2-Flipper *(*only for 100 games of Playboy 35th Anniv. & ABC Mon. Night Football)*			520-5030-00 16 Digit Alpha/Numeric Combined
• ABC Monday Night Football * • *Robocop* • *Phantom of the Opera* • *Back to the Future*				
• The Simpsons		520-5002-**03**		

Game Name	Flipper	Sound	Power Supply	Dot Matrix Display	Display Controller	OPTO Transmitter	OPTO Receiver	OPTO Apllication
• Checkpoint • Teenage Mutant Ninja Turtles	520-5033-00 2-Flipper	520-5002-03	520-5047-00	520-5042-00 128 X 16				
• Batman • Star Trek 25th Anniv. • Hook		520-5050-01						
• Lethal Weapon 3			520-5047-01	520-5052-00 128 X 32	520-5055-00			
• Star Wars • Rocky & Bull-winkle & Friends		520-5050-02						
• Jurassic Park	520-5076-00 3-Flipper		520-5047-02					
• Last Action Hero	520-5070-00 2-Flipper	520-5050-03						
• Tales from the Crypt	520-5076-00 3-Flipper				520-5055-01			
• The Who's Tommy		520-5077-00						
• WWF Royal Rumble	**520-5070 / 5080 -00** 4-Flipper (2X2)							
• Guns N' Roses	520-5076-00 3-Flipper							
• Maverick		520-5050-03	520-5047-03	520-5075-00 192 X 64	520-5092-01	520-5102-00 Single OPTO	520-5103-00 Single OPTO	Paddle Boat Wheel Enter
• Mary Shelley's Frankenstein	520-5076-00 3-Flipper	520-5077-00						
• Baywatch	**520-5070 / 5080 -00** 4-Flipper (2X2)	520-5126-02				520-5124-00 Single OPTO	520-5125-00 Single OPTO	5-Ball Trough over Up-Kicker
• Batman Forever	520-5076-00 3-Flipper					520-5124-00 Single OPTO	520-5125-00 Single OPTO	4-Ball Trough over Up-Kicker

Miscellaneous Boards (Lamp Boards & Relay Boards) not listed above can be found in each individual game manual.

APPENDIX E

Flipper Coil (White Star Board System* & S.A.M. System** Only) Table

Typical Coil Diode 1N4004 unless noted otherwise (Diode Top = above lugs next to windings; Diode Below (Bottom) = under lugs opposite of windings).

STANDARD COILS (TYPICAL APPLICATIONS)			
Ga.-Turn	**Res (Ω)**	**SPI Part Number and Comments**	
20-400	1.0 Ω	090-5021-*use* :	**-00** Diode Top
22-500	1.7 Ω	090-5017-*use* :	-00 Diode Top
22-600	2.2 Ω	090-5017-*use* :	-0B Diode Below // **-0T** Diode Top
23-700	3.1 Ω	090-5022-*use* :	-0B Diode Below // **-0T** Diode Top
23-750	3.4 Ω	090-5019-*use* :	-00 Diode Top
23-800	3.6 Ω	090-5001-*use* :	-0B Diode Below // **-0T** Diode Top // **-NL** No Lugs 11" Leads // **-ND** No Diode
23-840	4.0 Ω	090-5005-*use* :	-00 Diode Top
23.5-765	3.6 Ω	090-5037-*use* :	-03 Diode Top
24-900	5.0 Ω	090-5002-*use* :	-02 Diode Top // **-10** No Lugs 14" Leads
24-940	5.5 Ω	090-5036-*use* :	-0B Diode Below // **-0T** Diode Top *use* **090-5051-01** No Lugs 11" Leads
25-1240	9.3 Ω	090-5034-*use* :	-00 Diode Below
26-1200	10.3 Ω	090-5044-*use* :	-0B Diode Below // **-0T** Diode Top // **-NL** No Lugs 11" Leads // **-ND** No Diode
27-1300	14.2 Ω	090-5003-*use* :	-0T Diode Top
27-1400	14.7 Ω	090-5015-*use* :	-00 Diode Below
27-1400		**511-5031-00**	*Special App.: No Diode / Lugs + Conn.*
27-1500	16.3 Ω	090-5004-*use* :	-0B Diode Below // **-0T** Diode Top
29-2000	33.6 Ω	090-5016-*use* :	-00 Diode Top
LARGE, MEDIUM & MINI COILS (MAGNET APPLICATIONS)			
20.5-480	2.9 Ω	090-5064-*use* :	-02 No Lugs *or* Core; 14" Leads // Large
22-650	4.3 Ω	090-5042-*use* :	-00 No Lugs *or* Core; 6" Leads // Large **-01** No Lugs *or* Core; 12" Leads // Large
24-780	8.0 Ω	090-5061-*use* :	-00 No Lugs *or* Core; 6" Lds. // Medium
29-1000	15.2 Ω	090-5059-*use* :	-00 Lugs + Diode + Magnet Core // Mini
31-1500	52.0 Ω	090-5054-00 : 090-5055-00 :	Straight Lugs + Diode + Mag Core // Mini 90° Lugs + Diode + Magnet Core // Mini

LARGE COILS (FLIPPERS & SPECIAL APPLICATIONS)			
Ga.-Turn	**Res (Ω)**	**SPI Part Number and Comments**	
21-900	*call* Ω	090-5020-*use* :	**-01** 3-Lugs + 1N4004 & 1N5404 Diodes **-10** Diode Top <BROWN><RED>
22-750 / 30-2600	2.6 Ω 92.0 Ω	090-5011-*use* :	**-00 DUAL WND COIL** // 3-Lugs Diode x2
22-900	3.45 Ω	090-5020-*use* :	-20T Diode Top <YELLOW> // **-20-ND** No Diode
22-1080	4.2 Ω	090-5032-*use* :	-0B D. Below // **-0T** D. Top <YEL-GRN> **-NL** No Diode
23-620 / 30-2600	2.4 Ω 75.0 Ω	090-5006-*use* :	-00 **DUAL WND COIL** // 3-Lugs Diode x2
23-700 / 30-2600	3.0 Ω 83.5 Ω	090-5013-*use* :	-00 **DUAL WOUND COIL** // Diode Top
23-800 / 30-2600	2.4 Ω 90.5 Ω	090-5012-*use* :	-00 **DUAL WOUND COIL** // Diode Top
23-900	4.05 Ω	090-5020-*use* :	-30 Diode Top <GREEN>
23-1100	5.1 Ω	090-5030-*use* :	-0T Diode Top <ORANGE> **-ND** No Diode
23-1200	7.1 Ω	090-5008-*use* :	-00 Diode Top <BLACK>
23-1500	4.4 Ω	090-5062-*use* :	-00 Diode Top <BLUE>
24-1570	9.5 Ω	090-5025-*use* :	-00 Diode Top <BLUE>
25-1400	*call* Ω	090-5067-*use* :	-0T Diode Top <RED>
25-1600	*call* Ω	090-5068-*use* :	-0T Diode Top <WHITE>
25-1800	13.8 Ω	090-5041-*use* :	-0T Diode Top <BLUE-GREEN>
MINI COILS (RESET / TRIP APPLICATIONS)			
27-950	*call* Ω	090-5046-*use* :	-01 Diode Top
28-1050	11.5 Ω	090-5046-*use* :	-00 Diode Top
27-880	*call* Ω	500-6976-01	No Lugs *or* Diode + 6" Leads & Conn.
31-590	*call* Ω	090-5010-*use* :	-00 Diode Top
32-1250	35.0 Ω	**515-6916-01 :**	*includes Flap & Screw* <YELLOW>
32-1800	50.2 Ω	090-5031-*use* : (515-6110-00)	-0B Diode Below // **-0T** Diode Top *use 515-# to include mounting & armature brackets*
33-1590	59.0 Ω	**515-6916-00 :**	*includes brackets* <WHITE>

Please Note: *Ohm values may vary **+ / – .03** depending on meter calibration.*

Ordering Note: *Coils typically should not come with Coil Sleeves.* ***IF A SLEEVE EXISTS****, ensure it is the correct sleeve for the application usage. For the correct Coil Sleeve, refer to the Game Assembly Drawing the coil exists on and order separately.*

Flipper Coil (White Star Board System* Only) Table

GAME NAME	Nº of Flippers	FLIPPERS SPI Nº / GAUGE-TURNS / Color		FLIPPERS no E.O.S. Switch SPI Nº / GAUGE-TURNS / Color	
		LOWER LEFT	LOWER RIGHT	UPPER LEFT	UPPER RIGHT
**** Note:*** *For complete Appendix Information for Games **Laser War** through **Batman Forever**, see any Service Game Manual between **Apollo 13** through **Ripley's Believe It or Not!**; or order CD-R, 970-2003-00 (**The Simpsons™ Pinball Party, Terminator® 3** and **The Lord of the Rings™**).*					
Apollo 13	2	090-5032-0T **22-1080 -YEL-GRN-**	SAME	Not Used	Not Used
Golden Eye	2	090-5032-0T **22-1080 -YEL-GRN-**	SAME	Not Used	Not Used
Twister	2	090-5020-20T **22-900 -YELLOW-**	090-5032-0T **22-1080 -YEL-GRN-**	Not Used	Not Used
ID4: Independence Day	3	090-5032-0T **22-1080 -YEL-GRN-**	SAME	Not Used	090-5020-30 **23-900 -GREEN-**
Space Jam †	2	090-5032-0T **22-1080 -YEL-GRN-**	090-5020-20T **22-900 -YELLOW-**	Not Used	Not Used
The Star Wars Trilogy - Special Edition †	2	090-5032-0T **22-1080 -YEL-GRN-**	SAME	Not Used	Not Used
The Lost World: Jurassic Park †	2	090-5032-0T **22-1080 -YEL-GRN-**	SAME	Not Used	Not Used
The X-Files †	2	090-5032-0T **22-1080 -YEL-GRN-**	SAME	Not Used	Not Used
Starship Troopers †	3	090-5030-0T **23-1100 -ORANGE-**	SAME	Not Used	090-5032-0T **22-1080 -YEL-GRN-**
Viper Night Drivin' †	2	090-5030-0T **23-1100 -ORANGE-**	SAME	Not Used	Not Used
Lost In Space †	2	090-5030-0T **23-1100 -ORANGE-**	090-5032-0T **22-1080 -YEL-GRN-**	Not Used	Not Used
Godzilla †	2	090-5032-0T **22-1080 -YEL-GRN-**	SAME	Not Used	Not Used
South Park †	2	090-5030-0T **23-1100 -ORANGE-**	SAME	Not Used	Not Used

† Coil Part Numbers ending with a "**T**" signifies the Diode is on the top of the lug *(on the coil-winding side)*;
Coil Part Numbers ending with a "**B**" signifies the Diode is on the bottom of the lugs.

Table continued on the next page.

APPENDIX E

Flipper Coil (White Star Board System* & S.A.M. System** Only) Table

GAME NAME	№ of Flippers	FLIPPERS w/E.O.S. Switch		FLIPPERS no E.O.S. Switch	
		SPI № / GAUGE-TURNS / Color		SPI № / GAUGE-TURNS / Color	
		LOWER LEFT	LOWER RIGHT	UPPER LEFT	UPPER RIGHT
Harley-Davidson® † *and 1st through 3rd Editions*	2	090-5032-0T **22-1080 -YEL-GRN-**	090-5030-0T **23-1100 -ORANGE-**	Not Used	Not Used
Striker Xtreme (NFL) †	3	090-5032-0T **22-1080 -YEL-GRN-**	090-5030-0T **23-1100 -ORANGE-**	090-5030-0T **23-1100 -ORANGE-**	Not Used
Sharkey's Shootout †	3	090-5030-0T **23-1100 -ORANGE-**	SAME	090-5030-0T **23-1100 -ORANGE-**	Not Used
High Roller Casino †	2	090-5020-20T **22-900 -YELLOW-**	090-5032-0T **22-1080 -YEL-GRN-**	Not Used	Not Used
Austin Powers™ †	2	090-5020-30 **23-900 -GREEN-**	090-5030-0T **23-1100 -ORANGE-**	Not Used	Not Used
MONOPOLY® †	3	090-5032-0T **22-1080 -YEL-GRN-**	SAME	Not Used	090-5062-0T **23-1500 -BLUE-**
Playboy †	2	090-5030-0T **23-1100 -ORANGE-**	SAME	Not Used	Not Used
RollerCoaster Tycoon™ †	4	090-5032-0T **22-1080 -YEL-GRN-**	SAME	090-5067-0T **25-1400 -RED-**	090-5068-0T **25-1600 -WHITE-**
The Simpsons™ Pinball Party †	6** (5 with Flipper Bats)	090-5032-0T **22-1080 -YEL-GRN-**	SAME	Not Used	090-5030-0T **23-1100 -ORANGE-**
		** *The Homer Head Assembly is affixed to an Upr. Rt. Style Flipper (no E.O.S. Switch):*		Flippers (Mini-Bats) on 2nd Level Playfield:	
			** 090-5020-20T **22-900 -YELLOW-**	090-5041-00T **25-1800 -BLU-GRN-**	090-5025-00 **24-1570 -BLUE-**
Terminator® 3: Rise of the Machines™ †	2	090-5032-0T **22-1080 -YEL-GRN-**	SAME	Not Used	Not Used
The Lord of the Rings™ †	2	090-5020-20T **22-900 -YELLOW-**	SAME	Not Used	Not Used
Ripley's Believe It or Not!® †	3	090-5032-0T **22-1080 -YEL-GRN-**	SAME	Not Used	090-5067-00T **25-1400 -RED-**
Elvis® †	4	090-5020-20T **22-900 -YELLOW-**	SAME	090-5020-30 **23-900 -GREEN-**	SAME
The Sopranos℠ †	2	090-5032-0T **22-1080 -YEL-GRN-**	SAME	Not Used	Not Used
NASCAR® and [NDSE] †	2	090-5030-0T **23-1100 -ORANGE-**	SAME	Not Used	Not Used
Grand Prix †	2	090-5030-0T **23-1100 -ORANGE-**	SAME	Not Used	Not Used

† Coil Part Numbers ending with a "**T**" signifies the Diode is on the top of the lug *(on the coil-winding side)*; Coil Part Numbers ending with a "**B**" signifies the Diode is on the bottom of the lugs.

** S.A.M. System Games **DO NOT REQUIRE DIODES**. If you use a coil from your stock which has a diode, remove it **ONLY FOR** S.A.M. System Games.

World Poker Tour™ (WPT)**	4	090-5032-ND **22-1080 [NO DIODE]**	SAME	090-5030-ND **23-1100 [NO DIODE]**	SAME
©Disney's Pirates of the Caribbean**	2	090-5030-ND **23-1100 [NO DIODE]**	SAME	Not Used	Not Used
Family Guy™ **	3 Norm.	090-5030-ND **23-1100 [NO DIODE]**	SAME	090-5062-ND **23-1500 [NO DIODE]**	Not Used
	2 Mini	090-5046-01-ND **27-950 [NO DIODE]**	SAME		
Spider-Man™ **	3	090-5032-ND **22-1080 [NO DIODE]**	SAME	Not Used	090-5032-ND **22-1080 [NO DIODE]**

APPENDIX E

Generic Coil Cross-Reference Guide † ‡

Flipper Coil Table ‡ ††

GAME NAME	Nº of Flippers	FLIPPERS w/E.O.S. Switch SPI Nº / GAUGE-TURNS / Color		FLIPPERS no E.O.S. Switch SPI Nº / GAUGE-TURNS / Color	
		LOWER LEFT	LOWER RIGHT	UPPER LEFT	UPPER RIGHT
Laser War ‡	2	090-5011-00 **22-750 / 30-2600**	SAME	Not Used	Not Used
Secret Service ‡	3	090-5006-00 **23-620 / 30-2600**	SAME	Not Used	090-5006-00 **23-620 / 30-2600**
Torpedo Alley ‡	3	090-5011-00 **22-750 / 30-2600**	090-5013-00 **23-700 / 30-2600**	Not Used	090-5012-00 **23-800 / 30-2600**
Time Machine ‡	2	090-5011-00 **22-750 / 30-2600**	SAME	Not Used	Not Used
‡ These coils are dual-wound.					
Playboy 35th Anniversary ††	2	090-5020-02 **22-900 -YEL-YEL-**	SAME	Not Used	Not Used
ABC Monday Night Football ††	2	090-5020-02 **22-900 -YEL-YEL-**	SAME	Not Used	Not Used
†† A very small % of these games used a 090-5020-20 coil which used a proto-type Solid State Flipper System. The two types of coils both are 22-900 coils; the only difference is the addition of the 1N5404 Diode on the (-02) coils which was used in the Deger Design.					
Robocop	2	090-5020-20 **22-900 -YEL-YEL-**	SAME	Not Used	Not Used
Phantom of the Opera	2	090-5020-20 **22-900 -YEL-YEL-**	SAME	Not Used	Not Used
Back to the Future	2	090-5020-20 **22-900 -YEL-YEL-**	SAME	Not Used	Not Used
The Simpsons	2	090-5020-20 **22-900 -YEL-YEL-**	SAME	Not Used	Not Used
Checkpoint	2	090-5020-20 **22-900 -YEL-YEL-**	SAME	Not Used	Not Used
Teenage Mutant Ninja Turtles	2	090-5020-30 **23-900 -GRN-GRN-**	SAME	Not Used	Not Used
Batman	2	090-5020-30 **23-900 -GRN-GRN-**	SAME	Not Used	Not Used
Star Trek 25th Anniversary	2	090-5020-30 **23-900 -GRN-GRN-**	SAME	Not Used	Not Used
Hook	2	090-5030-00 **23-1100 -ORG-ORG-**	090-5020-30 **23-900 -GRN-GRN-**	Not Used	Not Used
Lethal Weapon 3	2	090-5030-00 **23-1100 -ORG-ORG-**	SAME	Not Used	Not Used
Star Wars	2	090-5032-00 **22-1080 -YEL-GRN-**	SAME	Not Used	Not Used
Rocky & Bullwinkle & Friends	2	090-5020-30 **23-900 -GRN-GRN-**	SAME	Not Used	Not Used
Jurassic Park	3	090-5020-30 **23-900 -GRN-GRN-**	SAME	Not Used	090-5030-00 **23-1100 -ORG-ORG-**

Table continued on the next page.

APPENDIX E

Flipper Coil Table †

GAME NAME	Nº of Flippers	FLIPPERS w/E.O.S. Switch		FLIPPERS no E.O.S. Switch	
		SPI Nº / GAUGE-TURNS / Color		SPI Nº / GAUGE-TURNS / Color	
		LOWER LEFT	LOWER RIGHT	UPPER LEFT	UPPER RIGHT
Last Action Hero	2	090-5020-30 **23-900 -GRN-GRN-**	SAME	Not Used	Not Used
Tales from the Crypt	3	090-5032-00 **22-1080 -YEL-GRN-**	SAME	Not Used	090-5041-00 **25-1800 -BLU-GRN-**
The Who's Tommy	3	090-5020-30 **23-900 -GRN-GRN-**	SAME	090-5041-00 **25-1800 -BLU-GRN-**	Not Used
WWF Royal Rumble	4	090-5032-00 **22-1080 -YEL-GRN-**	SAME	090-5041-00 **25-1800 -BLU-GRN-**	SAME
Guns N' Roses	3	090-5032-00 **22-1080 -YEL-GRN-**	SAME	090-5030-00 **23-1100 -ORG-ORG-**	Not Used
Maverick	3	090-5032-00 **22-1080 -YEL-GRN**	SAME	Not Used	090-5032-00 **22-1080 -YEL-GRN-**
Mary Shelley's Frankenstein	3	090-5030-00 **23-1100 -ORG-ORG-**	SAME	Not Used	090-5030-00 **23-1100 -ORG-ORG-**
Baywatch	4	090-5030-00 **23-1100 -ORG-ORG-**	090-5020-30 **23-900 -GRN-GRN-**	090-5025-00 **24-1570 -See Note-**	090-5030-00 **23-1100 -ORG-ORG-**
Batman Forever	3	090-5032-00 **22-1080 -YEL-GRN-**	090-5020-20 **22-900 -YEL-YEL-**	Not Used	090-5020-30 **23-900 -GRN-GRN-**
Apollo 13	2	090-5032-00 **22-1080 -YEL-GRN-**	SAME	Not Used	Not Used
Golden Eye	2	090-5032-00 **22-1080 -YEL-GRN-**	SAME	Not Used	Not Used
Twister	2	090-5020-20 **22-900 -YEL-YEL-**	090-5032-00 **22-1080 -YEL-GRN-**	Not Used	Not Used
ID4: Independence Day	3	090-5032-00 **22-1080 -YEL-GRN-**	SAME	Not Used	090-5020-30 **23-900 -GRN-GRN-**
Space Jam †	2	090-5032-00T **22-1080 -YEL-GRN-**	090-5020-20T **22-900 -YEL-YEL-**	Not Used	Not Used
The Star Wars Trilogy - Special Edition †	2	090-5032-00T **22-1080 -YEL-GRN-**	SAME	Not Used	Not Used
The Lost World: Jurassic Park †	2	090-5032-00T **22-1080 -YEL-GRN-**	SAME	Not Used	Not Used
The X-Files †	2	090-5032-00T **22-1080 -YEL-GRN-**	SAME	Not Used	Not Used
Starship Troopers †	3	090-5030-00T **23-1100 -ORG-ORG-**	SAME	Not Used	090-5032-00T **22-1080 -YEL-GRN-**
Viper Night Drivin' †	2	090-5030-00T **23-1100 -ORG-ORG-**	SAME	Not Used	Not Used
Lost In Space †	2	090-5030-00T **23-1100 -ORG-ORG-**	090-5032-00T **22-1080 -YEL-GRN-**	Not Used	Not Used
Godzilla †	2	090-5032-00T **22-1080 -YEL-GRN-**	SAME	Not Used	Not Used
South Park †	2	090-5030-00T **23-1100 -ORG-ORG-**	SAME	Not Used	Not Used
Harley-Davidson® † *and* Harley-Davidson® 2nd Ed. †	2	090-5032-00T **22-1080 -YEL-GRN-**	090-5030-00T **23-1100 -ORG-ORG-**	Not Used	Not Used
Striker Xtreme (NFL) †	3	090-5032-00T **22-1080 -YEL-GRN-**	090-5030-00T **23-1100 -ORG-ORG-**	090-5030-00T **23-1100 -ORG-ORG-**	Not Used
Sharkey's Shootout †	3	090-5030-00T **23-1100 -ORG-ORG-**	SAME	090-5030-00T **23-1100 -ORG-ORG-**	Not Used
High Roller Casino †	2	090-5020-20T **22-900 -YEL-YEL-**	090-5032-00T **23-1080 -YEL-GRN-**	Not Used	Not Used
Austin Powers™ †	2	090-5020-30 **23-900 -GRN-GRN-**	090-5030-00T **23-1100 -ORG-ORG-**	Not Used	Not Used
MONOPOLY® †	3	090-5032-00T **22-1080 -YEL-GRN-**	SAME	Not Used	090-5062-00T **23-1500 -BLU-BLU-**
Playboy †	2	090-5030-00T **23-1100 -ORG-ORG-**	SAME	Not Used	Not Used
RollerCoaster Tycoon™ †	4	090-5032-00T **22-1080 -YEL-GRN-**	SAME	090-5067-00T **25-1400 -RED-RED-**	090-5068-00T **25-1600 -WHT-WHT**
The Simpsons™ Pinball Party †	6* (5 with Flipper Bats)	090-5032-00T **22-1080 -YEL-GRN-**	SAME	Not Used	090-5030-00T **23-1100 -ORG-ORG-**
		** The Homer Head Assembly is affixed to an Upr. Rt. Style Flipper (no E.O.S. Switch):*	* 090-5020-20T **22-900 -YEL-YEL-**	**Flippers (Mini-Bats) on 2nd Level Playfield:** 090-5041-00T **25-1800 -BLU-GRN-**	090-5025-00T **24-1570 -See Note-**
Terminator® 3: Rise of the Machines™ †	2	090-5032-00T **22-1080 -YEL-GRN-**	SAME	Not Used	Not Used
The Lord of the Rings™ †	2	090-5020-20T **22-900 -YEL-YEL-**	SAME	Not Used	Not Used
Ripley's Believe It or Not!® †	3	090-5032-00T **22-1080 -YEL-GRN-**	SAME	Not Used	090-5067-00T **25-1400 -RED-RED-**

† Coil Part Nºs ending with a "T" signifies the Diode is on the top of the lug (on the coil-winding side); Coil Part Nºs ending with a "B" signifies the Diode is on the bottom of the lugs.

APPENDIX F

Motor Specification (White Star Board System* Only) Table

Game Name	Function	Specifications	Part Numer
Apollo 13	Rocket Up/Down Movement	Bowman Motor 24VAC 60Hz 3W 6 RPM CCW	515-6383-00 *incl. Connector*
	Moon Unit Rotational Orbit	Multi Products Motor 24VAC 50/60Hz 3W 6 RPM CCW	515-6487-00 *incl. Connector*
	Shaker	Johnson Motor *(Vibrator)* 10.5VDC 10 AMP 2950 RPM CW	041-5029-**00** *MOTOR ONLY*
Golden Eye	Satellite Left/Right Movement	Bowman Motor 24VAC 60Hz 3W 6 RPM CW	515-6528-00 *incl. Connector*
Twister	Spinning Disc with Magnet	Multi Products Motor 24VAC *(041-5026-00)* 50/60Hz 3W 325 RPM CCW	515-6347-00 *incl. Connector*
	Backbox Fan (Tornado Wind)	Multi Products Motor 24VAC *(041-5052-00)* 50/60Hz 3W 3600 RPM CW	515-6531-00 *incl. Connector*
ID4: Independence Day	Alien Head Open/Close Movement	Servo Motor *(94322)*	041-5045-00 *MOTOR ONLY*
SPACE JAM (NO MOTOR USED)			
The Star Wars Trilogy - S.E.	X-Wing Left/Right Movement	Bowman Motor 24VAC *(041-5058-00)* 60Hz 3W 10 RPM CCW	515-6383-01 *incl. Connector*
The Lost World: Jurassic Park	Snagger & Center Link Lift Up/Down Movement	Multi Products Motor 20VDC *(041-5059-03)* 9 RPM Non-Directional	515-6715-03 *incl. Connector*
	Shaker	Johnson Motor *(Vibrator)* 10.5VDC 10 AMP 2950 RPM CW	041-5029-**00** *MOTOR ONLY*
The X-Files	X-File Cabinet Lift Up/Down Movement	Multi Products Motor 20VDC 9 RPM CCW	041-5057-00 *MOTOR ONLY*
Starship Troopers	Warrior Bug Forward/Reverse Movement	Haydon Switch & Instrument, Inc. Stepper Motor 12VDC 4.6W *(041-5062-00)*, Series 36000: 1.4"ø *(Non-Captive Shaft **not included**)* HSI #36864-12 *(Unipolar)* Travel per Step: .004 Step Angle: 15°	515-6794-00 *incl. Connector* **Requires 7" Shaft:** 530-5503-00
VIPER NIGHT DRIVIN' (NO MOTOR USED)			
Lost In Space	Spinning Disc with Magnet	Multi Products Motor 24VAC *(041-5046-00)* 50/60Hz 3W 325 RPM CCW	515-6347-00 *incl. Connector*
Godzilla	Shaker ‡	Multi #3811 0630 Motor (Vibrator) 12VDC 3100 RPM CW *(w/DRL PTS)* ‡	041-5029-**01** *MOTOR ONLY*
SOUTH PARK (NO MOTOR USED)			
Harley-Davidson® *1st through 3rd Editions*	Shaker ‡	Multi #3811 0630 Motor (Vibrator) 12VDC 3100 RPM CW *(w/DRL PTS)* ‡	041-5029-**01** *MOTOR ONLY*
	Motorcycle Lift Up/Down Movement	Autotrol 24VAC *(041-5072-02)* 20 RPM CCW	515-7025-00 *incl. Connector*
Striker Xtreme (NFL)	Goalie (Linebacker) Left to Right Movement	Multi #3590 12VDC *(041-5075-00)* 60 RPM	515-7071-00 *incl. Connector*
Sharkey's Shootout	Mystery Ball Rotating Movement	Hankscraft Motor Model-E 24VAC *(041-5076-00)* 50/60Hz 3W 20 RPM CW	515-7095-00 *incl. Connector*
High Roller Casino	Roulette Wheel Rotating Movement	Multi Products Motor 20VDC *(041-5078-00)* 17 RPM CCW	515-7153-00 *incl. Connector*
	Up/Dn. Ramp in Slot Mach. Lift Up/Down Movement	Haydon Switch & Instrument, Inc. Stepper Motor 12VDC 4.6W *(041-5062-00)*, Series 36000: 1.4"ø *(Non-Captive Shaft **not included**)* HSI #36864-12 *(Unipolar)* Travel per Step: .004 Step Angle: 15°	515-6794-00 *incl. Connector* **Requires Shaft 4¼":** 530-5503-01
Austin Powers™	Time Machine Rotating Movement	Multi Products Motor 24VAC *(041-5079-00)* 50/60Hz 20RPM CCW	515-7141-00 *incl. Connector*
	Laser Beam Left to Right Directional	Autotrol Motor 24VAC *(041-5081-00)* 50/60Hz 4W 10RPM Bi-Directional	515-7171-00 *incl. Connector*
	Dr. Evil Target Lift Up/Down Movement	Hankscraft Motor Model-E 24VAC *(041-5030-00)* 50/60Hz 6RPM CCW	515-5900-00 *incl. Connector*
Monopoly®	Mini-Flipper (Waterworks) Rotating Movement	Multi Prod. Motor & Gear Box #7000 EX00159A 20VDC 50/60Hz 85RPM CC/CCW	041-5083-00 *MOTOR ONLY*
Playboy	Triangular Billboard Rotating Movement	Autotrol Motor *(BD511 150-1387)* 24VAC 50/60Hz 12RPM Bi-Directional	041-5086-02 *MOTOR ONLY*
	Centerfold Mechanism Open/Close Movement	Multi Products *(3680)* Motor 12v DC 10/12 RPM CC/CCW	041-5075-04 *MOTOR ONLY*
	Tease Drop Screen Lift Up/Down Movement	Haydon Switch & Instrument, Inc. Stepper Motor 12VDC 4.6W *(041-5062-00)*, Series 36000: 1.4"ø *(Non-Captive Shaft **not included**)* HSI #36864-12 *(Unipolar)* Travel per Step: .004 Step Angle: 15°	515-6794-00 *incl. Connector* **Requires 7" Shaft:** 530-5503-00

‡ ***Please Note:*** *"-01" Shaker Motor is **Not Compatible** with old Shaker Motor 041-5029-**00** (Shaker Motor Assy. 515-5893-00).*
*THIS NEW MOTOR CAN ONLY BE USED IN NEW SHAKER MOTOR ASSY. 515-5893-**01**.*

Table continued on the next page.

Game Name	Function	Specifications	Part Number
ROLLERCOASTER TYCOON™ (NO MOTOR USED)			
THE SIMPSONS™ PINBALL PARTY (NO MOTOR USED)			
Terminator® 3: Rise of the Machines™	Backbox Ball Shooter Up/Down Movement	Multi Products Motor 24VAC *(041-5079-01)* 21 RPM CW	515-7317-00 *incl. Connector*
The Lord of the Rings™	Balrog *(Motor & Gate)* Open/Close Movement	Multi Prod. Motor 20VDC Series 600B *(or equiv.)* 50/60Hz 10 RPM Bi-Directional	041-5088-01 *MOTOR ONLY*
RIPLEY'S BELIEVE IT OR NOT!® (NO MOTOR USED)			
Elvis®	Elvis™ Front/Back Movement	Haydon Switch & Instrument, Inc. Stepper Motor 12VDC 10W *(041-5089-00)*, *(Non-Captive Shaft **not included**)* *HSI #46868-12-002*	500-6809-00 *incl. Connector* **Requires 7.25" Shaft:** 530-5658-00
	▶▶▶ **OPTIONAL** ◀◀◀ Shaker	Multi #3811 0630 Motor *(Vibrator)* 12VDC *(041-5029-**01**) 3100 RPM (w/DRL PTS)*	515-5893-01 *incl. Connector*
The Sopranos℠	Bada Bing! Girls x2 Rotating Posts Movement	Autotrol Synchronous Motor 24VAC 4W 50/60Hz 45.7/54.9 RPM Bi-Directional	041-5092-00 **w/1" Shaft + 12" Leads**
NASCAR® and [NDSE]	Back Panel Rotating *(Car)* Windmill *(Skill Ball Enter)*	Multi Products Motor & Gear Box 20VDC Model #8000 *(EX-04-073)* 10 RPM	041-5093-00 *MOTOR ONLY*
Grand Prix	Back Panel Rotating *(Car)* Windmill *(Skill Ball Enter)*	Multi Products Motor & Gear Box 20VDC Model #8000 *(EX-04-073)* 10 RPM	041-5093-00 *MOTOR ONLY*
World Poker Tour™ (WPT) (NO MOTOR USED)			
The Simpons™ Kooky Carnival	Bart on Skateboard Left/Right Movement	Multi Products Motor with Crank 24VAC *(041-5095-01)* 50/60Hz 3W 14 RPM	500-6947-01 *incl. Connector*
	Left & Right Ramps Up/Down Movement	Multi Products Motor 24VAC *(041-5048-01)* 50/60Hz 3W 15 RPM CCW *(Qty. 2 in game)*	515-7558-00 *incl. Connector*
	Shaker *(details in SKC Manual, Page **24**)*	Multi #3811 0630 Motor *(Vibrator)* 12VDC 3100 RPM *(w/DRL PTS)*	041-5029-**01** *MOTOR ONLY*
©Disney's Pirates of the Caribbean	Spinning Disk	Multi #3811**R** 0630 Motor *(Vibrator)* 12VDC *(041-5029-**04**)* 3100 RPM *(w/DRL PTS)* *-04 is RoHS compliant; can substitute with -01 domestic*	511-5024-04 *incl. Connector*
	Pirate Ship Sinking/Raising Movement	Multi Products Motor & Gear Box 24VDC Model #7000-DCM 12 RPM	041-5101-00 *MOTOR ONLY*
Family Guy™	Stewie Figurine Left & Right Movement	Stepper Motor NPM PF35T-48D4STD 5V RVB *(041-5102-00 Reference Only)*	511-5043-00 *incl. Connector*
Spider-Man™	Doc Ock, Sandman & 3-Bank Up/Down Movement	Sync. Motor 24VAC 50/60Hz 3W 12 RPM CW *(041-5103-00 Reference Only)*	511-5063-00 *incl. Connector*
	▶▶▶ **OPTIONAL** ◀◀◀ **Shaker Motor Kit** 502-5027-00	Multi #3811**R** 0630 Motor *(Vibrator)* 12VDC *(041-5029-**04**) 3100 RPM (w/DRL PTS)* *-04 is RoHS compliant; can substitute with -01 domestic*	515-5893-01 *incl. Connector*

APPENDIX F

Motor Specification Table

The following table only list games that used motors. *Part Numbers starting with "515-" will include the Wiring Harness & Connector.*

Game Name	Function	Specifications	Part №
ABC Monday Night Football	Goal Post Up/Down Movement	Motor 24v A.C. 60 RPM CW	515-5222-00
Phantom of the Opera	Organ Up/Down Movement	Bowman Motor 24v 60Hz 3W 11 RPM CCW	515-5256-00
Checkpoint	Mag Wheel (in Backbox)	Motor D.C. (KEN)	041-5005-00
	Shaker	Johnson Motor (Vibrator)	041-5002-00
Teenage Mutant Ninja Turtles	Spinning Pizza Ball Deflector	Gear Motor 24v A.C. 325 RPM CW	515-5397-00
Batman	Bar Target Up/Down Movement	Bowman Motor 24v 60Hz 3W 11 RPM CCW	515-5256-00
Star Trek 25th Anniversary	Swinging Target	Bowman Motor 24v 22½ RPM	515-5534-00
	Transporter F/X	Gear Motor 24v A.C. 3½ RPM	500-5421-00
	Cooling Fan (for Transporter F/X)	4½" Motor 12v	041-5014-00
Lethal Weapon 3	Spinning Light	Motor 2½ v A.C. 4000 RPM CCW	041-5017-00
Star Wars	Bar Target Up/Down Movement	Bowman Motor 24v 60hz 3W 11 RPM CCW	515-5256-00
	R2D2 Robot Left/Right Movement	Bowman Motor 24v A.C. 22½ RPM CW	515-5571-00
	Death Star Rotation	Bowman "G" Motor 24v A.C. 60Hz 6 RPM CW	515-5570-00
Rocky & Bullwinkle & Friends	Nell Log "Cutting Blade" Forward/Back Movement	Autotrol Model E Motor 24v 60hz 4W 3 RPM CCW	041-5023-00
Jurassic Park	T-Rex Left/Right Movement	Multi Motor 5v D.C.	041-5025-00
	T-Rex Up/Down Movement	Bowman Motor 24v 11 RPM CW	041-5026-00
	Shaker	Johnson Motor (Vibrator)	041-5002-00
Last Action Hero	Crane Left/Right Movement	Multi Products Motor 12v D.C. #3312 OSC	041-5027-00
	Shaker	Johnson Motor (Vibrator) 10.5v D.C. 10 AMP 2950 RPM CW	041-5029-00
Tales from the Crypt	Tombstone Up/Down Movement	Bowman Motor 24v A.C. 6 RPM CCW	515-5900-00
	Shaker	Johnson Motor (Vibrator) 10.5v D.C. 10 AMP 2950 RPM CW	041-5029-00
The Who's Tommy	Mirror Up/Down Movement	Bowman Motor 24v A.C. 6 RPM CCW	515-5900-00
	Flipper Blinders	Servo Motor (94102)	041-5032-00
	Spinning Airplane Propellers	Motor D.C.	041-5033-00
WWF Royal Rumble	Shaker	Johnson Motor (Vibrator) 10.5v D.C. 10 AMP 2950 RPM CW	041-5029-00
Maverick, The Movie	Turning Paddle Wheel	Motor 24v A.C. 10 RPM	041-5036-00
Mary Shelley's Frankenstein	Creature Head Left/Right Movement	Servo Motor (94102)	041-5032-00
Batman Forever	Cannon Left/Right Movement	Bowman Motor 24v A.C. 60Hz 3W 6 RPM CCW	515-6383-00

APPENDIX G

Part Number Prefix Classification Codes

I. Electrical Source, Energy & Signal Converters
- 010- Transformers
- 031- Speakers
- 090- Solenoids (Coils)
- 150- Filters, Outlets, Varistors, Thermistors
- 200- Fuses

II. Conductors, Connectors & Insulators
- 034- Line Cords
- 036- Cable Assemblies & Wiring Harnesses
- 041- Motors
- 045- Connectors (All Types)
- 055- Lugs (M/F), Pins (M/F), Discs, Ring Terminals, Terminal Strips, etc.
- 060- Polarizing Keys and Conn. Covers
- 077- Lamp Sockets

III. Circuits & Circuit Elements
- 100- ICs
- 110- Transistors
- 112- Diodes (All Types including LEDs & Modules)
- 121- Resistors
- 123- Resistors (Variable & Adjustable)
- 124- Regulators & Bridge Rectifiers
- 125- Capacitors (Radial Lytics & Ferrites)
- 126- Piezo Crystal
- 127- Heatsinks
- 130- Capacitors (Tecates & Ceramics)
- 140- Oscillators (Clocks/Crystals)
- 165- Light Bulbs
- 180- Switches
- 181- Switch Membranes (Pads) & Piezo Sensors
- 190- Relays
- 960- EPROM *(Raw Part)*
- 965- EPROM *(Programmed Part)*

IV. Bolts, Screws, Nuts, Washers & Nails
- 231- Bolts
- 232- Screws (Pan Head)
- 234- Screws (HWH)
- 237- Screws (Misc.)
- 240- Nuts (Misc.)
- 242- Washers (Flat, Round)
- 244- Washers (Split Lock)
- 245- Nyliners
- 246- Washers (Lockers, External Tooth)
- 281- Nails

V. Mechanical Components
- 249- Rivets
- 251- Pins (Dowel), Finishing Nails, Hairpins, Spring Pins and Clevis Pins
- 254- Stand-Offs, Spacers and Shims
- 260- Steel Ball (All Types Steel, Glowing, Delrin, etc.)
- 265- Springs (Extension)
- 266- Springs (Compression)
- 267- Springs (Torsion)
- 269- Springs (Washers - Belleville, Wave)
- 270- Retaining Rings
- 280- Grommets, Bushings and Nyliners
- 283- Bearings

VI. Handles, Locks, Catches, Latches, Keys
- 355- Handles, Locks, Catches, Latches and Keys

VII. Fabricated Parts
- 390- Hinges
- 501- Coin Doors
- 515- Sub-Assemblies
- 520- Printed Circuit Boards (PCBs)
- 522- Display Glass
- 525- Wood Parts
- 530- Screw Machined Parts
- 535- Fabricated Parts
- 545- Molded (Extruded) Plastic and Rubber Parts (Rings, Sleeves, etc.)
- 550- Molded (Inserts)

VIII. In-House Assemblies
- 500- End Product (Systems and Models)
- 502- Kits (Created In-House)
- 505- Cabinets (complete)
- 510- Riveted Sub-Assemblies (In-House)
- 511- Sub-Assemblies (In-House)
- 515- Sub-Assemblies*

  **2 or more 515-'s but still a sub-assembly.*

IX. Bulk Materials
- 600- Braided Wire & Ground Straps
- 601- Stranded Wire
- 602- Ribbon Cable
- 604- Telephone Line Cord
- 605- Sleeving (Shrink Tubing)
- 625- Velcro (non-adhesive)
- 626- Foam Rubber, Foam Pads, Rubber Bumpers (Blue Pads), Tape (All Types) Velcro (adhesive) and String / Rope

X. Miscellaneous
- 000- Tools *(see also 777-)* and Supplies
- 040- Clamps, Ties & Clips
- 042- Pulleys
- 091- Coin Mechs
- 205- Fuse Holders
- 631- Staples
- 660- Glass (Playfield, Backglass, etc.)
- 675- Cleaners
- 705- Packing & Shipping Items
- 755- Instruction, Coin Cards, Ins. Sheets
- 756- Information Sheets, Service Bulletins, Instruction Sheets in Kits and Templates
- 777- Tools (Wrenches and Drivers)
- 780- Manuals
- 802- Decal Kits (comprised of 820's)
- 820- Decals, Mylar and Labels (Sheets/Sets)
- 803- Plastic Kits (comprised of 830's)
- 830- Plastic Pieces (Butyrate Sheets/Sets)
- 880- Toys, Models, Figurines, etc.
- 900- Game Posters

APPENDIX H

Playfield Inserts (Plastic Light Covers)

Patterns: STARBURST **STIPPLE**	**STARBURST CIRCULAR** 5/8" ø **550-5000-XX**	**STARBURST CIRCULAR** 3/4" ø **550-5001-XX**	**STARBURST CIRCULAR** 1" ø **550-5002-XX**	**STARBURST CIRCULAR** 1-3/16" ø **550-5003-XX**	**STARBURST CIRCULAR** 1-1/2" ø **550-5004-XX**
STARBURST CIRCULAR 2-1/4" ø **550-5005-XX**	**STARBURST CIRCULAR** 2-3/4" ø **550-5006-XX**	**PLAIN CIRCULAR** 3/4" ø **550-5007-XX**	**PLAIN CIRCULAR** 1" ø **550-5008-XX**	**PLAIN CIRCULAR** 1-3/16" ø **550-5009-XX**	**PLAIN CIRCULAR** 1-1/2" ø **550-5010-XX**
PLAIN CIRCULAR 2-1/4" ø **550-5011-XX**	**PLAIN CIRCULAR** 2-3/4" ø **550-5012-XX**	**STIPPLE CIRCULAR** 1" ø **550-5048-XX**	**STIPPLE 1" SQUARE** 1" **550-5019-XX**	**ROLLOVER BUTTON BASE** **550-5026-XX**	**WHITE STAR** *(only in white)* **545-5015-00**
STIPPLE RECTANGULAR 1-1/2" X 3/4" **550-5018-XX**	**STIPPLE RECTANGULAR** 1-5/8" X 1-1/2" **550-5051-XX**	**STARBURST RECTANGULAR** 2-1/4" X 1-1/8" **550-5044-XX**	**PLAIN RECTANGULAR** 2-1/4" X 1-1/8" **550-5049-XX**	**PLAIN RECTANGULAR** 1-1/4" X 1-1/2" **550-5050-XX**	**PLAIN RECTANGULAR** 2" X 2-1/2" **550-5063-XX**
STARBURST MINI SHIELD 1" X 1" **550-5024-XX**	**STARBURST LARGE SHIELD** **550-5025-XX**	**MINI HOT DOG** 1-5/8" **550-5020-XX**	**BEVEL HOT DOG** 3-1/2" **550-5021-XX**	**PLAIN HOT DOG** 3-1/2" **550-5022-XX**	**BANANA** **550-5023-XX**
STARBURST ARROW-SMALL **550-5013-XX**	**STARBURST ARROW-LARGE** **550-5070-XX**	**STARBURST ARROW-HEAD SMALL** **550-5014-XX**	**STARBURST ARROW-HEAD LARGE** **550-5015-XX**	**STARBURST BULLET** **550-5016-XX**	**STARBURST TRIANGLE** **550-5017-XX**

Note: *The shapes and sizes shown above are not to scale. Some shapes may no longer be available in every color.*

Instructions: Parts which may come in various colors (i.e. targets, some posts, playfield inserts, etc.) end in a 2-digit number which correspond to the color of that part. The "**-XX**" in part number which may come in various colors should be replaced with the desired 2-Digit number corresponding to the color desired below. *Not all colors may be available.*

PLASTIC PART COLOR CHART

Nº	Color	Nº	Color	Nº	Color	Nº	Color	Nº	Color	Nº	Color
-00	**Black** or Solid Clear	-03	Amber	-06	Yellow	-09	Purple	-12	Fluor. Blue	-15	Luminescent
-01	Clear	-04	Green	-07	Orange	-10	Fluor. Orange	-13	Teal Green	-16	Gold
-02	Red	-05	Blue	-08	White	-11	Fluor. Green	-14	Gray	-17	Trans. Brown

APPENDIX I

Anti-Loft Stand-Up Targets

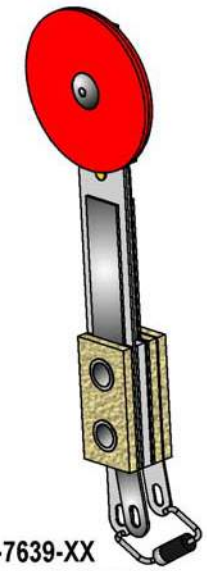

515-7639-XX
1" ø ROUND
ANTI-LOFT STAND-UP
SWITCH & TARGET
RIVETED ASSEMBLY*

515-7581-XX
1" X 1/2" NARROW RECTANGLE
ANTI-LOFT STAND-UP
SWITCH & TARGET
RIVETED ASSEMBLY*

Ordering Note:
-XX REPLACE WITH 2-DIGIT FOR COLOR:
Not all colors available
(colors shown not exact)

-02	Red
-03	Amber
-04	Green
-05	Blue
-06	Yellow
-07	Orange
-08	White

515-7568-XX
1" X 1" SQUARE
ANTI-LOFT STAND-UP
SWITCH & TARGET
RIVETED ASSEMBLY*

(Required on all Stand-Up Targets)
▼ Switch Diode, 1N4004
112-5003-00

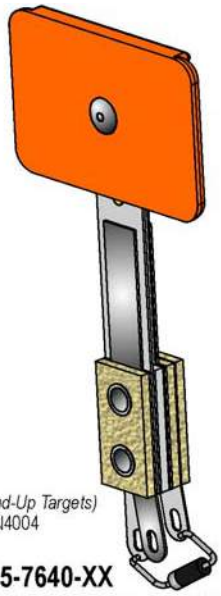

515-7640-XX
1" X 1-1/2" WIDE RECTANGLE
ANTI-LOFT STAND-UP
SWITCH & TARGET
RIVETED ASSEMBLY*

*Some targets may require the lugs position be changed to the left *or* to the right, depending on the application; these targets will have a different part number and are called out in the game manual they are used in *(see Section 4, Chapter 1, Parts Identification & Location, Playfield ... - Switches.)* Review the game manual for the game desired for the original target used or application.

For Anti-Loft Application use
Large Foam Pad,
5/8" X 7/16" X 3/16" Thick
626-5078-00

For > Light < Anti-Loft Application use
Small Foam Pad,
7/16" X 7/16" X 1/8" Thick
626-5029-00

Foam Pads have self-adhesive backing

or

Anti-Loft Switch Back Plate ▼
535-9823-01

ASM. REF. IN-HOUSE USE ONLY:
Light Anti-Loft Stand-Up Target Assemblies which includes the Anti-Loft Switch Back Plate, Switch Mounting Bracket and Foam Pad *(Small)*: 500-5835-XX (ROUND), 500-5857-XX (NARROW), 500-5232-XX (SQUARE) and 500-5321-XX (RECTANGLE).

Anti-Loft Stand-Up Target Assemblies which includes the Anti-Loft Switch Back Plate, Switch Mounting Bracket and Foam Pad *(Large)*: 500-7062-XX (ROUND), 500-6985-XX (NARROW), 500-6984-XX (SQUARE) and 500-7063-XX (RECTANGLE).

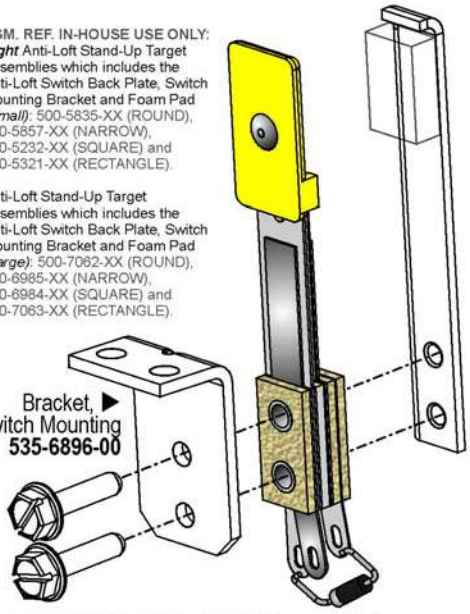

Bracket, ▶
Switch Mounting
535-6896-00

▲ #6-32 X 5/8" Slotted HWH Swage (Zinc) Screws (Qty. 2/per) **237-5976-04**

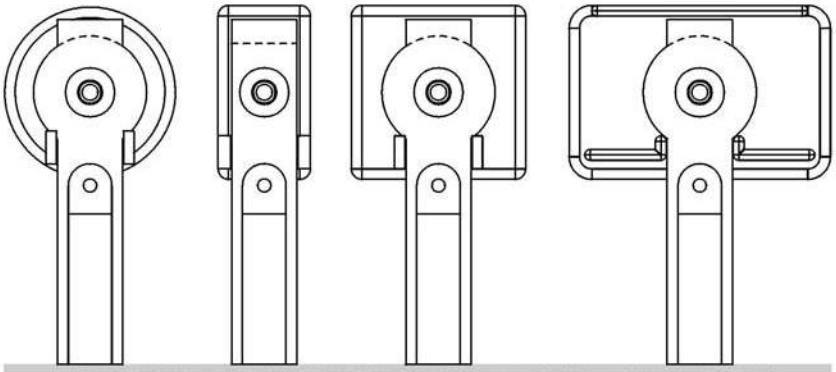

REAR VIEWS OF ANTI-LOFT TARGET & SWITCH ASSEMBLIES

The material of the Anti-Loft Switch has been extended higher to be used with the Anti-Loft Switch Back Plate. ***IMPORTANT:*** *Switch & Target Assemblies (**X**) **without** the extension (the predecessors) **SHOULD NOT** be used with an **Anti-Loft** Switch Back Plate (shown left).*

APPENDIX REFERENCE FOR PINBALL GAMES WHICH USED THE BELOW SWITCH & TARGET ASSEMBLIES NOTE:

*The Switch & Target Assemblies (**X**) **without** the extension have the following part numbers*: 515-5966-XX (Round), 515-5967-XX (Narrow), 515-5162-XX (Square) and 515-6027-XX (Rectangle) and should only be used with the Switch Back Plate (shown right), 535-6452-00 and Small Foam Pad, 626-5029-00.*

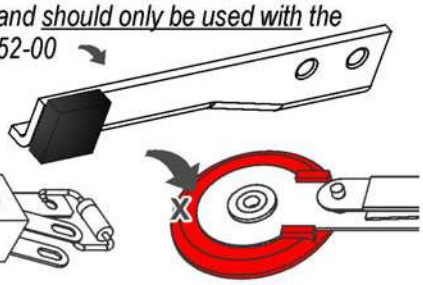

** If the above referenced part numbers are no longer available from the factory or your distributor, it will be substituted with the appropriate Anti-Loft counterpart. Not all colors may be available.*

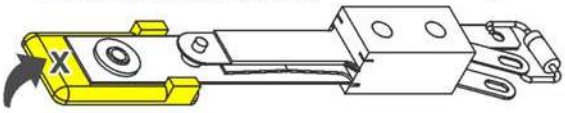

"**R**" means «Target Insert» is reversed, allowing for Rear Mounted application.

-XX REPLACE WITH 2-DIGIT FOR COLOR:
-00 Black
-01 Clear
-02 Red
-03 Amber
-04 Green
-05 Blue
-06 Yellow
-07 Orange
-08 White
-09 Purple
-10 Fluor. Orange
-11 Fluor. Green
-12 Fluor. Blue
-13 Teal Green
-14 Gray
-15 Luminescent
-16 Gold
Note: Not all colors available.

Take Note:

1. **Items A-E** come in various colors. *These targets may not be available in every color.* The "**-XX**" in should be replaced with the desired 2-Digit number for the color desired as described in the Color Chart below. *As of print date, the following colors were used :*
-01 Clear (A, D); **-02** Red (A, B, C, D, E); **-03** Amber (D, E); **-04** Green (A, B); **-05** Blue (C); **-06** Yellow (A, C), **-09** Purple (B, D); **-11** Fluorescent Green (A, B, D)
2. *For location(s) and type of Stand-Up Targets used, if any, see Section **4**, Chapter **1**, Parts Identification & Location.*

Nr.	STAND-UP TARGET PARTS	SPI PART Nr.
A	Modular Stand-Up Target Narrow Assy.	500-6138-XX
	Stand-Up Target Narrow (Insert)	**545-6138-XX**
B	Modular Stand-Up Target Square Assy.	500-6139-XX
	Stand-Up Target Square (Insert)	**545-6139-XX**
C	Modular Stand-Up Target Rectangle Assy.	500-6228-XX
	Stand-Up Target Rectangle (Insert)	**545-6228-XX**
D	Modular Stand-Up Target Round Assy.	500-6075-XX
	Stand-Up Target Round (Insert)	**545-6075-XX**
E	Mod. Stand-Up Target 1" Spherical Assy.	500-6189-XX
	Stand-Up Target 1" Spherical (Insert)	**545-6189-XX**

To Replace the « Target Insert » or change Target Orientation :

Items A-E Note: For the Target Assembly use the "**500-**" SPI Part Number(s) shown in the Parts Table below. To receive the Target Assembly with the « Target Insert » « ***Reversed*** » *simply add a **"R"** at the end of the Part Number. See Side View picture left to compare (dashed line shows target reversed).* For just the «Target Insert» use the "**545-**" SPI Part Number.

To reverse it yourself or to just change the insert:

1. With a small flat head screwdriver, push into the small tab at the bottom of the target front and give a slight twist motion to "pop" the two halves.

2. Push the Target Insert bottom in at the same time while you slide the top (front) part up, then let go of the insert as the two halves come apart.

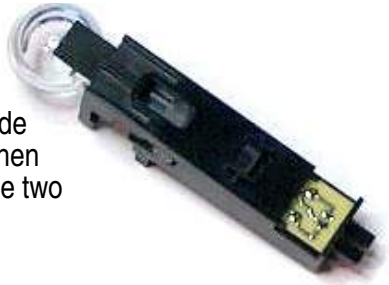

3. Replace target or reinsert it into the other size while sliding the two halves back together.

Note: *If you were reversing the orientation, don't forget to also turn the Switch Actuator PCB **180°**. Test Switch.*

APPENDIX J

Coin Cards (USA & International Pricing Defaults) ▶ For Yellow Stock add -Y to the Part Number

*If more than one Pricing Scheme is available for countries listed, the **F.** listed beside the option, denotes the Factory Default Setting.*

FOR VIEWS OF THE LATEST or OPTIONAL USA, INTERNATIONAL / EURO AND CUSTOM COIN CARDS, VISIT OUR WEBSITE.

Not Shown USA 755-5400-10 Tournament Option $2 = X1; 755-5400-11 Tournament Option $1.50 = X1

USA 10 *F.*	USA 10	USA 2-7 *or* CANADA	*FOR CUSTOM PRICING †*	USA 3 *with* ToPS™	USA 5 *with* ToPS™
NON-TOURNAMENT PLAY $ .75=x1 $2.00=x3 TOURNAMENT PLAY! $1.50=x1	75¢=x1 SUPER VALUE $2.00=x3	50¢=x1	Backside is Blank (Border Only) *Typeset your Custom Pricing*	NON-TOURNAMENT PLAY $ .50=x1 $1.00=x2 TOURNAMENT PLAY! $1.00=x1	NON-TOURNAMENT PLAY $ .50=x1 $2.00=x5 TOURNAMENT PLAY! $1.00=x1
755-5400-11 *Front*	755-5400-11 *Back*	755-5400-02 *Front*	755-5400-01, -02 *or* -04 *Back*	755-5400-03 *or* -09 *Front*	755-5400-03 *Back / -08 Front*
AUSTRALIA 1 *F.*	**AUSTRALIA 2**	**CROATIA**	*FOR CUSTOM PRICING †*	**DENMARK 1** *F.*	**DENMARK 2**
$1.00=x1 SUPER VALUE $2.00=x3	$1.00=x1	3 KUNA=x1 5 KUNA=x2	Backside is Blank (Border Only) *Typeset your Custom Pricing*	Kr.3,00=x1 Kr.5,00=x2	Kr.2,00=x1 Kr.5,00=x3 Kr.10,00=x7
755-5406-00 *Front*	755-5406-00 *Back*	755-5410-00 *Front*	755-5410-00 *Back*	755-5402-00 *Front*	755-5402-00 *Back*
JAPAN 1	**JAPAN 2** *F.*	**MIDDLE EAST**	*ANY COUNTRY CAN USE*	**NEW ZEALAND 1** *F.*	**NEW ZEALAND 2**
¥100=x1	¥100=x1 ¥200=x3	TOKEN=x1	COIN=x1	$1.00=x1	$1.00=x1 SUPER VALUE $2.00=x3
755-5408-01 *Front*	755-5408-01 *Back*	755-5400-06 *Front*	*755-5400-06 Back*	*755-5406-00 Back*	755-5406-00 *Front*
NORWAY 1 *F.*	**NORWAY 2**	**RUSSIA** *F.*	**RUSSIA (ALTERNATE)**	**SOUTH AFRICA**	*FOR CUSTOM PRICING †*
Kr. 10,00=x1	Kr. 10,00=x1 Kr.20,00=x3	5 Рублей=x1	Жетон=x1	R2=x1	Backside is Blank (Border Only) *Typeset your Custom Pricing*
755-5403-01 *Front*	755-5403-01 *Back*	755-5411-00 *Front*	755-5411-00 *Back*	755-5409-01 *Front*	755-5409-01 *Back*
SWEDEN 1 *F.*	**SWEDEN 2**	**SWITZERLAND 1** *F.*	**SWITZERLAND 2**	**TAIWAN**	*FOR CUSTOM PRICING †*
10,00 kr.=x1 15,00 kr.=x2 20,00 kr.=x3	5,00 kr.=x1	sf 1,00=x1 sf 5,00=x6	sf 1,00=x1 sf 2,00=x3 sf 5,00=x9	TWD10=x1	Backside is Blank (Border Only) *Typeset your Custom Pricing*
755-5404-00 *Front*	755-5404-00 *Back*	755-5405-00 *Front*	755-5405-00 *Back*	755-5412-00 *Front*	755-5412-00 *Back*
UK 1	**UK 3**	**UK 5** *F.*	*FOR CUSTOM PRICING †*		
£1.00=x3 £2.00=x7	£ .50=x1 £1.00=x2 £2.00=x5	£1.00=x1 £2.00=x3	Backside is Blank (Border Only) *Typeset your Custom Pricing*		
755-5407-00 *Front*	755-5407-00 *Back*	755-5407-01 *Front*	755-5407-01 *Back*		

Not Shown EURO 755-5401-20 Tournament Custom (can fill in your own pricing).

Appendix J Notes:

1. Coin Card on Game is determined by original shipping country destination.
2. Optional Coin Card(s), are available via your distributor or via free download @ www.sternpinball.com/**coinagecards.shtml**.

Older style Coin Cards (foreign or domestic) not available on our website or no longer available through your distributor, are obsolete.

3. Coin Cards which have a Blank Backside *can be used for* †***Custom Pricing***.

EURO 1	EURO 2	EURO 3	EURO 4	EURO 5	EURO 6
€ .50=x1	€ .50=x1 €1.00=x2 €2.00=x5	€ .50=x1 €1.00=x3	€ .50=x1 €1.00=x2 €2.00=x6	€ .50=x1 €1.00=x3 €2.00=x7	€ .50=x2
755-5401-01 *1-Side Only*	755-5401-02 *1-Side Only*	755-5401-03 *1-Side Only*	755-5401-04 *1-Side Only*	755-5401-05 *1-Side Only*	755-5401-06 *1-Side Only*
EURO 7	**EURO 8**	**EURO 9**	**EURO 10**	**EURO 11**	**EURO 12**
€1.00=x1 €4.00=x5	€1.00=x1 €2.00=x3	€1.00=x1 €1.50=x2 €2.00=x3	€1.00=x1 €2.00=x3 €3.00=x7	€1.00=x1 €2.00=x4	€1.00=x2 €4.00=x9
755-5401-07 *1-Side Only*	755-5401-08 *1-Side Only*	755-5401-09 *1-Side Only*	755-5401-10 *1-Side Only*	755-5401-11 *1-Side Only*	755-5401-12 *1-Side Only*

◣ EURO FACTORY DEFAULT SUMMARY TABLE ◢

EURO 1	EURO 2	EURO 3	EURO 4	EURO 5	EURO 6	EURO 7	EURO 8	EURO 9	EURO 10	EURO 11	EURO 12
BELGIUM ITALY 1 PORTUGAL	*GERMANY 2*	*NETHERLANDS SPAIN*			*GREECE*		*FINLAND*	*AUSTRIA*	*FRANCE*		

Section ***3***, *Chapter* ***4***, ***GO TO ADJUSTMENTS MENU***, *Adj.* ***18***, ***Game Pricing***, ***USA & International (non-Euro) and Euro 1-12 Summary & International (Euro) Standard Pricing Select Tables***, *summarizes Standard or Custom Pricing Schemes & the Dip Switch Setting required.*

SWITCH MENU: SWITCH, ACTIVE & DEDICATED

SWITCH MATRIX GRID & DEDICATED SWITCHES (for notes & locations, see Page DR. 4 or 17)

Column (Drive) / Row (Return)	1: Q1 GRN-BRN CN5-P1	2: Q2 GRN-RED CN5-P3	3: Q3 GRN-ORG CN5-P4	4: Q4 GRN-YEL CN5-P5	5: Q5 GRN-BLK CN5-P6	6: Q6 GRN-BLU CN5-P7	7: Q7 GRN-VIO CN5-P8	8: Q8 GRN-GRY CN5-P9
1: U400 WHT-BRN CN7-P9	1 Cabinet Side LT BUTTON (UK ONLY)	9 NOT USED	17 Below P/F TOP DROP TARGET (DOTS)	25 Below P/F RIGHT ORBIT	33 Above P/F LEFT SPINNER	41 NOT USED	49 Below P/F LEFT BUMPER	57 Below P/F LEFT OUTLANE
Sw. Part Number:	180-5160-01		180-5158-00	500-6227-02	180-5010-04		180-5015-04	500-6227-01
2: U400 WHT-RED CN7-P8	2 Coin Door 4TH COIN SLOT	10 NOT USED	18 Below P/F MIDDLE DROP TARGET (DOTS)	26 Below P/F LEFT ORBIT	34 Above P/F LOWER ACCELERATOR RIGHT (OPTO)	42 Above P/F RIGHT SPINNER	50 Below P/F RIGHT BUMPER	58 Below P/F LEFT RETURN LANE
Sw. Part Number:	180-5204-00		180-5158-00	500-6227-02	*See Sw. 34 Note*	180-5010-04	180-5015-04	500-6227-02
3: U400 WHT-ORG CN7-P7	3 Coin Door 6TH COIN SLOT	11 Below P/F 4-BALL TROUGH #1 (LEFT)	19 Below P/F BOTTOM DROP TARGET (DOTS)	27 Below P/F PIT LOCK MIDDLE	35 Above P/F LOWER ACCELERATOR MID. (OPTO)	43 Below P/F RIGHT STANDUP	51 Below P/F BOTTOM BUMPER	59 Below P/F LEFT SLINGSHOT
Sw. Part Number:	*Future Use*	180-5119-02	180-5158-00	180-5179-00	*See Sw. 35 Note*	500-5857-06	180-5015-04	180-5054-00 (x2)
4: U400 WHT-YEL CN7-P6	4 Coin Door RIGHT COIN SLOT	12 Below P/F 4-BALL TROUGH #2	20 Above P/F WINDMILL MOTOR OPTO	28 Below P/F PIT LOCK TOP	36 Below P/F TEST CAR STANDUP X2	44 Below P/F CENTER STANDUP	52 Below P/F GARAGE VUK (DOTS)	60 Below P/F RIGHT OUTLANE
Sw. Part Number:	180-5204-00	180-5119-02	*See Sw. 20 Note*	180-5178-00	515-5162-06	500-5857-06	180-5116-01	500-6227-02
5: U401 WHT-GRN CN7-P5	5 Coin Door CENTER COIN SLOT / DBA	13 Below P/F 4-BALL TROUGH #3	21 Backpanel LEFT RAMP MAKE OPTO	29 Below P/F MIDWAY EJECT (DOTS)	37 Above/Below LOWER ACCELERATOR LEFT (OPTO)	45 Below P/F LEFT STANDUP	53 In Cabinet *SLAM TILT (OPT)* (KIT)	61 Below P/F RIGHT RETURN LANE
Sw. Part Number:	180-5204-00	180-5119-02	*See Sw. 21 Note*	180-5116-01	See Sw. 37 Note	500-5857-06	180-	500-6227-01
6: U401 WHT-BLU CN7-P3	6 Coin Door LEFT COIN SLOT	14 Below P/F 4-BALL TROUGH VUK OPTO	22 NOT USED	30 Below P/F TRACK EXIT POPPER (DOTS)	38 Below P/F CAPTIVE BALL STANDUP	46 NOT USED	54 In Cabinet START BUTTON	62 Below P/F RIGHT SLINGSHOT
Sw. Part Number:	180-5204-00	*See Sw. 14 Note*		180-5116-01	500-5232-06		180-5174-00	180-5054-00 (x2)
7: U401 WHT-VIO CN7-P2	7 Coin Door 5TH COIN SLOT	15 Below P/F 4-BALL STACKING OPTO	23 Above P/F TRUCK RAMP KICKER	31 NOT USED	39 Below P/F CAR MECH DOWN	47 Above P/F UPPER ACCELERATOR TOP (OPTO)	55 In Cabinet *TOURNA-MENT START* (KIT)	63 NOT USED
Sw. Part Number:	*Future Use*	*See Sw. 15 Note*	180-5057-00		180-5201-00	See Sw. 47 Note	180-5174-00	
8: U401 WHT-GRY CN7-P1	8 Cabinet Side RT BUTTON (UK ONLY)	16 Above P/F SHOOTER LANE	24 Above P/F RIGHT RAMP (TO) DIVERTER	32 Above/Below PIT LOCK BOTTOM (OPTO)	40 Below P/F TEST CAR	48 Above/Below UPPER ACCELERATOR BOT. (OPTO)	56 In Cabinet PLUMB BOB TILT	64 NOT USED
Sw. Part Number:	180-5160-01	180-5200-00	180-5010-04	See Sw. 32 Note	180-5010-04	See Sw. 48 Note	*See Sw. 56 Note*	

GROUND / IC U206 INPUTS	GROUND BLK CN6-P1, -P11
1: U206 GRY-BRN CN6-P2	DS-1 on Cabinet Side #1 LEFT FLIPPER BUTTON
Sw. Part Number:	180-5160-01
2: U206 GRY-RED CN6-P3	DS-2 Below Playfield #2 LEFT FLIPPER E.O.S (End-of-Stroke)
Sw. Part Number:	180-5149-00 *on Flipper*
3: U206 GRY-ORG CN6-P4	DS-3 on Cabinet Side #3 RIGHT FLIPPER BUTTON
Sw. Part Number:	180-5160-01
4: U206 GRY-YEL CN6-P6	DS-4 Below Playfield #4 RIGHT FLIPPER E.O.S. (End-of-Stroke)
Sw. Part Number:	180-5149-00 *on Flipper*
5: U206 GRY-GRN CN6-P7	DS-5 NOT USED
Sw. Part Number:	
6: U206 GRY-BLU CN6-P8	DS-6 on Coin Door #6 VOLUME (RED BUTTON) (In Test: LEFT)
Sw. Part Number:	180-5192-02
7: U206 GRY-VIO CN6-P9	DS-7 on Coin Door #7 SERV. CRED. (GREEN BUTTON) (In Test: RIGHT)
Sw. Part Number:	180-5192-04
8: U206 GRY-BLK CN6-P10	DS-8 on Coin Door #8 BEGIN TEST (BLACK BUTTON) (In Test: ENTER)
Sw. Part Number:	180-5192-00

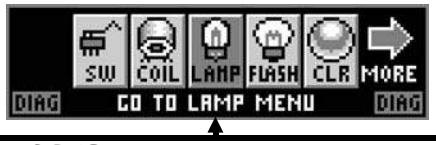

LAMP MENU: ONE, ALL, ROW & COLUMN

LAMP MATRIX GRID (for notes & locations, see Page DR. 5 or 23)

Column (18v) / Row (Ground)	1: U17 YEL-BRN J13-P9	2: U16 YEL-RED J13-P8	3: U15 YEL-ORG J13-P7	4: U14 YEL-BLK J13-P6	5: U13 YEL-GRN J13-P5	6: U12 YEL-BLU J13-P4	7: U11 YEL-VIO J13-P3	8: U10 YEL-GRY J13-P1
1: Q33 RED-BRN J12-P1	1 #44 Clear Bulb RACE POSITION 10	2 #555 Clear Bulb VICTORY LAP	3 #555 Clear Bulb HAPPY HOUR*	4 #555 Clear Bulb 100K	5 #555 Clear Bulb STANDUP LEFT	6 #555 Clear Bulb (R) ACE	7 #555 White LED LEFT POP (DOTS)	8 #555 Clear Bulb SPECIAL & MILLIONS
2: Q34 RED-BLK J12-P2	9 #555 Clear Bulb RACE POSITION 9	10 #555 Clear Bulb ROAD COURSE*	11 #555 Clear Bulb INFIELD PARTY	12 #555 Clear Bulb 150K	13 #555 Clear Bulb 100K	14 #555 Clear Bulb R (A) CE	15 #555 White LED RIGHT POP (DOTS)	16 #555 Clear Bulb GARAGE
3: Q35 RED-ORG J12-P3	17 #44 Clear Bulb RACE POSITION 8	18 #555 Clear Bulb 2X HAULER MILES	19 #555 Clear Bulb SHORT TRACK*	20 #555 Clear Bulb 200K	21 #555 Clear Bulb 150K	22 #555 Clear Bulb RA (C) E	23 #555 White LED BOTTOM POP (DOTS)	24 #555 Clear Bulb FUEL
4: Q36 RED-YEL J12-P4	25 #555 Clear Bulb RACE POSITION 7	26 #555 Clear Bulb COLLECT R-A-C-E	27 #44 Clear Bulb TEST CAR	28 #555 Clear Bulb 250K	29 #555 Clear Bulb 200K	30 #555 Clear Bulb RAC (E)	31 #44 Clear Bulb (C) HAMP #1	32 #44 Yellow Bulb PIT ROAD SIGN
5: Q37 RED-GRN J12-P5	33 #44 Clear Bulb RACE POSITION 6	34 #555 Clear Bulb JACK POT	35 #555 Clear Bulb HAULER RIDE	36 #555 Clear Bulb HARD RACING	37 #555 Clear Bulb 250K	38 #555 Clear Bulb SPIN	39 #44 Clear Bulb C (H) AMP #1	40 #44 Clear Bulb MOVE UP
6: Q38 RED-BLU J12-P6	41 #555 Clear Bulb RACE POSITION 5	42 #555 Clear Bulb BONUS JACKPOT	43 #555 Clear Bulb LIGHT EXTRA BALL	44 #555 Clear Bulb COLLECT R-A-C-E	45 #555 Clear Bulb SPEED SHOTS	46 #555 Clear Bulb JACK POT	47 #44 Clear Bulb CH (A) MP #1	48 #555 Clear Bulb CHAMP #1
7: Q39 RED-VIO J12-P8	49 #44 Clear Bulb RACE POSITION 4	50 #555 Clear Bulb MULTI BALL	51 #44 Clear Bulb BUMP 'N RUN*	52 #555 Clear Bulb JACK POT	53 #555 Clear Bulb COLLECT R-A-C-E	54 #555 Clear Bulb EXTRA BALL	55 #44 Clear Bulb CHA (M) P #1	56 #555 Clear Bulb SCANNER
8: Q40 RED-GRY J12-P9	57 #555 Clear Bulb RACE POSITION 3	58 #555 Clear Bulb LOCK	59 #555 Clear Bulb RIGHT SIDES ONLY*	60 #44 Clear (X2) SPINNERS X2 (@ MAX)	61 #555 Clear Bulb JACK POT	62 #555 Clear Bulb MODE BONUS	63 #44 Clear Bulb CHAM (P) #1	64 #555 Clear Bulb JACK POT
9: Q41 RED-WHT J12-P10	65 #44 Clear Bulb RACE POSITION 2	66 #555 Clear Bulb COLLECT R-A-C-E	67 #555 Clear Bulb SUPER FAN	68 #555 Clear Bulb 2 TO GO	69 #555 Clear Bulb LEFT RAMP STANDUP (LEFT)	70 #555 Clear Bulb COLLECT R-A-C-E	71 #44 Clear Bulb CHAMP (#1)	72 #555 Clear Bulb SHOOT AGAIN
10: Q42 RED J12-P11	73 #555 Clear Bulb RACE POSITION 1	74 #555 Clear Bulb JACK POT	75 #555 Clear Bulb GAS 'N GO*	76 #555 Clear Bulb 1 TO GO	77 #555 Clear Bulb LEFT RAMP STANDUP (RT)	78 #555 Clear Bulb SUPER JACK POT	79 *OPTIONAL* *TOURNAMENT BUTTON*	80 #555 Clear Bulb START BUTTON

▼ U.S. ▼
Customary
Inch Ruler

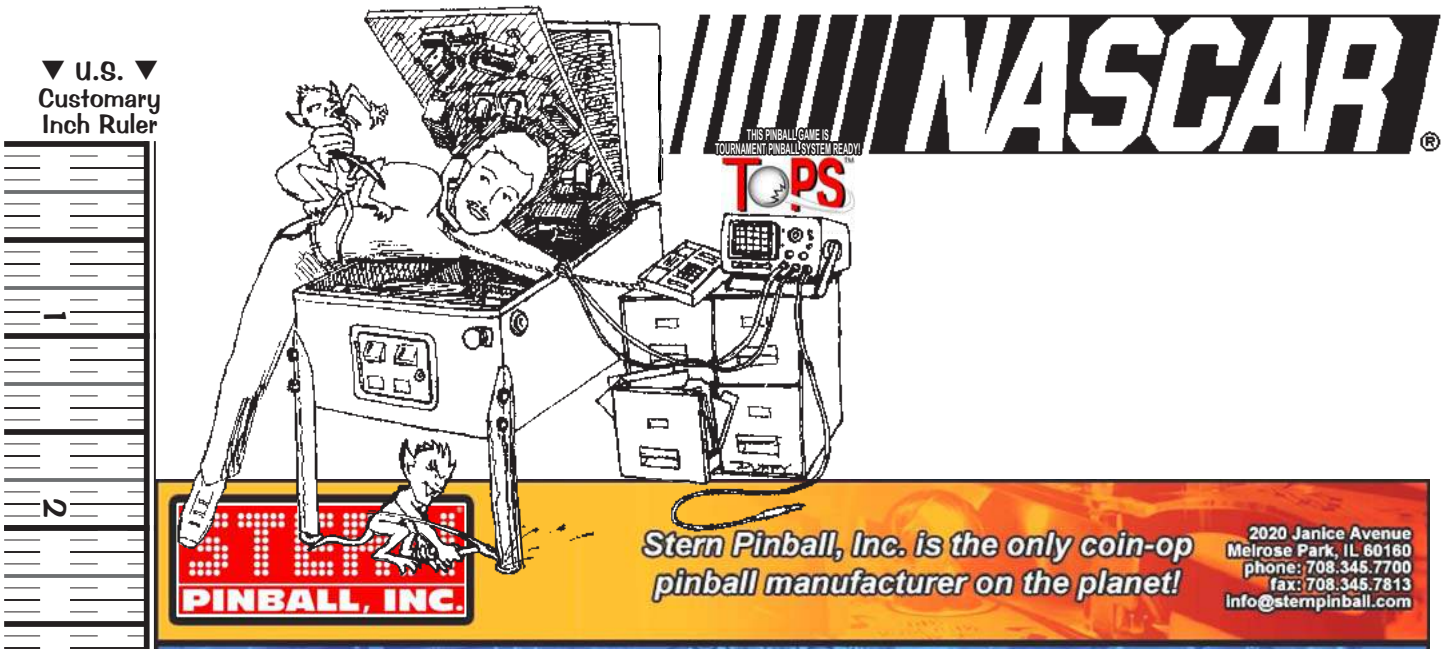

Tech. Support & Parts Sales | Distributors | Pinball Links | Stern Info | Tournaments | Tour | Game Archive | Contact Us | Home

Technical Support & Parts Sales

2002, 2003 (2-Disc Set) & 2004 (2-Disc Set) CD-Roms are now available! *Click year for more info!*

We at STERN Pinball continuously strive to provide our distributors, operators, and game owners with the best technical support possible. We, therefore, have provided you with the service options listed below. If your game requires parts and/or service, please contact your nearest STERN Pinball distributor (See our Distribution List). For any additional assistance, contact our technical service staff at 1-800-KICKERS (1-800-542-5377) or by e-mail at parts.service@sternpinball.com.

If your STERN Pinball is in need of repair, please contact your nearest STERN Distributor.

Pinball Game Parts
Offering Service Game Manual excerpts:
Parts Identification & Location, Drawings for Major Assemblies & Ramps and Appendixes A-J *(updated with each game)*

Service Bulletins
Detailing Technical Information, Tips, FYIs, Notices and Updates

ROM Code Library
Offering game code for all Data East®, Sega™ and STERN® Pinballs *(EPROM Programmer required)*

Coinage Cards
Detailing the Country Setting, Pricing Scheme and Dip Switch Setting

Schematics, Theory of Operation and Troubleshooting Tips
Drawings on the White Star Board System™

Tricks & Tips
1st Time Pinball Set-Up / Prev. Maintenance

Track Your Order Via UPS

NTE Semi-Conductor Cross Reference

Radio Shack Component Catalogue

STERN PINBALL, INC.
PARTS SALES & TECHNICAL SUPPORT

Metric Conversion

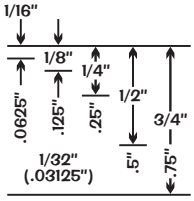

1" = 2.54 cm or 25.4 mm
1 cm = .3937"
1 mm = .03937"

For metric, multiply the inch value by the metric value:

example: **5" X 2.54 cm = 12.7 cm or 127 mm**

For US, multiply the metric value by the inch value:

example: **13 cm X .3937" = 5.1181"**

1-800-⑤④②⑤③⑦⑦ STERN PINBALL, INC

Visit our website **www.sternpinball.com** for Pinball & Redemption game information!

Click Tech Support & Parts Sales *to view, print or download all of the above!*

HELP US, HELP YOU! *If you have any suggestions, questions, need technical advice, find errors or have comments, contact us through our website or call!*

This Game Service Manual and all other documents relating to this product, playfield components, features, rules, programming and operation are subject to change without notice (Service Bulletins, if applicable, available through our website).

CE Games shipped factory direct to Europe from Stern Pinball, Inc. are CE approved and will have an "E" prefix attached to the Serial Number.

780-5086-00